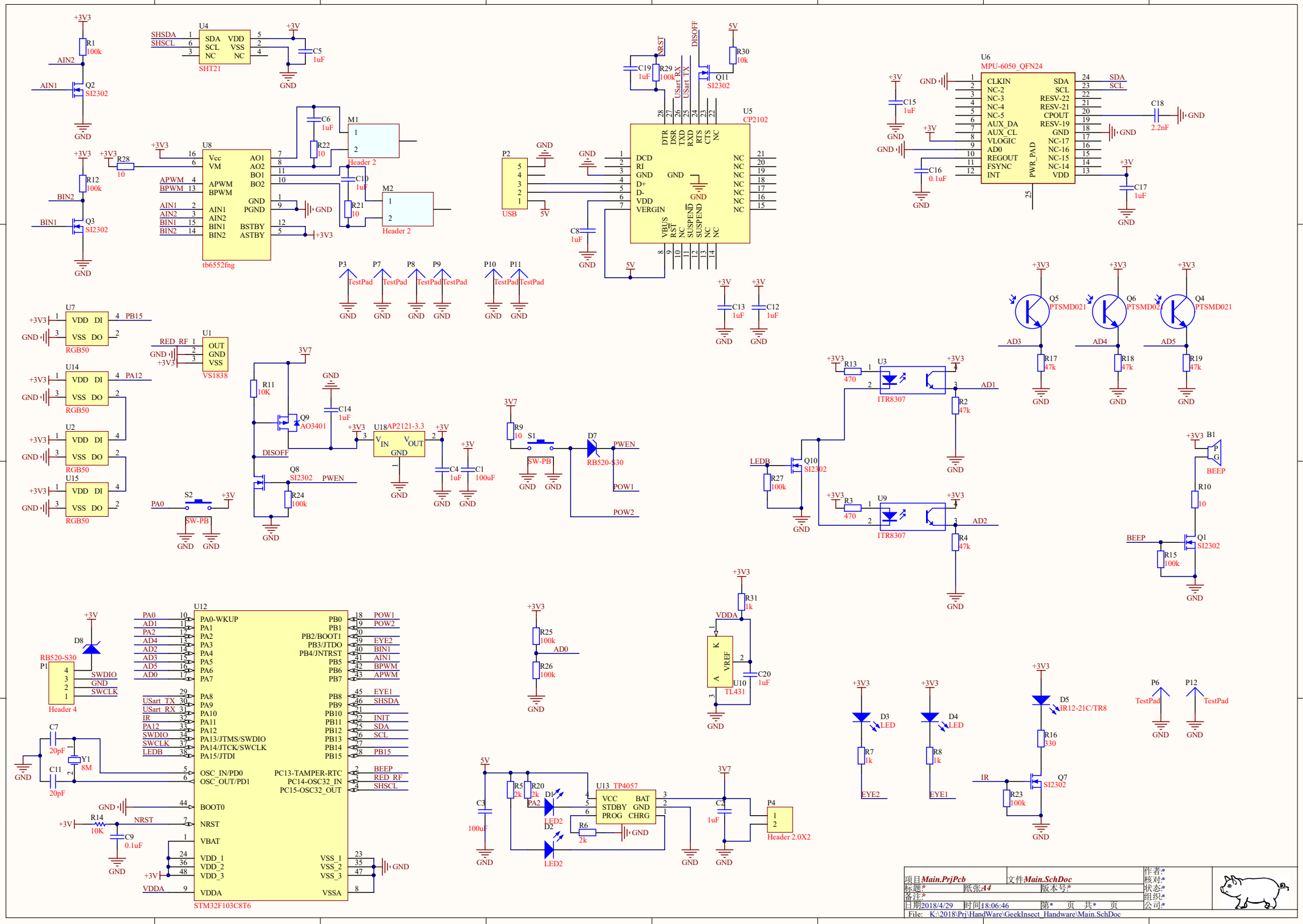
U4
SHT21
SHSDA
SHSCL
SDA VDD
SCL VSS
NC NC
C5 1uF
R1 100k
AIN2
AIN1
Q2 SI2302
R12 100k
BIN2
BIN1
Q3 SI2302
R28 10
U8
tb6552fng
Vcc
VM
APWM
BPWM
AIN1
AIN2
BIN1
BIN2
AO1
AO2
BO1
BO2
GND
PGND
BSTBY
ASTBY
C6 1uF
R22 10
M1
Header 2
C10 1uF
R21 10
M2
Header 2
P2
USB
U5
CP2102
DCD
RI
GND
D+
D-
VDD
VERGIN
DTR
DSR
TXD
RXD
RTS
CTS
NC
VBUS
RST
SUSPEND
C8 1uF
R29 100k
C19 1uF
NRST
DISOFF
Q11 SI2302
R30 10k
U6
MPU-6050_QFN24
CLKIN
NC-2
NC-3
NC-4
NC-5
AUX_DA
AUX_CL
VLOGIC
AD0
REGOUT
FSYNC
INT
SDA
SCL
RESV-22
RESV-21
CPOUT
RESV-19
GND
NC-17
NC-16
NC-15
NC-14
VDD
PWR_PAD
C15 1uF
C16 0.1uF
C18 2.2nF
C17 1uF
P3 TestPad
P7 TestPad
P8 TestPad
P9 TestPad
P10 TestPad
P11 TestPad
C13 1uF
C12 1uF
U7
RGB50
PB15
U14
PA12
U2
U15
U1
VS1838
RED_RF
R11 10K
Q9 AO3401
C14 1uF
U18 AP2121-3.3
VIN VOUT
C4 1uF
C1 100uF
Q8 SI2302
PWEN
R24 100k
S2
PA0
SW-PB
R9 10
S1
D7 RB520-S30
POW1
POW2
Q5 PTSMD021
Q6 PTSMD021
Q4 PTSMD021
AD3
AD4
AD5
R17 47k
R18 47k
R19 47k
R13 470
U3 ITR8307
R2 47k
AD1
LEDB
Q10 SI2302
R27 100k
R3 470
U9 ITR8307
R4 47k
AD2
B1
BEEP
R10 10
Q1 SI2302
R15 100k
D8 RB520-S30
P1
Header 4
SWDIO
SWCLK
U12
STM32F103C8T6
PA0-WKUP
PA1
PA2
PA3
PA4
PA5
PA6
PA7
PA8
PA9
PA10
PA11
PA12
PA13/JTMS/SWDIO
PA14/JTCK/SWCLK
PA15/JTDI
OSC_IN/PD0
OSC_OUT/PD1
BOOT0
NRST
VBAT
VDD_1
VDD_2
VDD_3
VDDA
VSSA
VSS_1
VSS_2
VSS_3
PB0
PB1
PB2/BOOT1
PB3/JTDO
PB4/JNTRST
PB5
PB6
PB7
PB8
PB9
PB10
PB11
PB12
PB13
PB14
PB15
PC13-TAMPER-RTC
PC14-OSC32_IN
PC15-OSC32_OUT
USart_TX
USart_RX
IR
EYE2
EYE1
INIT
BEEP
RED_RF
SHSCL
C7 20pF
C11 20pF
Y1 8M
R14 10K
C9 0.1uF
R25 100k
R26 100k
AD0
R31 1k
VDDA
U10 TL431
C20 1uF
R5 2k
R20 2k
D1 LED2
D2 LED2
R6 2k
U13 TP4057
VCC BAT
STDBY GND
PROG CHRG
C3 100uF
C2 1uF
P4
Header 2.0X2
D3 LED
D4 LED
R7 1k
R8 1k
D5 IR12-21C/TR8
R16 330
Q7 SI2302
R23 100k
P6 TestPad
P12 TestPad
项目Main.PrjPcb
文件Main.SchDoc
标题*
纸张A4
版本号*
备注*
日期2018/4/29
时间18:06:46
第* 页 共* 页
作者*
核对*
状态*
组织*
公司*
File: K:\2018\Prj\HandWare\GeekInsect_Handware\Main.SchDoc