FCC TEST REPORT

for

Panel PC

MODEL: TCNE1U-21AC-V00H; TXNEXU-XXXX-XXXX
(X=0-9,a-z,A-Z,Blank or Dash)

Issued to:

American Industrial Systems, Inc

1768 McGaw Ave, Irvine, CA 92614

Issued by:

Compliance Certification Services Inc.

Xindian Lab.

No.163-1, Jhongsheng Rd., Xindian Dist.,
New Taipei City, Taiwan.
TEL: 886-2-22170894

FAX: 886-2-22171029

Issued Date: March 26, 2026

Note: This document may be altered or revised by Compliance Certification Services Inc. personnel only, and shall be noted in the revision section of the document. The client should not use it to claim product endorsement by TAF, NIST or any government agencies.

Unless otherwise stated the results shown in this test report refer only to the sample(s) tested and such sample(s) are retained for 90 days only.
除非另有說明，此報告結果僅對測試之樣品負責，同時此樣品僅保留90天。本報告未經本公司書面許可，不可部份複製。
This document is issued by the Company subject to its General Conditions of Service printed overleaf, available on request or accessible at http://www.sgs.com.tw/Terms-and-Conditions and, for electronic format documents, subject to Terms and Conditions for Electronic Documents at http://www.sgs.com.tw/Terms-and-Conditions. Attention is drawn to the limitation of liability, indemnification and jurisdiction issues defined therein. Any holder of this document is advised that information contained hereon reflects the Company's findings at the time of its intervention only and within the limits of client's instruction, if any. The Company's sole responsibility is to its Client and this document does not exonerate parties to a transaction from exercising all their rights and obligations under the transaction documents. This document cannot be reproduced, except in full, without prior written approval of the Company. Any unauthorized alteration, forgery or falsification of the content or appearance of this document is unlawful and offenders may be prosecuted to the fullest extent of the law.

Report No.: TMXD2603000796DE **Ref No.:** TMXD2310004093DE

Revision History

Rev.		Issue Date		Revisions	Effect Page	Revised By
00		October 25, 2023		Initial Issue	ALL	Wendy Wang
01		March 26, 2026		Copy Report	ALL	Wendy Wang

This document cannot be reproduced except in full, without prior written approval of the Company. 本報告未經本公司書面許可，不可部份複製。

TABLE OF CONTENTS

1 TEST RESULT CERTIFICATION 4
2 EUT DESCRIPTION 5
3 TEST METHODOLOGY 6
3.1. DECISION OF FINAL TEST MODE 6
3.2. EUT SYSTEM OPERATION 6
4 SETUP OF EQUIPMENT UNDER TEST 7
4.1. DESCRIPTION OF SUPPORT UNITS 7
4.2. CONFIGURATION OF SYSTEM UNDER TEST 8
5 FACILITIES AND ACCREDITATIONS 9
5.1. FACILITIES 9
5.2. ACCREDITATIONS 9
5.3. MEASUREMENT UNCERTAINTY 9
6 CONDUCTED EMISSION MEASUREMENT 10
6.1. LIMITS OF CONDUCTED EMISSION MEASUREMENT 10
6.2. TEST INSTRUMENTS 10
6.3. TEST PROCEDURES 11
6.4. TEST SETUP 12
6.5. DATA SAMPLE 12
6.6. TEST RESULTS 13
7 RADIATED EMISSION MEASUREMENT 15
7.1. LIMITS OF RADIATED EMISSION MEASUREMENT 15
7.2. TEST INSTRUMENTS 17
7.3. TEST PROCEDURES 18
7.4. TEST SETUP 19
7.5. DATA SAMPLE 20
7.6. TEST RESULTS 21
8 PHOTOGRAPHS OF THE TEST CONFIGURATION 26
APPENDIX 1 - PHOTOGRAPHS OF EUT 29

This document cannot be reproduced except in full, without prior written approval of the Company. 本報告未經本公司書面許可，不可部份複製。

Report No.: TMXD2603000796DE **Ref No.:** TMXD2310004093DE

1 TEST RESULT CERTIFICATION

Product:	Panel PC
Model:	TCNE1U-21AC-V00H; TXNEXU-XXXX-XXXX (X=0-9,a-z,A-Z,Blank or Dash)
Applicant:	**American Industrial Systems, Inc** 1768 McGaw Ave, Irvine, CA 92614
Manufacturer:	**APLEX TECHNOLOGY INC.** 15F,No.150, JIAN YI ROAD, ZHONGHE DIST., NEW TAIPEI CITY, 235 TAIWAN.
Tested:	October 14, 2023

EMISSION			
Standard	**Item**	**Result**	**Remarks**
FCC 47 CFR Part 15 Subpart B, ICES-003 Issue 7-2020 ANSI C63.4-2014	Conducted (Power Port)	PASS	Meet Class B limit
	Radiated	PASS	Meet Class B limit

Statements of Conformity
Determination of compliance is based on the results of the compliance measurement, not taking into account measurement instrumentation uncertainty.

The above equipment has been tested by Compliance Certification Services Inc., and found compliance with the requirements set forth in the technical standards mentioned above. The results of testing in this report apply only to the product/system, which was tested. Other similar equipment will not necessarily produce the same results due to production tolerance and measurement uncertainties.

Approved by:

Stanley Cheng

Stanley Cheng
Supervisor of engineering dept.

Reviewed by:

Eva Fan

Eva Fan
Supervisor of report document dept.

This document cannot be reproduced except in full, without prior written approval of the Company. 本報告未經本公司書面許可，不可部份複製。

2 EUT DESCRIPTION

Product	Panel PC
Model	TCNE1U-21AC-V00H; TXNEXU-XXXX-XXXX (X=0-9,a-z,A-Z,Blank or Dash)
Applicant	American Industrial Systems, Inc
Housing material	Plastic w/ metal plate
Received Date	October 6, 2023
EUT Power Rating	12VDC from AC Adaptor
AC Power During Test	120VAC / 60Hz & 230VAC / 60Hz to AC Adaptor
AC Adaptor Manufacturer	EDAC
AC Adaptor Model	EA11011B-1200
AC Adaptor Power Rating	I/P: 100-240V~, 2.0A, 50-60Hz; O/P: 12VDC, 7.5A
DC Power Cable Type	Unshielded, 1.15m (Non-detachable, with a core)
AC Power Cable Type	Unshielded, 1.8m (Detachable)

Model Differences

Model	Difference	Tested (Check)
TCNE1U-21AC-V00H	Original	☒
TXNEXU-XXXX-XXXX	1. X=0-9,a-z,A-Z,Blank or Dash 2. The manufacturer declares that the serial products are identical to main test sample. For marketing reason, there are different serial numbers.	☐

I/O PORT

I/O PORT TYPES	Q'TY	TESTED WITH
1. DP Port	1	1
2. USB Port	4	4
3. LAN Port	2	2
4. COM Port	1	1
5. Audio Port	1	1
6. SW Port	1	N/A

Note: Client consigns only one model sample to test (Model Number: TCNE1U-21AC-V00H).

This document cannot be reproduced except in full, without prior written approval of the Company. 本報告未經本公司書面許可，不可部份複製。

3 TEST METHODOLOGY

3.1. DECISION OF FINAL TEST MODE

The EUT was tested together with the below additional components, and a configuration, which produced the worst emission levels, was selected and recorded in this report.

The test configuration/ modes are as the following:

Conduction Modes:

1	**DP 3840*2160@60Hz**	**120VAC / 60Hz**
2		**230VAC / 60Hz**

Radiation Modes:

1	**DP 3840*2160@60Hz**	**120VAC / 60Hz**
	DP 3840*2160@60Hz / 1-10GHz	
2	**DP 3840*2160@60Hz**	**230VAC / 60Hz**

Worst:

Conduction: Mode 1

Radiation: Mode 1

3.2. EUT SYSTEM OPERATION

1. Windows 11 boots system.
2. Run Burnintest.exe to activate all peripherals and display “H” pattern on monitor screen.
3. Press the start menu, select executive and type ping 192.168.1.1&2 –t (EUT), ping 192.168.1.99 –t (Server PC).

   Note: Test program is self-repeating throughout the test.

This document cannot be reproduced except in full, without prior written approval of the Company. 本報告未經本公司書面許可，不可部份複製。

4 SETUP OF EQUIPMENT UNDER TEST

4.1. DESCRIPTION OF SUPPORT UNITS

The EUT has been tested as an independent unit together with other necessary accessories or support units. The following support units or accessories were used to form a representative test configuration during the tests.

EUT Devices:

No.	Equipment	Model No.	Brand Name
1	MB	SBC-7130	APLEX
2	CPU (2.0GHz)	Intel Atom® x6211E Processor	Intel
3	Memory (64GB)	DDR4-2400 SDRAM	Transcend
4	Storage (128GB)	SATA3 M.2 2242	Transcend
5	Power Adapter	EA11011B-1200	EDAC
6	LCD Panel (21.5”)	G215HAN01.3	AUO

Peripherals Devices:

No.	Equipment	Model No.	Serial No.	FCC ID / BSMI ID	Brand Name	Data Cable	Power Cord
1	Earphone	SEP912	N/A	N/A	Atayal	Shielded,1.8m	N/A
2-3	USB HDD	TS1TSJ25MC	N/A	N/A	Transcend	Shielded, 1.8m	N/A
4	USB Mouse	M-U0026	N/A	BSMI: T41126	LOGITECH	Shielded, 1.8m	N/A
5	USB Keyboard	Y-U0011	N/A	DOC BSMI: D51160	LOGITECH	Shielded, 1.8m	N/A
6	Monitor	VP28U	KCLMTF168414	R31018	ASUS	Shielded, 1.8m	Unshielded, 1.8m
7	HUB	TL-SX105	221A3A1000134	N/A	TP-LINK	Unshielded, 20m X2	Unshielded, 1.8m
8	Server PC	T3610	57TT032	R33002	DELL	Unshielded, 2.0m	Unshielded, 1.8m
9	COM Loopback	N/A	N/A	N/A	N/A	Shielded, 1.5m	N/A

Note:
1) All the equipment/cables were placed in the worst-case configuration to maximize the emission during the test.
2) Grounding was established in accordance with the manufacturer’s requirements and conditions for the intended use.

This document cannot be reproduced except in full, without prior written approval of the Company. 本報告未經本公司書面許可，不可部份複製。

4.2. CONFIGURATION OF SYSTEM UNDER TEST

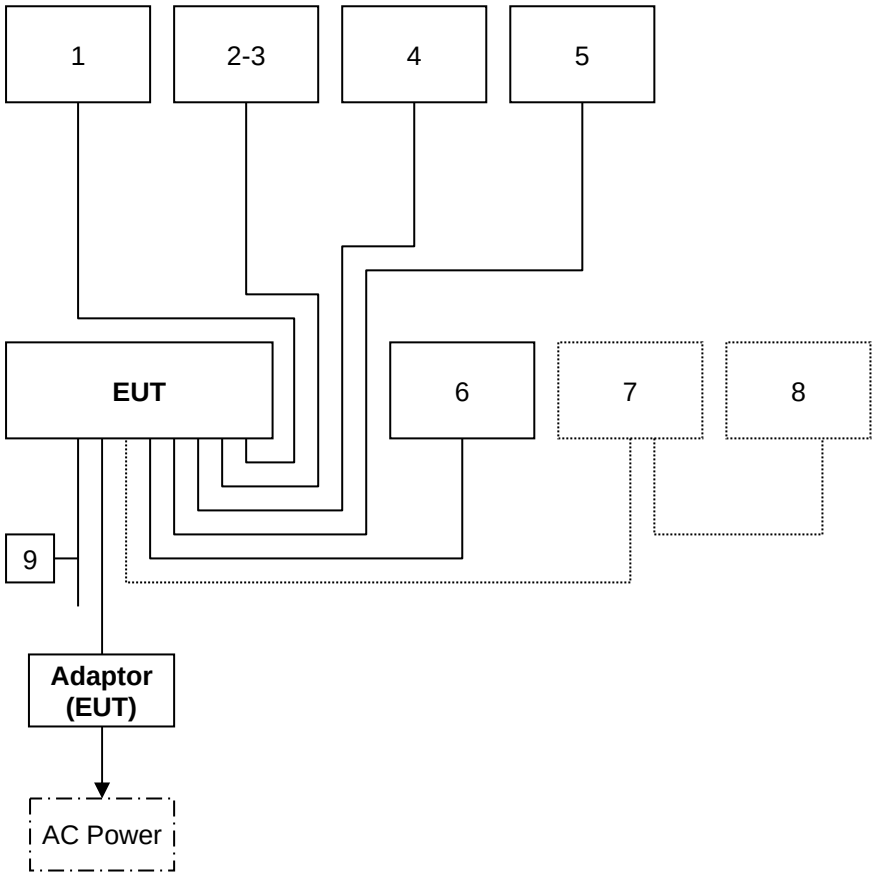

This document cannot be reproduced except in full, without prior written approval of the Company. 本報告未經本公司書面許可，不可部份複製。

5 FACILITIES AND ACCREDITATIONS

5.1. FACILITIES

All measurement facilities used to collect the measurement data are located at CCS Taiwan Xindian Lab. at No.163-1, Jhongsheng Rd., Xindian Dist., New Taipei City, Taiwan.

The sites are constructed in conformance with the requirements of ANSI C63.4 and CISPR Publication 22. All receiving equipment conforms to CISPR 16-1-1, CISPR 16-1-2, CISPR 16-1-3, CISPR 16-1-4 and CISPR 16-1-5.

5.2. ACCREDITATIONS

Our laboratories are accredited and approved by the following accreditation body according to ISO/IEC 17025.

Taiwan	TAF

The measuring facility of laboratories has been authorized or registered by the following approval agencies.

Canada	Industry Canada
Japan	VCCI
Taiwan	BSMI
USA	FCC

5.3. MEASUREMENT UNCERTAINTY

Where relevant, the following measurement uncertainty levels have been estimated for tests performed on the EUT as specified in CISPR 16-4-2:

Measurement	Frequency	Uncertainty
Conducted emissions	0.15MHz ~ 30MHz	± 2.8
Radiated emissions	30MHz ~ 1000MHz	± 5.1
	1000MHz ~ 18000MHz	± 4.6
	18000MHz ~ 40000MHz	± 3.8

This uncertainty represents an expanded uncertainty expressed at approximately the 95% confidence level using a coverage factor of k=2.

Consistent with industry standard (e.g. CISPR 22: 2005, clause 11, Measurement Uncertainty) determining compliance with the limits shall be base on the results of the compliance measurement. Consequently the measure emissions being less than the maximum allowed emission result in this be a compliant test or passing test.

The acceptable measurement uncertainty value without requiring revision of the compliance statement is base on conducted and radiated emissions being less than U_{CISPR} which is 3.8dB(AMN); 5.2dB(OATS) and 5.5dB(1-18GHz) respectively. CCS values (called U_{Lab} in CISPR 16-4-2) is less than U_{CISPR} as shown in the table above. Therefore, MU need not be considered for compliance.

This document cannot be reproduced except in full, without prior written approval of the Company. 本報告未經本公司書面許可，不可部份複製。

6 CONDUCTED EMISSION MEASUREMENT

6.1. LIMITS OF CONDUCTED EMISSION MEASUREMENT

FREQUENCY (MHz)	Class A (dBuV)		Class B (dBuV)	
	Quasi-peak	Average	Quasi-peak	Average
0.15 - 0.5	79	66	66 - 56	56 - 46
0.50 - 5.0	73	60	56	46
5.0 - 30.0	73	60	60	50

NOTE:
(1) The lower limit shall apply at the transition frequencies.
(2) The limit decreases in line with the logarithm of the frequency in the range 0.15 to 0.50 MHz.
(3) All emanations from a class A/B digital device or system, including any network of conductors and apparatus connected thereto, shall not exceed the level of field strengths specified above.

6.2. TEST INSTRUMENTS

Conducted Emission room # B				
Name of Equipment	**Manufacturer**	**Model**	**Serial Number**	**Calibration Due**
Attenuator	MCL	HAT-10	SD-C012	03/19/2024
BNC Cable	EMEC	CFD300-NL	SD-C020	12/29/2023
EMI Test Receiver	R&S	ESR3	102166	03/13/2024
LISN	Schwarzbeck	NSLK 8127	01082	03/21/2024
LISN(EUT)	Schwarzbeck	NSLK 8127	01084	03/21/2024
Thermo-Hygro Meter	Wisewind	N/A	SD-S017	08/15/2024
Test S/W	EZ-EMC Ver.CCS-03A1			

NOTE: 1. The calibration interval of the above test instruments is 12 months and the calibrations are traceable to NML/ROC and NIST/USA.
2. N.C.R = No Calibration Request.

This document cannot be reproduced except in full, without prior written approval of the Company. 本報告未經本公司書面許可，不可部份複製。

6.3. TEST PROCEDURES

Procedure of Preliminary Test

- The EUT and support equipment, if needed, were set up as per the test configuration to simulate typical usage per the user's manual. When the EUT is a tabletop system, a wooden table with a height of 0.8 meters is used and is placed on the ground plane as per ANSI C63.4 (see Test Facility for the dimensions of the ground plane used). When the EUT is a floor standing equipment, it is placed on the ground plane, which has a 12 mm non-conductive covering to insulate the EUT from the ground plane.
- All I/O cables were positioned to simulate typical actual usage as per ANSI C63.4.
- The test equipment EUT installed by AC main power, through a Line Impedance Stabilization Network (LISN), which was supplied power source and was grounded to the ground plane.
- All support equipment power by from a second LISN.
- The test program of the EUT was started. Emissions were measured on each current carrying line of the EUT using an EMI Test Receiver connected to the LISN powering the EUT.
- The Receiver scanned from 150kHz to 30MHz for emissions in each of the test modes.
- During the above scans, the emissions were maximized by cable manipulation.
- The test mode(s) described in Item 3.1 were scanned during the preliminary test.
- After the preliminary scan, we found the test mode described in Item 3.1 producing the highest emission level.
- The worst configuration of EUT and cable of the above highest emission level were recorded for reference of the final test.

Procedure of Final Test

- EUT and support equipment were set up on the test bench as per the configuration with highest emission level in the preliminary test.
- A scan was taken on both power lines, Line 1 and Line 2, recording at least the six highest emissions. Emission frequency and amplitude were recorded into a computer in which correction factors were used to calculate the emission level and compare reading to the applicable limit.
- The test data of the worst-case condition(s) was recorded.

This document cannot be reproduced except in full, without prior written approval of the Company. 本報告未經本公司書面許可，不可部份複製。

6.4. TEST SETUP

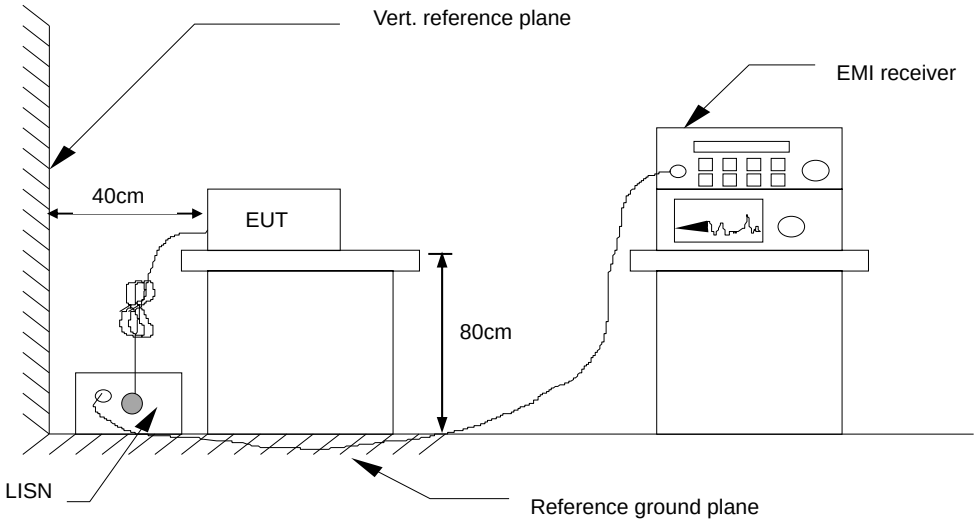

- For the actual test configuration, please refer to the related item – Photographs of the Test Configuration.

6.5. DATA SAMPLE

Freq. (MHz)	Reading (dBuV)	Factor (dB)	Result (dBuV)	Limit (dBuV)	Margin (dB)	Detector (P/Q/A)	Line (L1/L2)
x.xx	42.95	0.55	43.50	56	-12.50	Q	L1

Freq. = Emission frequency in MHz
Reading = Uncorrected Analyzer/Receiver reading
Factor = Insertion loss of LISN + Cable Loss + Pulse Limit
Result = Reading + Factor
Limit = Limit stated in standard
Margin = Reading in reference to limit
P = Peak Reading
Q = Quasi-peak Reading
A = Average Reading
L1 = Hot side
L2 = Neutral side

Calculation Formula

Margin (dB) = Result (dBuV) – Limit (dBuV)

This document cannot be reproduced except in full, without prior written approval of the Company. 本報告未經本公司書面許可，不可部份複製。

6.6. TEST RESULTS

Model No.	TCNE1U-21AC-V00H	**6dB Bandwidth**	9 kHz
Environmental Conditions	24.8°C, 52% RH	**Test Mode**	Mode 1
Tested by	Richard Liang	**Phase**	L1
Standard	FCC CLASS B / ICES-003 CLASS B		

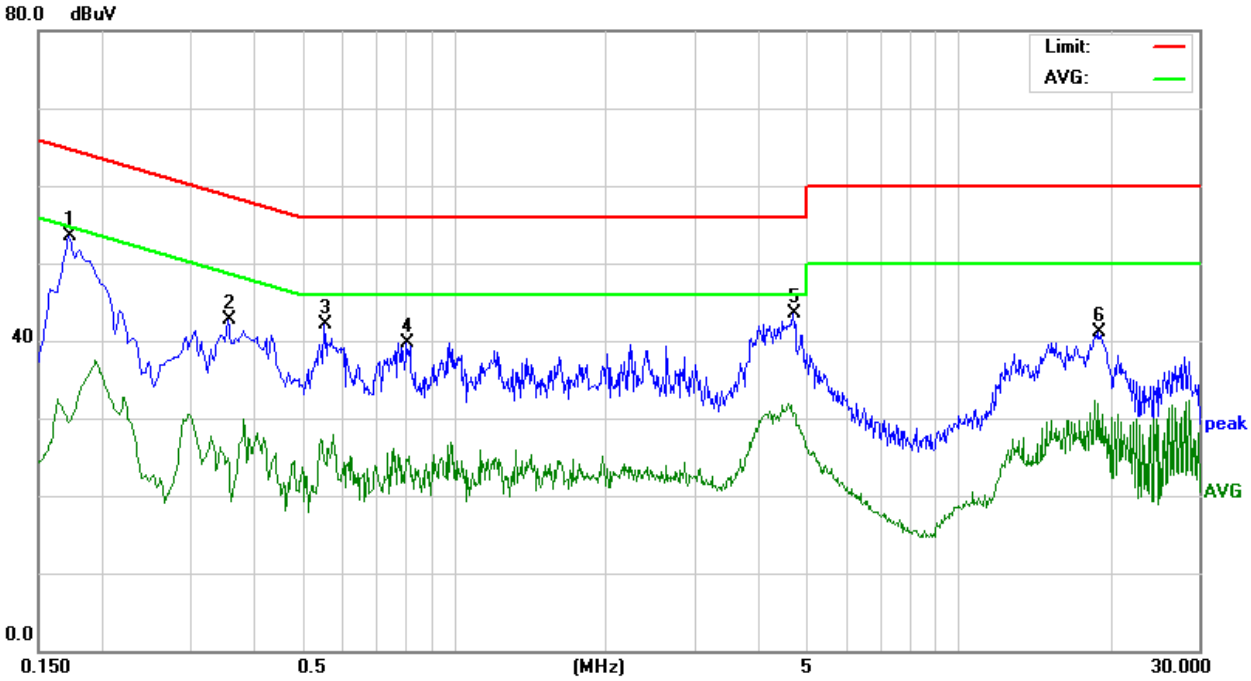

Conducted Emission Readings							
Frequency Range Investigated				**150 kHz to 30 MHz**			
Freq. (MHz)	Reading (dBuV)	Factor (dB)	Result (dBuV)	Limit (dBuV)	Margin (dB)	Detector (P/Q/A)	Line (L1/L2)
0.1725	**43.50**	**10.09**	**53.59**	**64.83**	**-11.24**	**P**	**L1**
0.3570	**32.59**	**10.09**	**42.68**	**58.80**	**-16.12**	**P**	**L1**
0.5550	**32.02**	**10.11**	**42.13**	**56.00**	**-13.87**	**P**	**L1**
0.8070	**29.55**	**10.12**	**39.67**	**56.00**	**-16.33**	**P**	**L1**
4.7085	**33.18**	**10.30**	**43.48**	**56.00**	**-12.52**	**P**	**L1**
18.9285	**30.52**	**10.58**	**41.10**	**60.00**	**-18.90**	**P**	**L1**

Note: 1. L1 = Line One (Live Line) / L2 = Line Two (Neutral Line).

This document cannot be reproduced except in full, without prior written approval of the Company. 本報告未經本公司書面許可，不可部份複製。

Model No.	TCNE1U-21AC-V00H	**6dB Bandwidth**	9 kHz
Environmental Conditions	24.8°C, 52% RH	**Test Mode**	Mode 1
Tested by	Richard Liang	**Phase**	L2
Standard	FCC CLASS B / ICES-003 CLASS B		

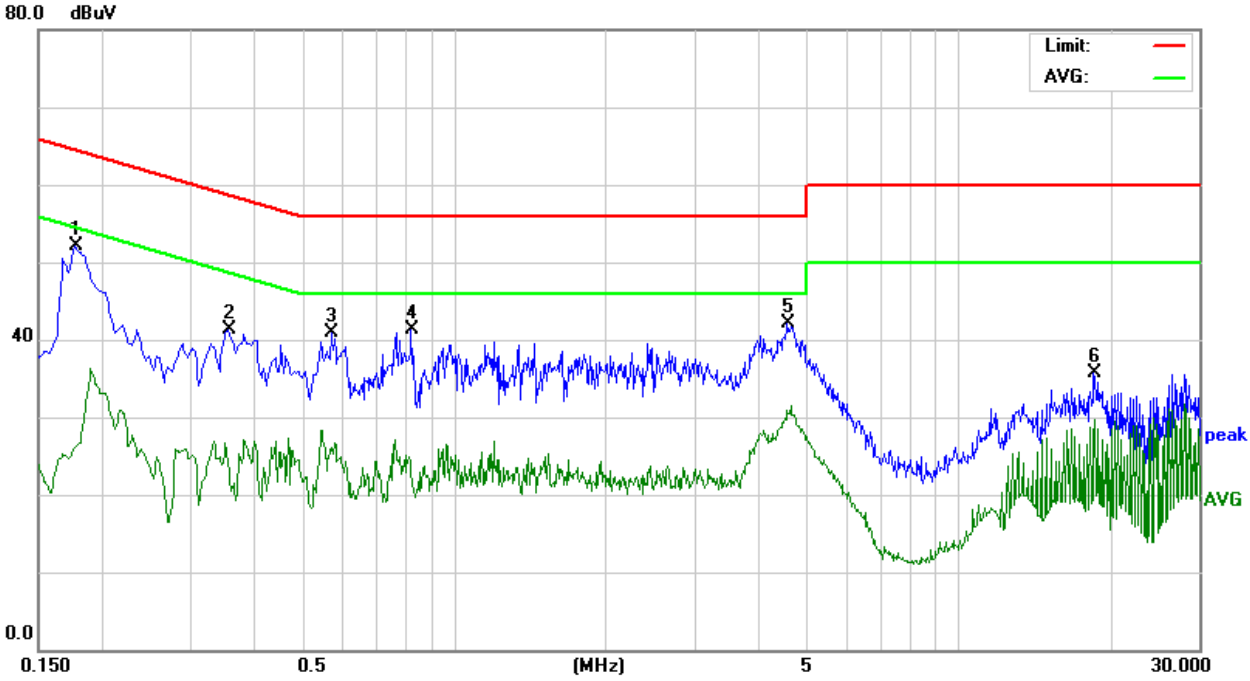

Conducted Emission Readings							
Frequency Range Investigated				**150 kHz to 30 MHz**			
Freq. (MHz)	Reading (dBuV)	Factor (dB)	Result (dBuV)	Limit (dBuV)	Margin (dB)	Detector (P/Q/A)	Line (L1/L2)
0.1770	**41.94**	**10.08**	**52.02**	**64.62**	**-12.60**	**P**	**L2**
0.3570	**31.18**	**10.08**	**41.26**	**58.80**	**-17.54**	**P**	**L2**
0.5730	**30.76**	**10.11**	**40.87**	**56.00**	**-15.13**	**P**	**L2**
0.8250	**31.10**	**10.13**	**41.23**	**56.00**	**-14.77**	**P**	**L2**
4.5825	**31.80**	**10.30**	**42.10**	**56.00**	**-13.90**	**P**	**L2**
18.6180	**25.13**	**10.59**	**35.72**	**60.00**	**-24.28**	**P**	**L2**

Note: 1. L1 = Line One (Live Line) / L2 = Line Two (Neutral Line).

This document cannot be reproduced except in full, without prior written approval of the Company. 本報告未經本公司書面許可，不可部份複製。

7 RADIATED EMISSION MEASUREMENT

7.1. LIMITS OF RADIATED EMISSION MEASUREMENT

FCC 47 CFR Part 15 Subpart B

Below 1GHz (for digital device / CISPR22)

FREQUENCY (MHz)	dBuV/m (At 10m)	
	Class A	Class B
30 ~ 230	40	30
230 ~ 1000	47	37

Limit tables for non-digital device:

Class A Radiated Emission limit at 10m (for others)

Frequency (MHZ)	Field Strength Limit (uV/m)Q.P.	Field Strength Limit (dBuV/m)Q.P.
30 - 88	90	39
88 - 216	150	43.5
216 – 960	210	46.4
Above 960	300	49.5

Class B Radiated Emission limit at 3m (for others)

Frequency (MHZ)	Field Strength Limit (uV/m)Q.P.	Field Strength Limit (dBuV/m)Q.P.
30 - 88	100	40
88 - 216	150	43.5
216 – 960	200	46
Above 960	500	54

Above 1GHz(for all device)

Frequency (MHZ)	Class A (dBuV/m) (At 10m)		Class B (dBuV/m) (At 3m)	
	Average	Peak	Average	Peak
Above 1000	49.5	69.5	54	74

NOTE: (1) The lower limit shall apply at the transition frequencies.
(2) Emission level (dBuV/m) = 20 log Emission level (uV/m).
(3) The measurement above 1GHz is at close-in distances 3m,and determine the limit **L_2** corresponding to the close-in distance **d_2** by applying the following relation: **$L_2 = L_1 (d_1/d_2)$**, where **L_1** is the specified limit in microvolts per metre (**uV/m**) at the distance **d_1** (**10m**), **L_2** is the new limit for distance **d_2** (**3m**).
So the new Class A limit above 1GHz at 3m is as following table:

Frequency (MHZ)	Class A (dBuV/m) (At 3m)	
	Average	Peak
Above 1000	60	80

This document cannot be reproduced except in full, without prior written approval of the Company. 本報告未經本公司書面許可，不可部份複製。

According to FCC Part 15.33 (b), for an unintentional radiator, including a digital device, the spectrum shall be investigated from the lowest radio frequency signal generated or used in the device, without going below the lowest frequency for which a radiated emission limit is specified, up to the frequency shown in the following table:

Highest frequency generated or used in the device or on which the device operates or tunes (MHz)	Upper frequency of measurement range (MHz)
Below 1.705	30
1.705-108	1000
108-500	2000
500-1000	5000
Above 1000	5th harmonic of the highest frequency or 40GHz, whichever is lower

ICES-003 Issue 7-2020

Below 1GHz

Class A Radiated Emission limit

Frequency (MHZ)	(dBuV/m)Q.P. Distances (3m)	(dBuV/m)Q.P. Distances (10m)
30 - 88	50	40
88 - 216	54	43.5
216 - 230	56.9	46.4
230 – 960	57	47
960 - 1000	60	49.5

Class B Radiated Emission limit

Frequency (MHZ)	(dBuV/m)Q.P. Distances (3m)	(dBuV/m)Q.P. Distances (10m)
30 - 88	40	30
88 - 216	43.5	33.1
216 - 230	46	35.6
230 – 960	47	37
960 - 1000	54	43.5

This document cannot be reproduced except in full, without prior written approval of the Company. 本報告未經本公司書面許可，不可部份複製。

Above 1GHz

Frequency (MHZ)	Class A (dBuV/m) (At 3m)		Class B (dBuV/m) (At 3m)	
	Average	Peak	Average	Peak
Above 1000	60	80	54	74

Required highest measurement frequency for radiated emissions

Highest frequency generated or used in the device or on which the device operates or tunes (MHz)	Upper frequency of measurement range (MHz)
Fx-108	1000
108-500	2000
500-1000	5000
Above 1000	5 x FX up to a maximum of 40 GHz

Note: Fx is the highest fundamental frequency generated and/or used in the ITE or digital apparatus under test.

7.2. TEST INSTRUMENTS

Open Area Test Site # H				
Name of Equipment	**Manufacturer**	**Model**	**Serial Number**	**Calibration Due**
Bilog Antenna	Teseq	CBL 6112D	35411	05/03/2024
Cable	EMEC	CFD400E-LW	SD-R074	08/09/2024
EMI Test Receiver	R&S	ESCI	101340	02/03/2024
Pre-Amplifier	HP	8447D	1937A01554	09/20/2024
Thermo-Hygro Meter	Wisewind	201A	No. 03	05/22/2024
Test S/W	EZ-EMC Ver.CCS-03A1			
Chamber # E (Above 1GHz Used)				
Horn Antenna	ETS-Lindgren	3117	00139062	06/07/2024
Microflex Cable x 7m	JMT	LF01	SD-R089	06/06/2024
K-Type Cable x 1m	JMT	LK01	SD-R087	06/06/2024
Pre-Amplifier	Com-Power	PAM-118A	551041	06/06/2024
Signal Analyzer	R&S	FSV40	101269	06/06/2024
Thermo-Hygro Meter	Wisewind	201A	SD-R046	07/23/2024
Test S/W	EZ-EMC Ver.CCS-03A1			

NOTE: 1. The calibration interval of the above test instruments is 12 months and the calibrations are traceable to NML/ROC and NIST/USA.
2. N.C.R = No Calibration Request.

This document cannot be reproduced except in full, without prior written approval of the Company. 本報告未經本公司書面許可，不可部份複製。

7.3. TEST PROCEDURES

Procedure of Preliminary Test

- The equipment was set up as per the test configuration to simulate typical usage per the user's manual. When the EUT is a tabletop system, a wooden turntable with a height of 0.8 meters is used which is placed on the ground plane. When the EUT is a floor standing equipment, it is placed on the ground plane which has a 12 mm non-conductive covering to insulate the EUT from the ground plane.
- Support equipment, if needed, was placed as per ANSI C63.4.
- All I/O cables were positioned to simulate typical usage as per ANSI C63.4.
- The EUT received AC power source from the outlet socket under the turntable. All support equipment power received from another socket under the turntable.
- The antenna was placed at 3 or 10 meter away from the EUT as stated in ANSI C63.4. The antenna connected to the Spectrum Analyzer via a cable and at times a pre-amplifier would be used.
- The Analyzer / Receiver quickly scanned from 30MHz to 40GHz. The EUT test program was started. Emissions were scanned and measured rotating the EUT to 360 degrees and positioning the antenna 1 to 4 meters above the ground plane, in both the vertical and the horizontal polarization, to maximize the emission reading level.
- The test mode(s) described in Item 3.1 were scanned during the preliminary test:
- After the preliminary scan, we found the test mode described in Item 3.1 producing the highest emission level.
- The worst configuration of EUT and cable of the above highest emission level were recorded for reference of the final test.

Procedure of Final Test

- EUT and support equipment were set up on the turntable as per the configuration with highest emission level in the preliminary test.
- The Analyzer / Receiver scanned from 30MHz to 40GHz. Emissions were scanned and measured rotating the EUT to 360 degrees, varying cable placement and positioning the antenna 1 or 1 to 4 meters above the ground plane, in both the vertical and the horizontal polarization, to maximize the emission reading level.
- Recording at least the six highest emissions. Emission frequency, amplitude, antenna position, polarization and turntable position were recorded into a computer in which correction factors were used to calculate the emission level and compare reading to the applicable limit. Below 1GHz the Q.P. reading and above 1GHz the Peak and Average reading are presented.
- The test data of the worst-case condition(s) was recorded.

This document cannot be reproduced except in full, without prior written approval of the Company. 本報告未經本公司書面許可，不可部份複製。

7.4. TEST SETUP

Below 1GHz

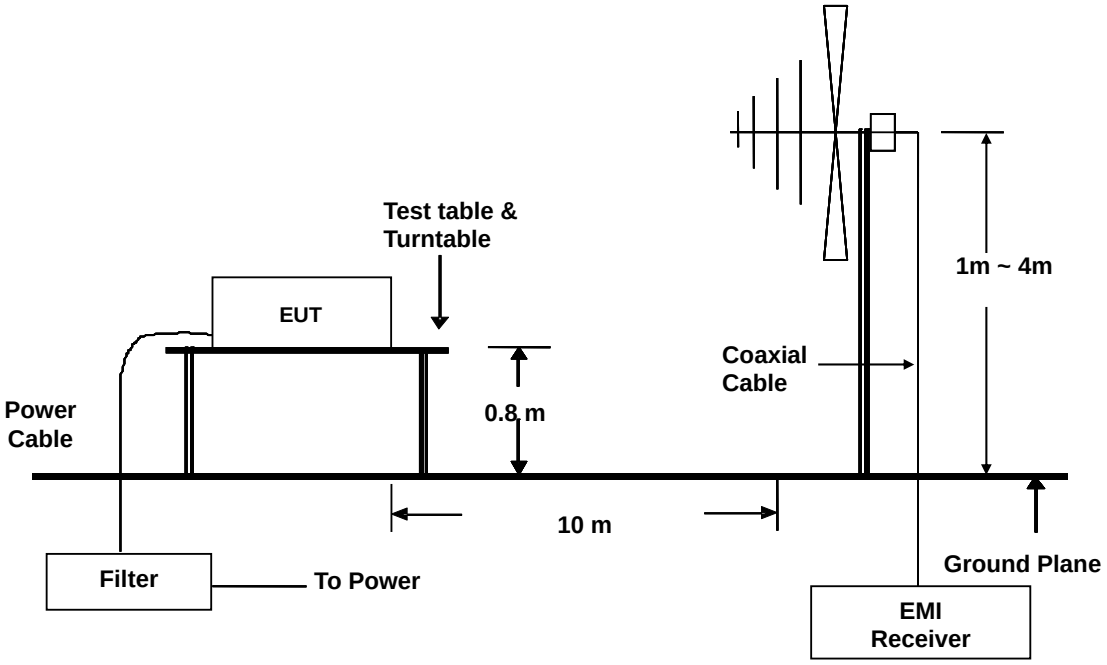

Above 1GHz

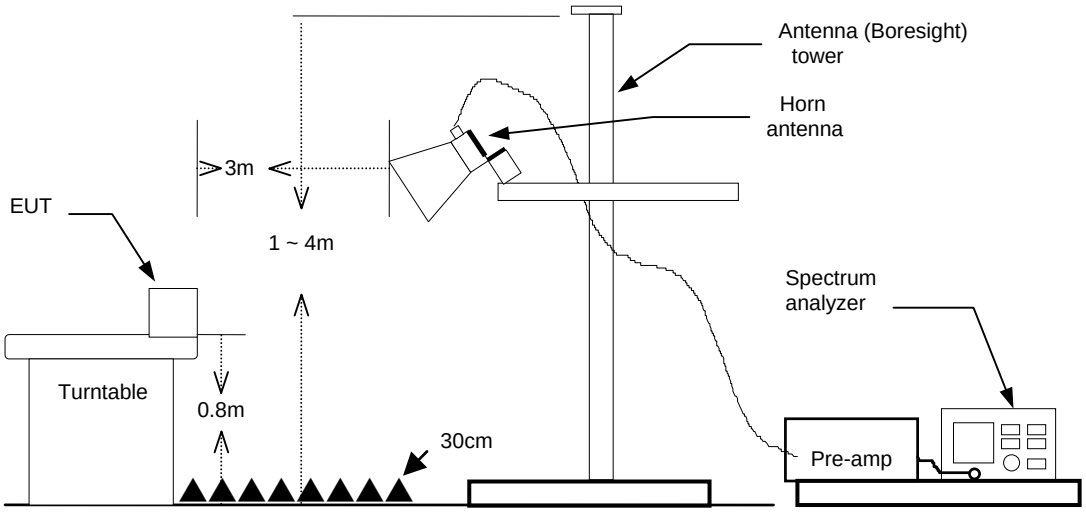

- For the actual test configuration, please refer to the related item – Photographs of the Test Configuration.

This document cannot be reproduced except in full, without prior written approval of the Company. 本報告未經本公司書面許可，不可部份複製。

7.5. DATA SAMPLE

Below 1GHz

Freq. (MHz)	Reading (dBuV)	Factor (dB/m)	Result (dBuV/m)	Limit (dBuV/m)	Margin (dB)	Detector (P/Q)	Pol. (H/V)
x.xx	14.0	12.2	26.2	30	-3.8	Q	H

Above 1GHz

Freq. (MHz)	Reading (dBuV)	Factor (dB/m)	Result (dBuV/m)	Limit (dBuV/m)	Margin (dB)	Detector (P/A)	Pol. (H/V)
x.xx	42.95	0.55	43.50	54	-10.50	A	H

Freq. = Emission frequency in MHz
Reading = Uncorrected Analyzer/Receiver reading
Factor = Antenna Factor + Cable Loss - Amplifier Gain
Result = Reading + Factor
Limit = Limit stated in standard
Margin = Reading in reference to limit
P = Peak Reading
Q = Quasi-peak Reading
A = Average Reading
H = Antenna Polarization: Horizontal
V = Antenna Polarization: Vertical

Calculation Formula

Margin (dB) = Result (dBuV/m) – Limit (dBuV/m)

This document cannot be reproduced except in full, without prior written approval of the Company. 本報告未經本公司書面許可，不可部份複製。

7.6. TEST RESULTS

FCC 47 CFR Part 15 Subpart B

Below 1GHz

Model No.	TCNE1U-21AC-V00H	**Test Mode**	Mode 1
Environmental Conditions	25.2ºC, 52% RH	**6dB Bandwidth**	120 kHz
Antenna Pole	Vertical	**Antenna Distance**	10m
Detector Function	Quasi-peak.	**Tested by**	Richard Liang
Standard	FCC CLASS B W/ CISPR 22 CLASS B LIMIT		

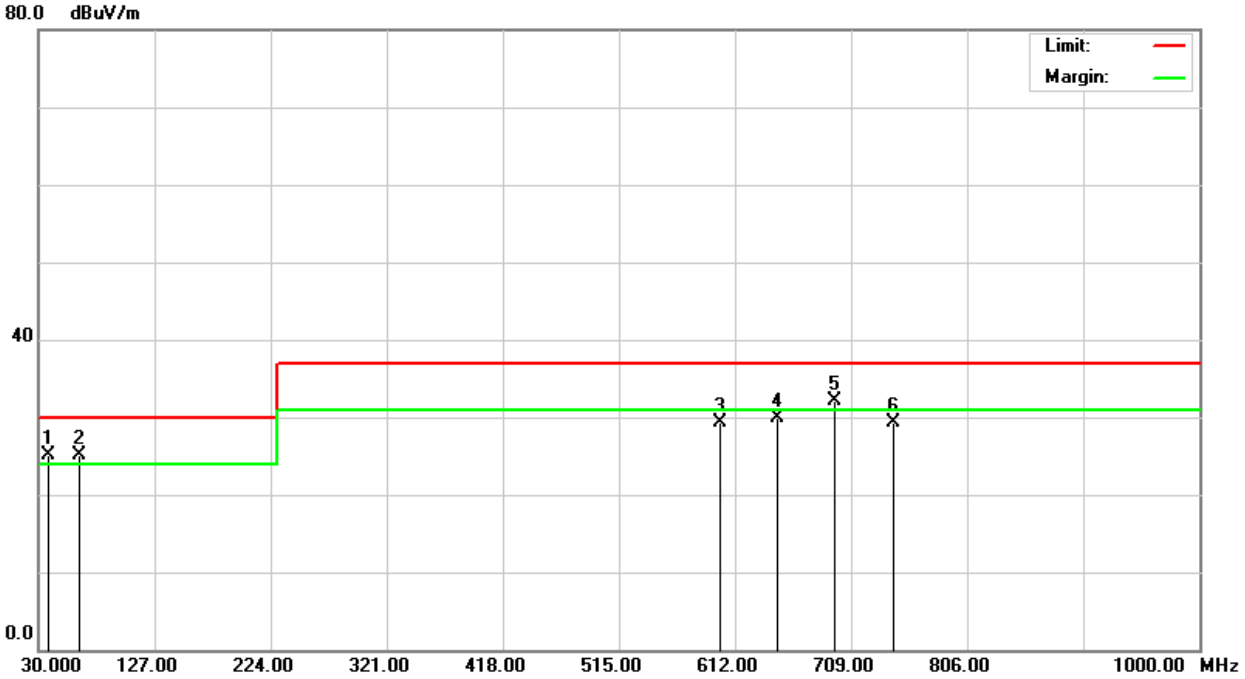

Radiated Emission Readings									
Frequency Range Investigated				**30 MHz to 1000 MHz at 10m**					
Freq. (MHz)	Reading (dBuV)	Factor (dB/m)	Result (dBuV/m)	Limit (dBuV/m)	Margin (dB)	Height (cm)	Degree (°)	Detector (P/Q)	Pol. (H/V)
38.4100	**31.60**	**-6.55**	**25.05**	**30.00**	**-4.95**	**100**	**230**	**Q**	**V**
64.2100	**39.30**	**-14.28**	**25.02**	**30.00**	**-4.98**	**100**	**44**	**Q**	**V**
599.9900	**27.70**	**1.51**	**29.21**	**37.00**	**-7.79**	**400**	**246**	**Q**	**V**
648.0200	**27.40**	**2.46**	**29.86**	**37.00**	**-7.14**	**400**	**281**	**Q**	**V**
696.0100	**30.10**	**2.07**	**32.17**	**37.00**	**-4.83**	**400**	**128**	**Q**	**V**
743.9600	**25.60**	**3.68**	**29.28**	**37.00**	**-7.72**	**400**	**61**	**Q**	**V**

Note: 1. 30MHz to 1000MHz test is Applicable CISPR 22 standard.
2. P= Peak Reading; Q= Quasi-peak Reading.

This document cannot be reproduced except in full, without prior written approval of the Company. 本報告未經本公司書面許可，不可部份複製。

Report No.: TMXD2603000796DE **Ref No.:** TMXD2310004093DE

Model No.	TCNE1U-21AC-V00H	**Test Mode**	Mode 1
Environmental Conditions	25.2°C, 52% RH	**6dB Bandwidth**	120 kHz
Antenna Pole	Horizontal	**Antenna Distance**	10m
Detector Function	Quasi-peak.	**Tested by**	Richard Liang
Standard	FCC CLASS B W/ CISPR 22 CLASS B LIMIT		

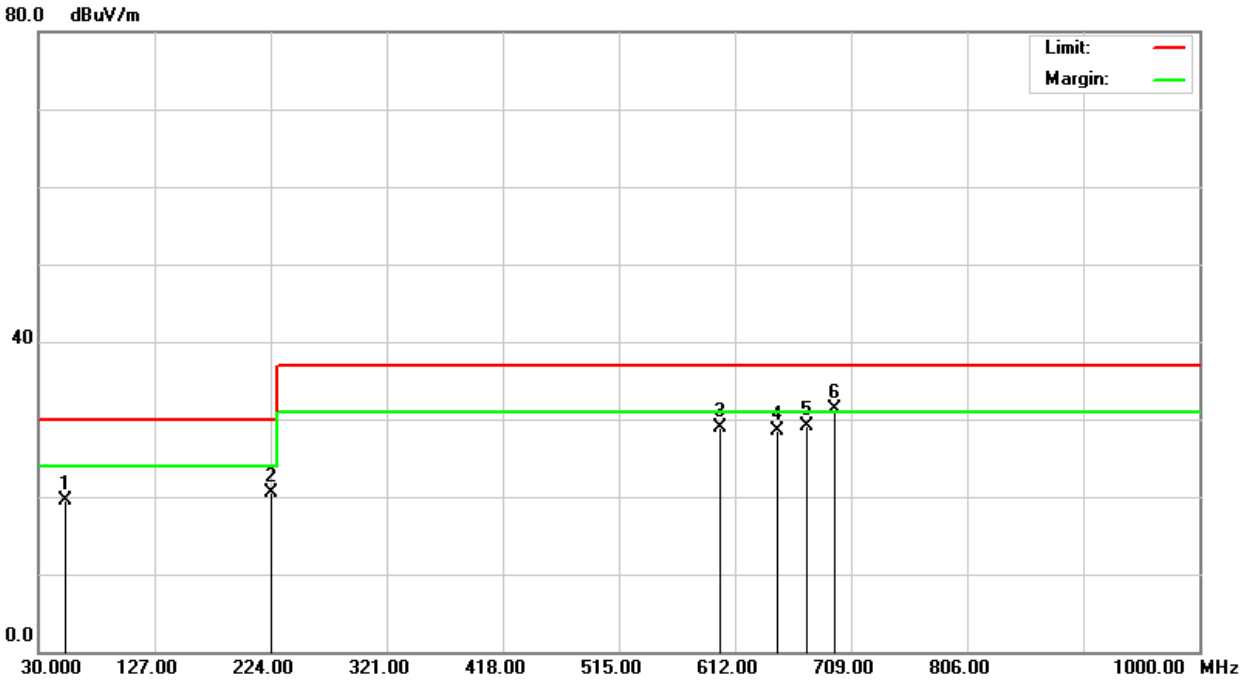

Radiated Emission Readings									
Frequency Range Investigated				**30 MHz to 1000 MHz at 10m**					
Freq. (MHz)	Reading (dBuV)	Factor (dB/m)	Result (dBuV/m)	Limit (dBuV/m)	Margin (dB)	Height (cm)	Degree (°)	Detector (P/Q)	Pol. (H/V)
52.2400	**32.50**	**-13.07**	**19.43**	**30.00**	**-10.57**	**400**	**238**	**Q**	**H**
225.1400	**30.10**	**-9.60**	**20.50**	**30.00**	**-9.50**	**400**	**193**	**Q**	**H**
599.9900	**27.40**	**1.51**	**28.91**	**37.00**	**-8.09**	**100**	**305**	**Q**	**H**
647.9900	**26.10**	**2.46**	**28.56**	**37.00**	**-8.44**	**100**	**168**	**Q**	**H**
672.0100	**26.80**	**2.22**	**29.02**	**37.00**	**-7.98**	**100**	**352**	**Q**	**H**
695.9900	**29.20**	**2.07**	**31.27**	**37.00**	**-5.73**	**100**	**109**	**Q**	**H**

Note: 1. 30MHz to 1000MHz test is Applicable CISPR 22 standard.
2. P= Peak Reading; Q= Quasi-peak Reading.

This document cannot be reproduced except in full, without prior written approval of the Company. 本報告未經本公司書面許可，不可部份複製。

ICES-003 Issue 7-2020

Below 1GHz

Model No.	TCNE1U-21AC-V00H	**Test Mode**	Mode 1
Environmental Conditions	25.2°C, 52% RH	**6dB Bandwidth**	120 kHz
Antenna Pole	Vertical	**Antenna Distance**	10m
Detector Function	Quasi-peak.	**Tested by**	Richard Liang
Standard	ICES-003 CLASS B		

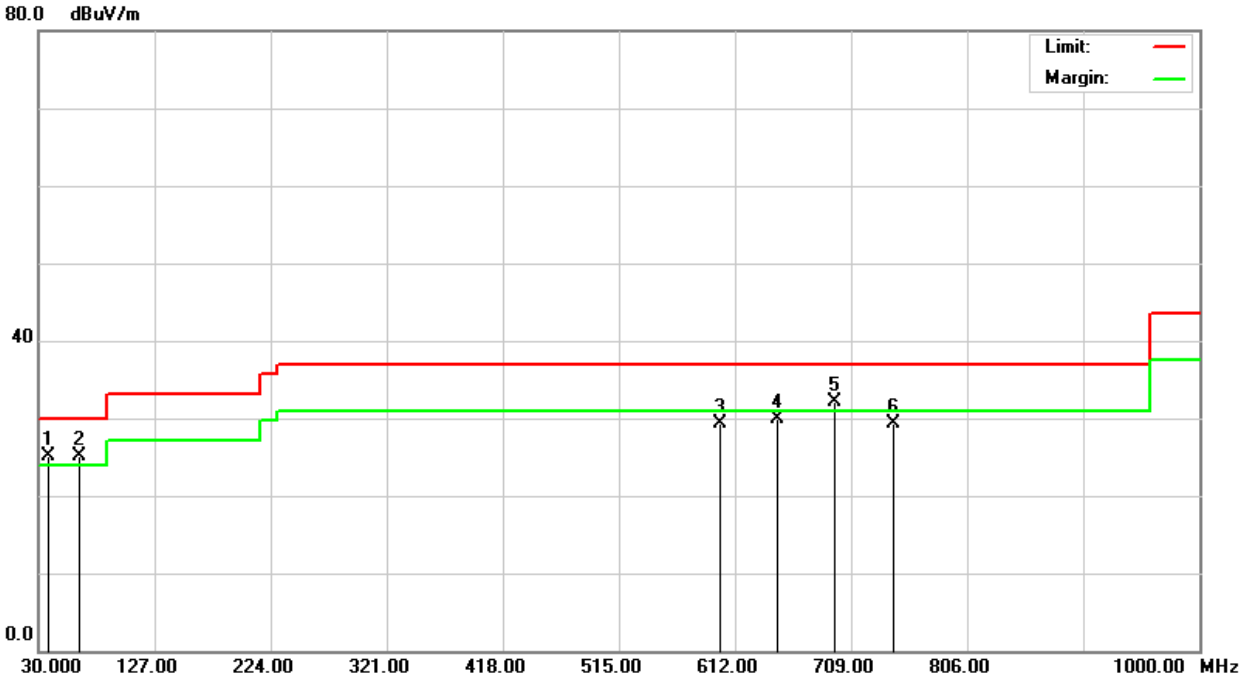

Radiated Emission Readings									
Frequency Range Investigated				**30 MHz to 1000 MHz at 10m**					
Freq. (MHz)	Reading (dBuV)	Factor (dB/m)	Result (dBuV/m)	Limit (dBuV/m)	Margin (dB)	Height (cm)	Degree (°)	Detector (P/Q)	Pol. (H/V)
38.4100	**31.60**	**-6.55**	**25.05**	**30.00**	**-4.95**	**100**	**330**	**Q**	**V**
64.2100	**39.30**	**-14.28**	**25.02**	**30.00**	**-4.98**	**100**	**248**	**Q**	**V**
599.9900	**27.70**	**1.51**	**29.21**	**37.00**	**-7.79**	**400**	**290**	**Q**	**V**
648.0200	**27.40**	**2.46**	**29.86**	**37.00**	**-7.14**	**400**	**76**	**Q**	**V**
696.0100	**30.10**	**2.07**	**32.17**	**37.00**	**-4.83**	**400**	**161**	**Q**	**V**
743.9600	**25.60**	**3.68**	**29.28**	**37.00**	**-7.72**	**400**	**110**	**Q**	**V**

Note: P= Peak Reading; Q= Quasi-peak Reading.

This document cannot be reproduced except in full, without prior written approval of the Company. 本報告未經本公司書面許可，不可部份複製。

Report No.: TMXD2603000796DE **Ref No.:** TMXD2310004093DE

Model No.	TCNE1U-21AC-V00H	**Test Mode**	Mode 1
Environmental Conditions	25.2°C, 52% RH	**6dB Bandwidth**	120 kHz
Antenna Pole	Horizontal	**Antenna Distance**	10m
Detector Function	Quasi-peak.	**Tested by**	Richard Liang
Standard	ICES-003 CLASS B		

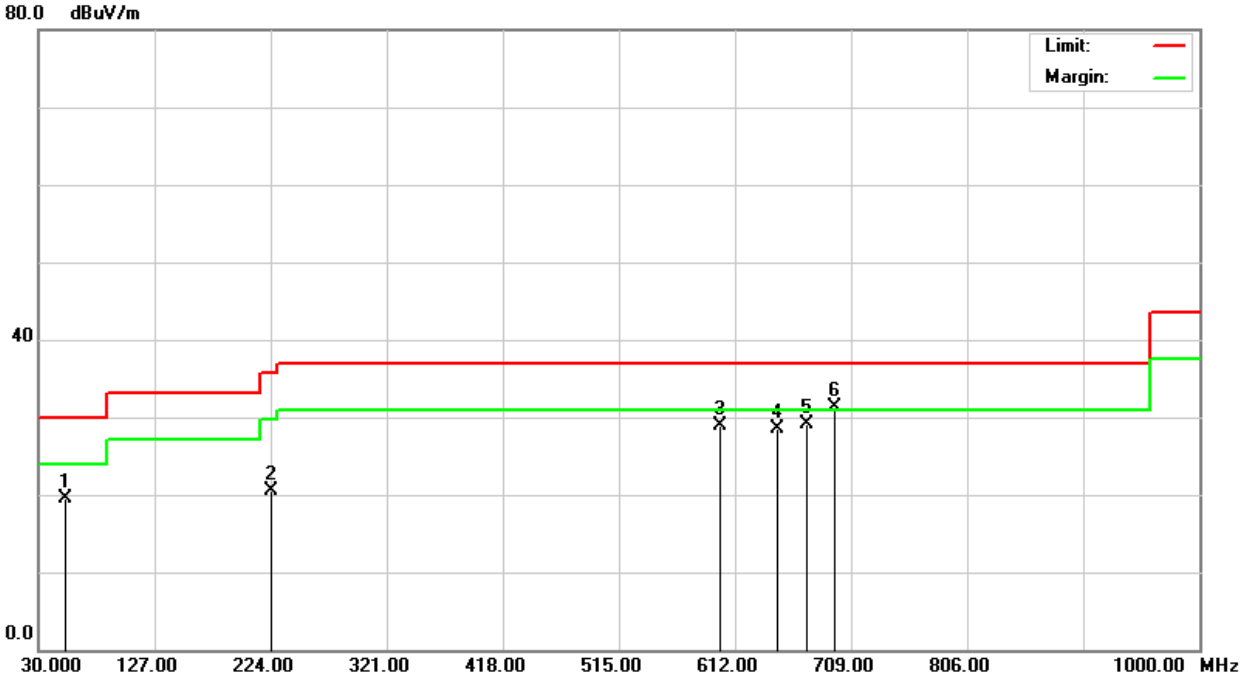

Radiated Emission Readings									
Frequency Range Investigated				**30 MHz to 1000 MHz at 10m**					
Freq. (MHz)	Reading (dBuV)	Factor (dB/m)	Result (dBuV/m)	Limit (dBuV/m)	Margin (dB)	Height (cm)	Degree (°)	Detector (P/Q)	Pol. (H/V)
52.2400	**32.50**	**-13.07**	**19.43**	**30.00**	**-10.57**	**400**	**158**	**Q**	**H**
225.1400	**30.10**	**-9.60**	**20.50**	**35.60**	**-15.10**	**400**	**48**	**Q**	**H**
599.9900	**27.40**	**1.51**	**28.91**	**37.00**	**-8.09**	**100**	**331**	**Q**	**H**
647.9900	**26.10**	**2.46**	**28.56**	**37.00**	**-8.44**	**100**	**29**	**Q**	**H**
672.0100	**26.80**	**2.22**	**29.02**	**37.00**	**-7.98**	**100**	**75**	**Q**	**H**
695.9900	**29.20**	**2.07**	**31.27**	**37.00**	**-5.73**	**100**	**139**	**Q**	**H**

Note: P= Peak Reading; Q= Quasi-peak Reading.

This document cannot be reproduced except in full, without prior written approval of the Company. 本報告未經本公司書面許可，不可部份複製。

Above 1GHz

Model No.	TCNE1U-21AC-V00H	**Test Mode**	Mode 1
Environmental Conditions	25.3 °C, 52% RH	**6dB Bandwidth**	1 MHz
Antenna Pole	Vertical / Horizontal	**Antenna Distance**	3m
Highest frequency generated or used	2000MHz	**Upper frequency**	10000MHz
Detector Function	Peak and average.	**Tested by**	Richard Liang
Standard	FCC CLASS B / ICES-003 CLASS B		

Radiated Emission Readings							
Frequency Range Investigated				**Above 1GHz at 3m**			
Freq. (MHz)	Reading (dBuV)	Factor (dB/m)	Result (dBuV/m)	Limit (dBuV/m)	Margin (dB)	Detector (P/A)	Pol. (H/V)
1527.000	**58.24**	**-8.86**	**49.38**	**74.00**	**-24.62**	**P**	**V**
5403.000	**53.01**	**-1.11**	**51.90**	**74.00**	**-22.10**	**P**	**V**
5981.000	**49.03**	**-0.14**	**48.89**	**74.00**	**-25.11**	**P**	**V**
9857.000	**47.58**	**1.72**	**49.30**	**74.00**	**-24.70**	**P**	**V**
12866.000	**46.38**	**5.15**	**51.53**	**74.00**	**-22.47**	**P**	**V**
16844.000	**46.25**	**8.07**	**54.32**	**74.00**	**-19.68**	**P**	**V**

Radiated Emission Readings							
Frequency Range Investigated				**Above 1GHz at 3m**			
Freq. (MHz)	Reading (dBuV)	Factor (dB/m)	Result (dBuV/m)	Limit (dBuV/m)	Margin (dB)	Detector (P/A)	Pol. (H/V)
1476.000	**56.03**	**-8.80**	**47.23**	**74.00**	**-26.77**	**P**	**H**
2207.000	**52.74**	**-5.06**	**47.68**	**74.00**	**-26.32**	**P**	**H**
5403.000	**48.28**	**-1.11**	**47.17**	**74.00**	**-26.83**	**P**	**H**
10180.000	**47.13**	**2.46**	**49.59**	**74.00**	**-24.41**	**P**	**H**
12849.000	**46.58**	**5.16**	**51.74**	**74.00**	**-22.26**	**P**	**H**
16861.000	**45.19**	**8.06**	**53.25**	**74.00**	**-20.75**	**P**	**H**

Note: 1. P= Peak Reading; A= Average Reading.

This document cannot be reproduced except in full, without prior written approval of the Company. 本報告未經本公司書面許可，不可部份複製。

8 PHOTOGRAPHS OF THE TEST CONFIGURATION

CONDUCTED EMISSION TEST

This document cannot be reproduced except in full, without prior written approval of the Company. 本報告未經本公司書面許可，不可部份複製。

RADIATED EMISSION TEST (Below 1GHz)

This document cannot be reproduced except in full, without prior written approval of the Company. 本報告未經本公司書面許可，不可部份複製。

RADIATED EMISSION TEST (Above 1GHz)

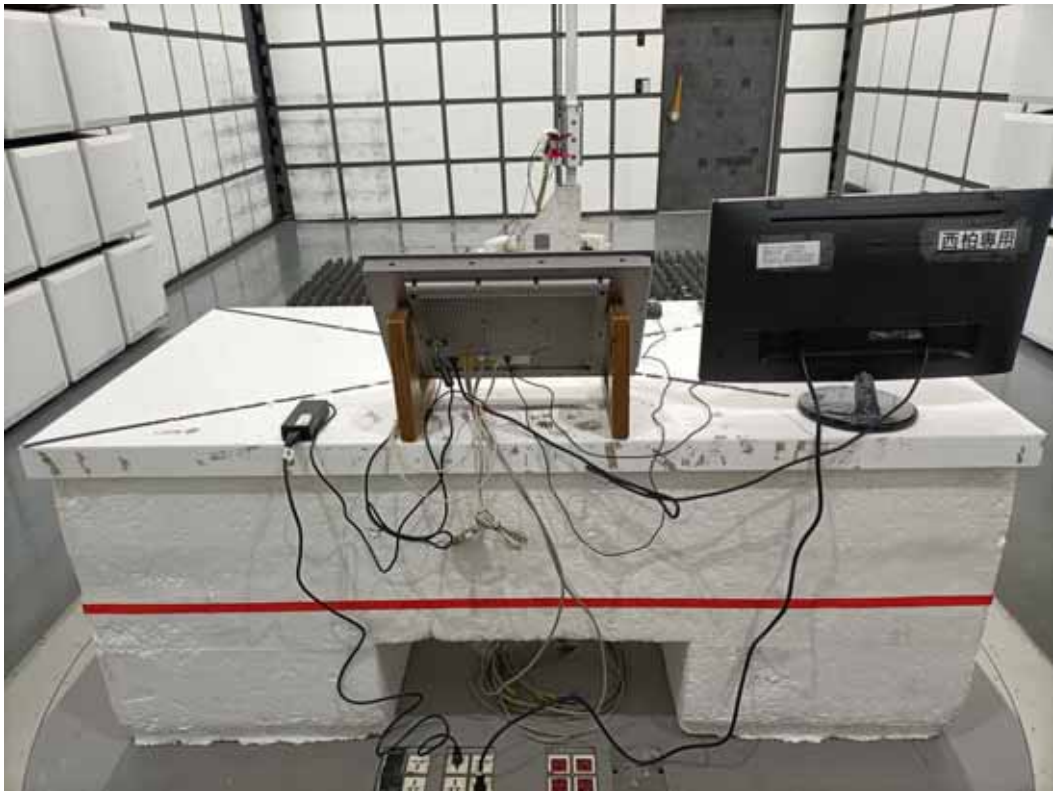

This document cannot be reproduced except in full, without prior written approval of the Company. 本報告未經本公司書面許可，不可部份複製。

APPENDIX 1 - PHOTOGRAPHS OF EUT

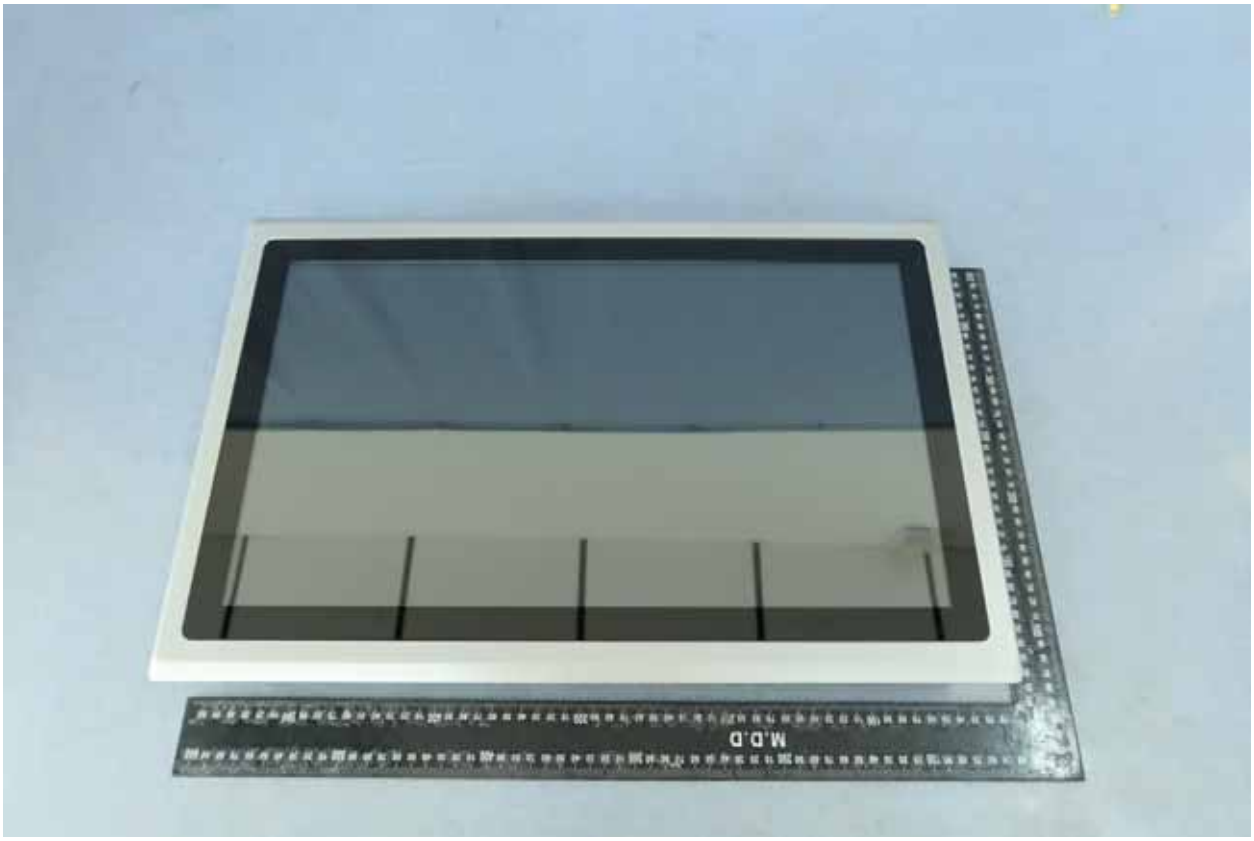

This document cannot be reproduced except in full, without prior written approval of the Company. 本報告未經本公司書面許可，不可部份複製。

This document cannot be reproduced except in full, without prior written approval of the Company. 本報告未經本公司書面許可，不可部份複製。

This document cannot be reproduced except in full, without prior written approval of the Company. 本報告未經本公司書面許可，不可部份複製。

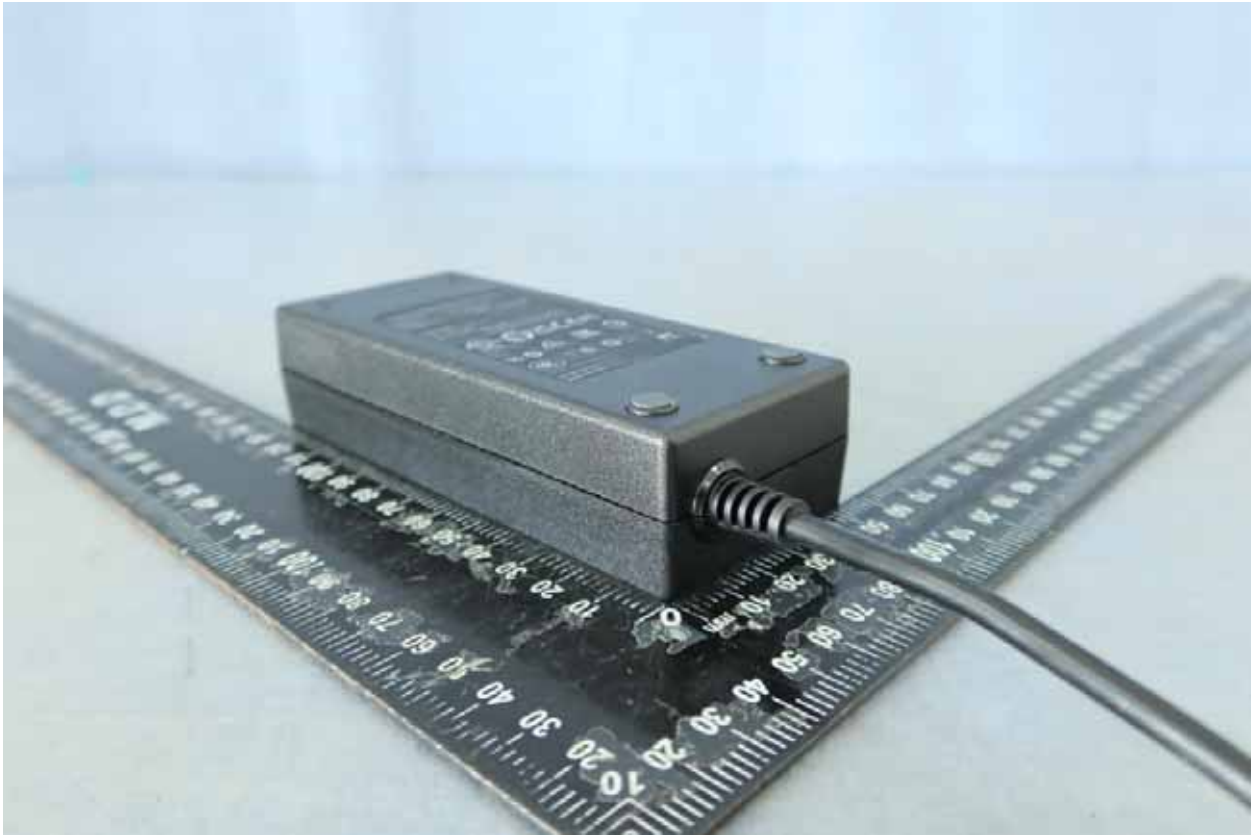

This document cannot be reproduced except in full, without prior written approval of the Company. 本報告未經本公司書面許可，不可部份複製。

Report No.: TMXD2603000796DE **Ref No.:** TMXD2310004093DE

This document cannot be reproduced except in full, without prior written approval of the Company. 本報告未經本公司書面許可，不可部份複製。