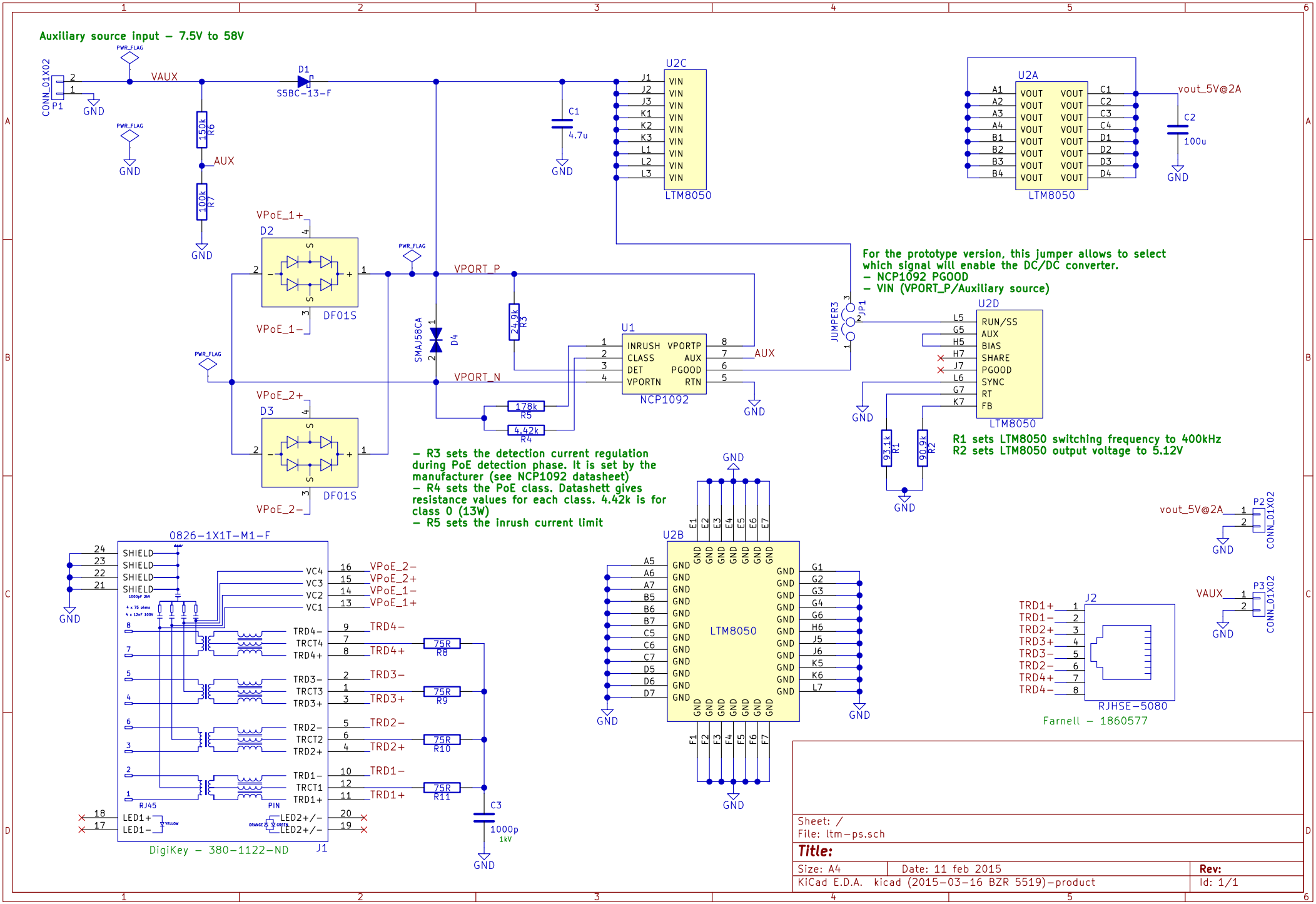
Auxiliary source input – 7.5V to 58V
CONN_01X02
P1
VAUX
D1
S5BC-13-F
150k R6
AUX
100k R7
C1
4.7u
U2C
LTM8050
U2A
vout_5V@2A
C2
100u
VPoE_1+
D2
DF01S
VPoE_1–
VPORT_P
VPORT_N
SMAJ58CA
D4
24.9k R3
U1
NCP1092
INRUSH
CLASS
DET
VPORTN
VPORTP
AUX
PGOOD
RTN
178k R5
4.42k R4
VPoE_2+
D3
DF01S
VPoE_2–
– R3 sets the detection current regulation during PoE detection phase. It is set by the manufacturer (see NCP1092 datasheet)
– R4 sets the PoE class. Datashett gives resistance values for each class. 4.42k is for class 0 (13W)
– R5 sets the inrush current limit
For the prototype version, this jumper allows to select which signal will enable the DC/DC converter.
– NCP1092 PGOOD
– VIN (VPORT_P/Auxiliary source)
JUMPER3
JP1
U2D
LTM8050
RUN/SS
AUX
BIAS
SHARE
PGOOD
SYNC
RT
FB
93.1k R1
90.9k R2
R1 sets LTM8050 switching frequency to 400kHz
R2 sets LTM8050 output voltage to 5.12V
0826-1X1T-M1-F
SHIELD
VC4
VC3
VC2
VC1
TRD4–
TRCT4
TRD4+
TRD3–
TRCT3
TRD3+
TRD2–
TRCT2
TRD2+
TRD1–
TRCT1
TRD1+
75R R8
75R R9
75R R10
75R R11
C3
1000p
1kV
LED1+
LED1–
LED2+/–
RJ45
PIN
DigiKey – 380-1122-ND
J1
U2B
LTM8050
vout_5V@2A
P2
CONN_01X02
VAUX
P3
J2
TRD1+
TRD1–
TRD2+
TRD3+
TRD3–
TRD2–
TRD4+
TRD4–
RJHSE-5080
Farnell – 1860577
Sheet: /
File: ltm-ps.sch
Title:
Size: A4
Date: 11 feb 2015
Rev:
KiCad E.D.A. kicad (2015-03-16 BZR 5519)-product
Id: 1/1