POWER

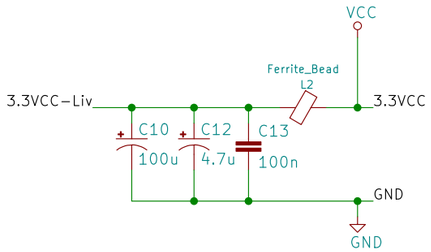

ATMEGA

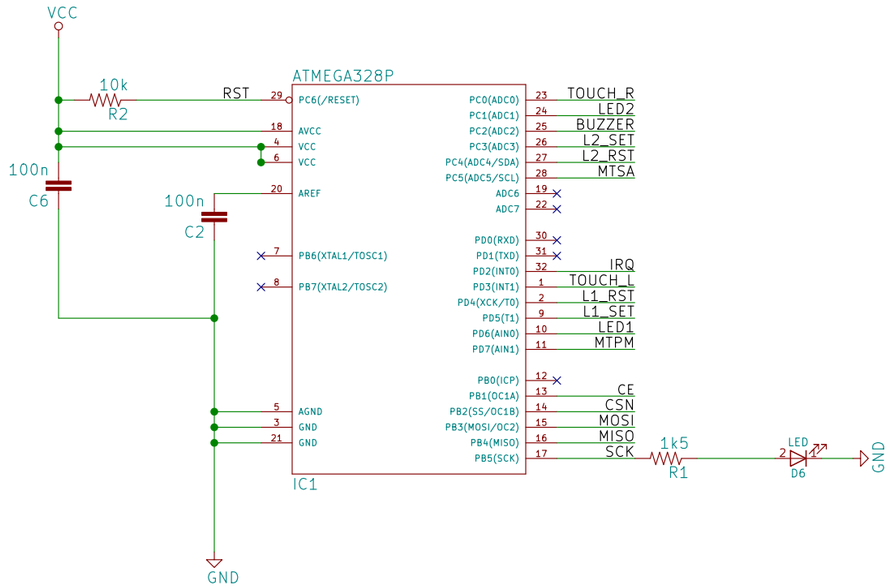

Touch Sensors

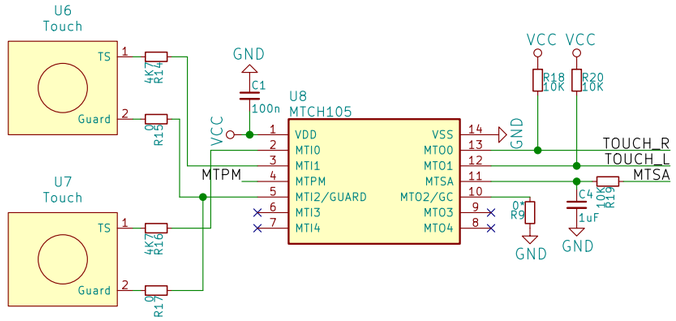

Signing

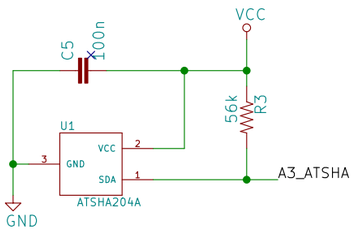

Radio

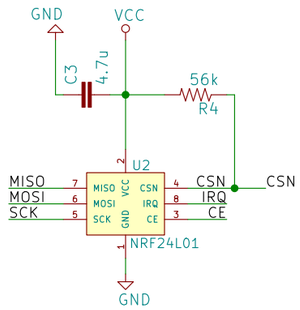

LED indicators

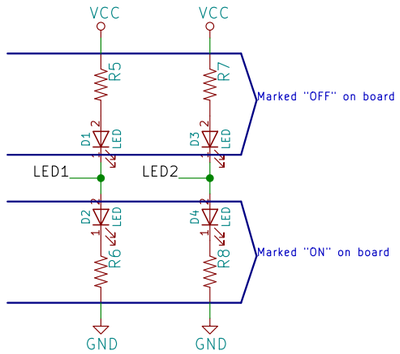

Connector

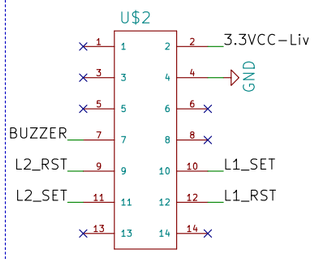

Programming

AVRISP

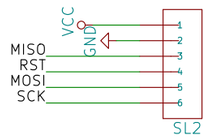

LIVOLO EU 2 GANG 1 WAY
VL-C702X-2 VER C1

Sheet: /
File: Livolo_EU_2Gang_1way.sch

Title: Linovo_EU_2Gang_1way.sch

Size: A3	Date: 2017-07-29	Rev: v1.2
KiCad E.D.A. eeschema 4.0.6		Id: 1/1