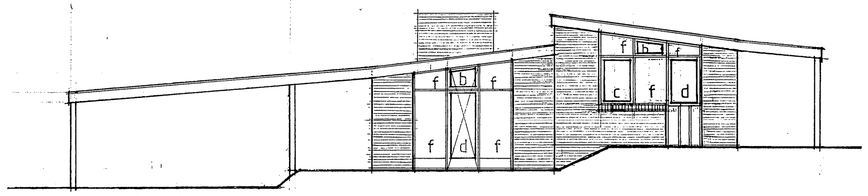

west elevation

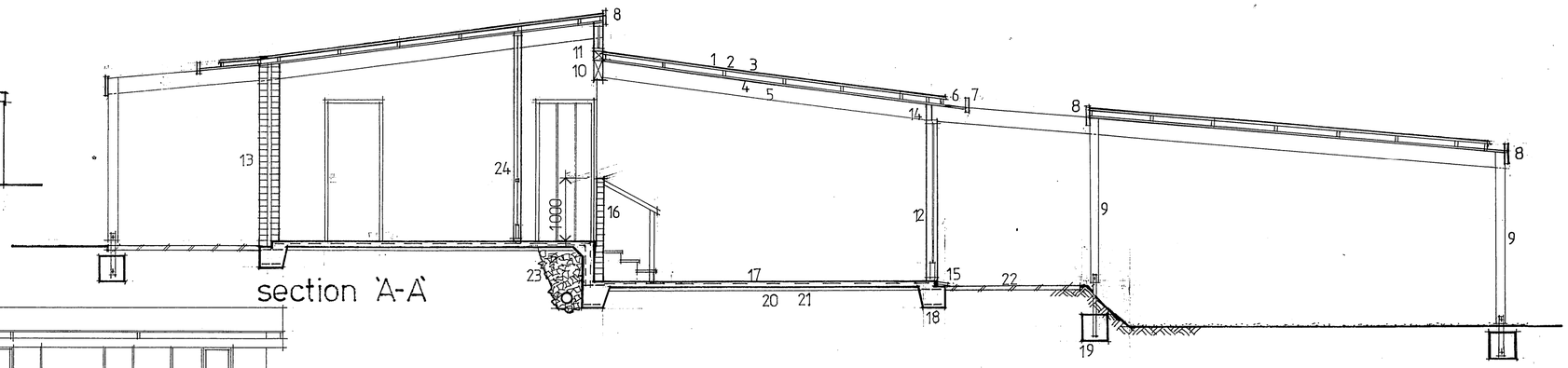

section 'A-A'

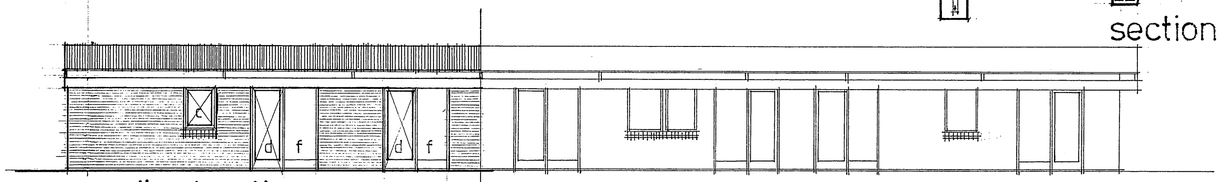

south elevation

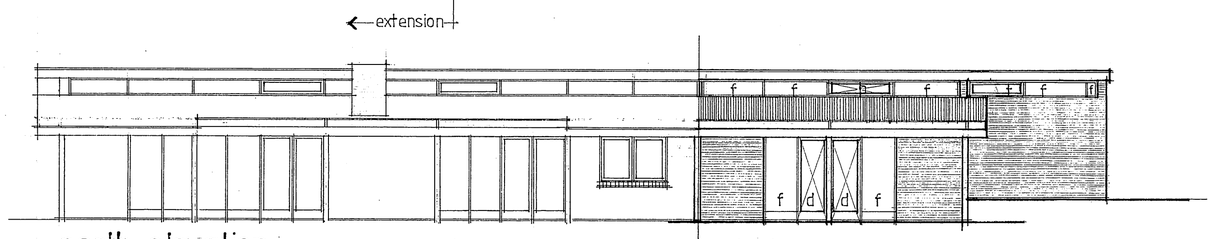

north elevation

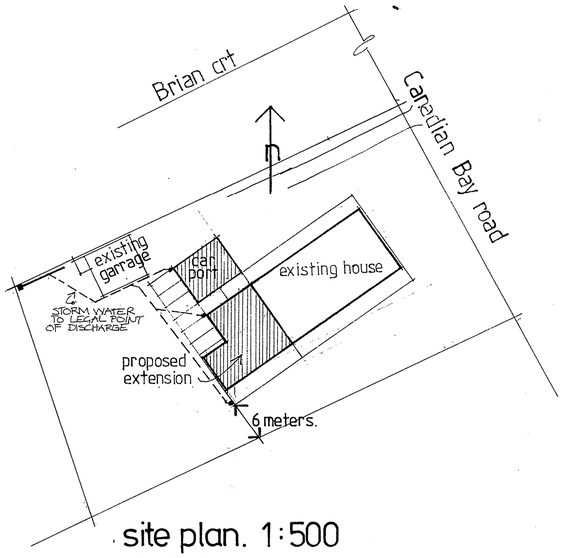

site plan. 1:500

lot № 3
subdivision № 99330
vol. № 8656 fol № 709

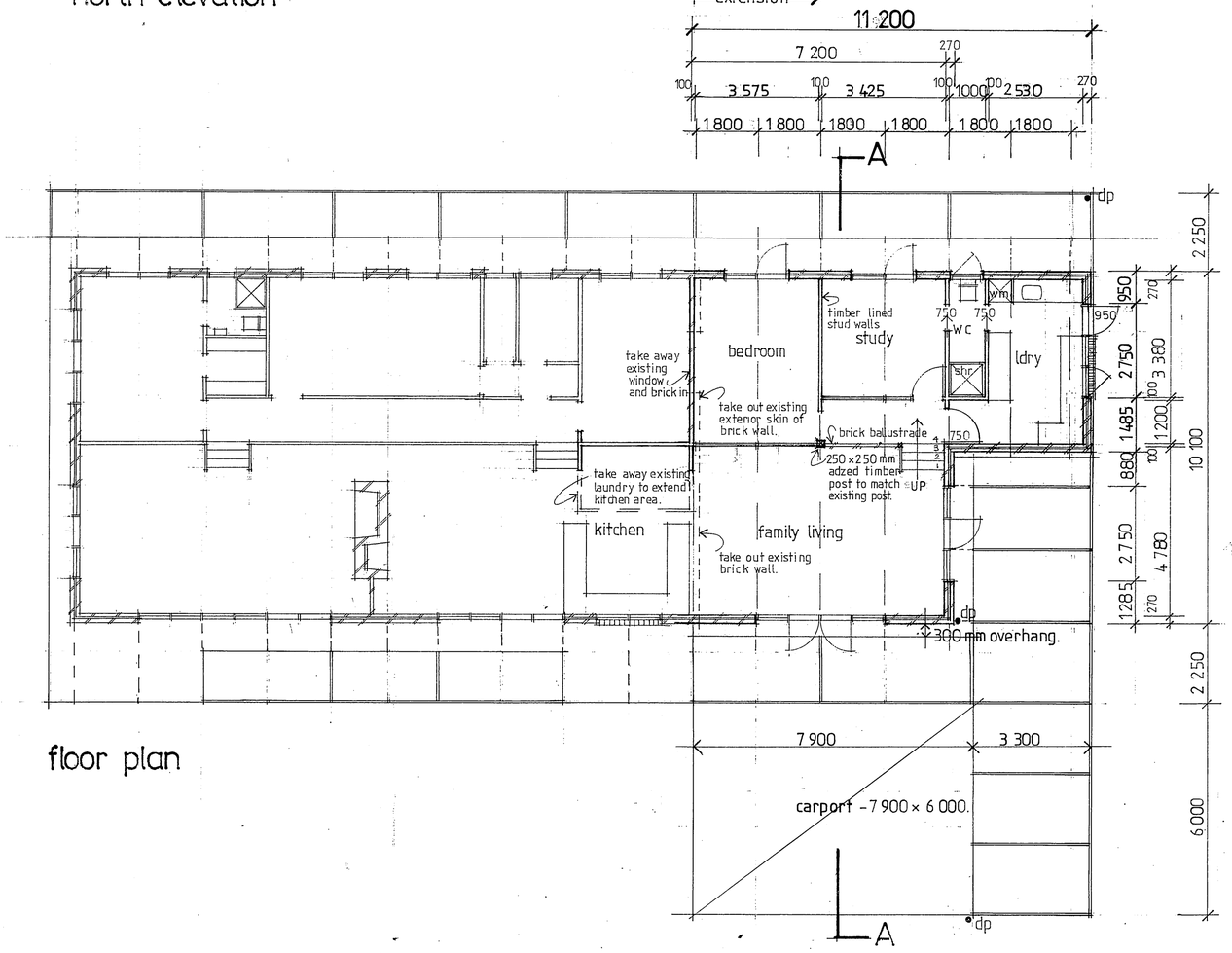

floor plan

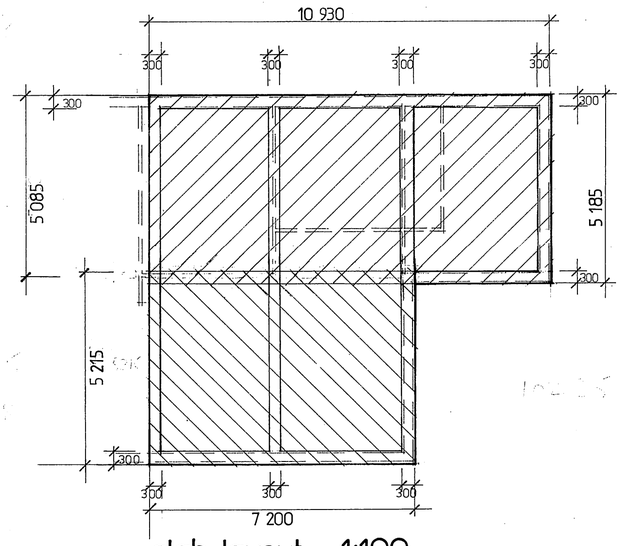

slab layout. 1:100

NOTE - ground under slab to be sprayed for treatment of termites as per council requirements to Australian standards.

legend:

1 metal deck to suit existing roof.
2 75 × 50 mm hwd battens at 900 crs.
3 50 mm insulation with layer of reflective foil.
4 19 mm timber ceiling to match existing ceiling.
5 225 × 75 mm oregon rafters at 1800 mm crs.
6 300 × 75 mm deep guttering.
7 200 × 50 mm oregon fascia
8 250 × 38 mm oregon fascia.
9 125 × 125 mm timber post on verandah.
250 × 250 mm timber post in house.
10 300 × 100 mm oregon beam
11 oregon packing above beam.
12 150 mm window wall.
13 secondhand "hawthorn" brick cavity wall.
14 225 × 75 mm oregon packing above windows.
15 threshold to match existing.
16 1000 mm high brick ballustrade.
17 100 mm concrete slab reinforced with F72 mesh.
18 300 × 400 mm deep edgebeams reinforced with 2 layers of F 11 top & bottom.
19 400 × 400 × 400 mm deep concrete pads under verandah posts. (posts secured to concrete by metal strip bolted to side of post & bent in concrete.)
20 0·2 mm plastic waterproof membrane.
21 50 mm packing sand
22 brick paving.
23 bluestone screenings & ag. pipe.
24 window wall between bedroom & family room and study & familyroom

c sidehung casement
t top hung casement
b bottom hung casement
d door
f fixed glass
dp downpipe

COOMBS extension MT. ELIZA

design Alistair Knox & Associates
Mt Pleasant road, Eltham 439 7404
Bohdan Kuzyk.

date oct. 1986
scale 1:100, 1:50, 1:500.

drawing № 1261

[extension to originally "SAUNDERS HOUSE - drw. № 604" dec. 1970.]