Machine Learning Department
School of Computer Science
Carnegie Mellon University

Backpropagation II

Pat Virtue & Matt Gormley
Lecture 13
Feb. 23, 2026

Poll 1

$\hat{y} = \text{sofmax}(\vec{z})$

Logistic regression for 28x28=784 pixel hand-written digit images into 10 classes:

$\vec{z} = \qquad \vec{x}$

How many parameters (including bias terms)?

A. 10 Toxic

B. 10+784

C. 10*784

D. 10*784 + 10

E. 10*784 + 784

F. I have no idea

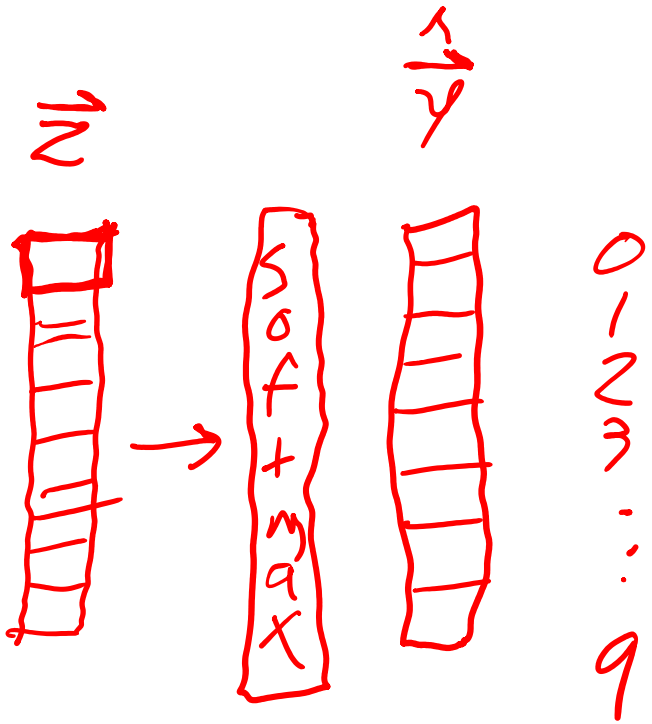

Outline

Last week:

- Neural Networks
- Backpropagation
- Multivariate chain rule

Today:

- Neural network optimization ← three-neuron network
- Backpropagation (scalar version) ← deeeeeppper
- A bit more matrix calculus
- Backpropagation (vector version) ← WIDER

Three-neuron Network

Network diagram

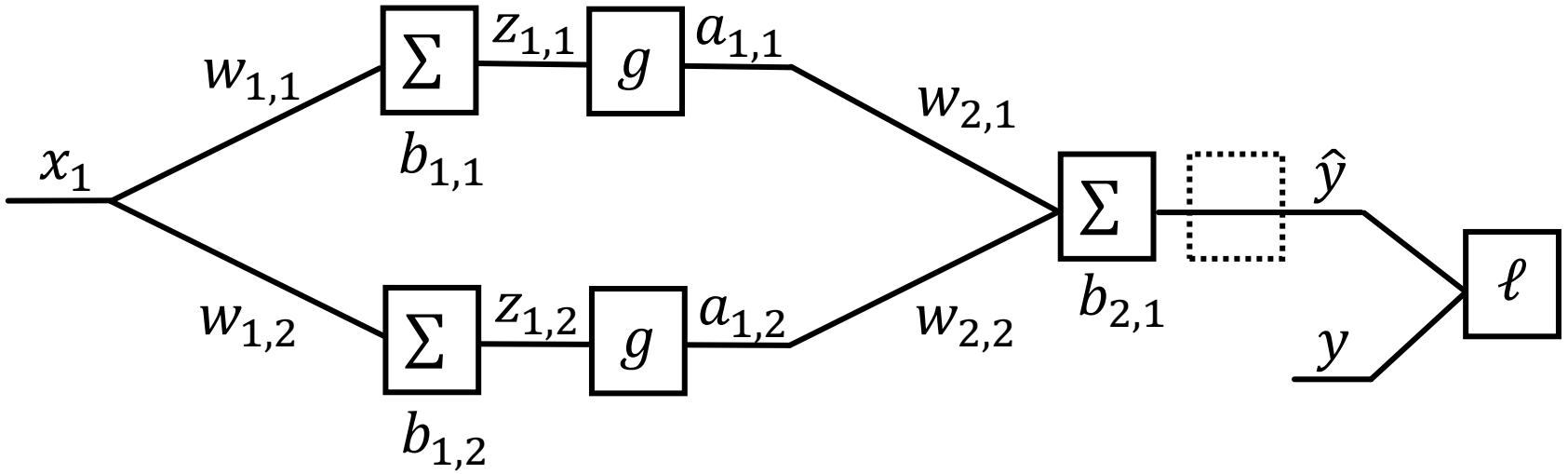

$$\hat{y} = h_{\boldsymbol{\theta}}\,(\mathbf{x}) = b_2 + \sum_j w_{2,j}\, a_{1,j}$$

$$a_{1,j} = g_{ReLU}\left(b_{1,j} + w_{1,j}\, x_1\right)$$

Poll 2

How many total parameters?

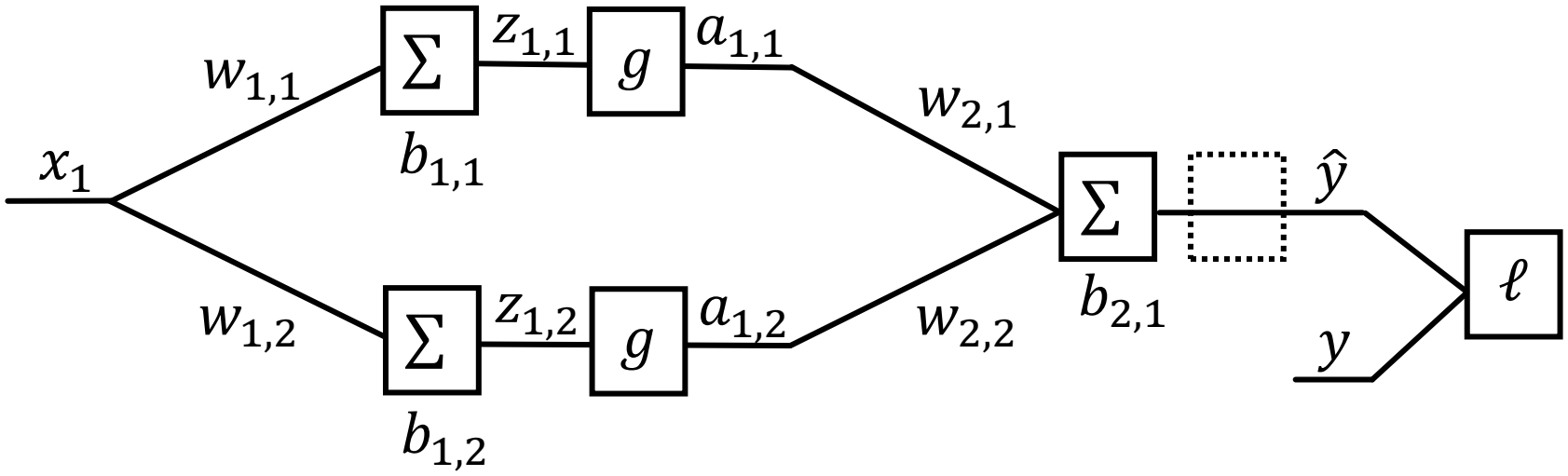

Objective, Loss Functions, Gradient Descent

Objective

$$J(\theta) = \frac{1}{N}\sum_{i=1}^{N} J^{(i)}(\theta) \qquad J^{(i)}(\theta) = \ell\left(y^{(i)}, \hat{y}^{(i)}\right) \qquad \hat{y} = h(x;\theta)$$

Loss functions

- Regression → Squared error: $\ell(y, \hat{y}) = (y - \hat{y})^2$
- Classfication → Cross entropy: $\ell(\boldsymbol{y}, \hat{\boldsymbol{y}}) = -\sum_k y_k \log \hat{y}_k$

Gradient descent

while not converged

$$\theta \leftarrow \theta - \alpha\, \partial J / \partial \theta$$

Poll 3

Which of the following updates will we execute during gradient descent?

Select all that apply

A. $x \leftarrow x - \alpha \frac{\partial J}{\partial x}$

B. $w_{1,1} \leftarrow w_{1,1} - \alpha \frac{\partial J}{\partial w_{1,1}}$

C. $b_{1,1} \leftarrow b_{1,1} - \alpha \frac{\partial J}{\partial b_{1,1}}$

D. $a_{1,1} \leftarrow a_{1,1} - \alpha \frac{\partial J}{\partial a_{1,1}}$

E. $\hat{y} \leftarrow \hat{y} - \alpha \frac{\partial J}{\partial \hat{y}}$

F. $y \leftarrow y - \alpha \frac{\partial J}{\partial y}$

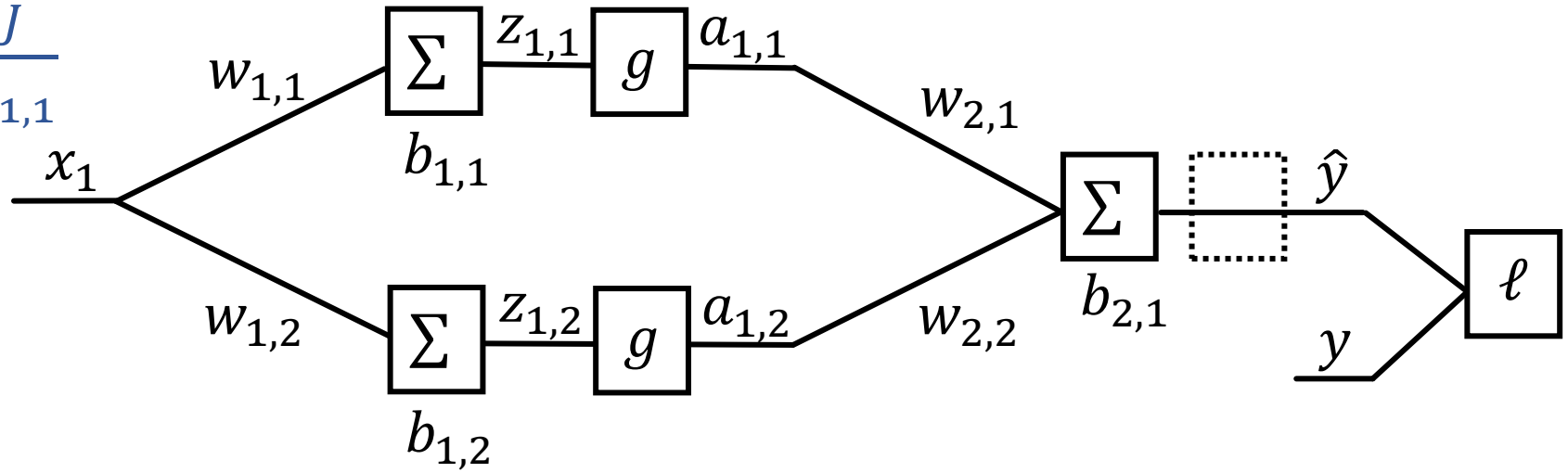

Optimization

$$\hat{y} = h_{\boldsymbol{\theta}}(\mathbf{x}) = b_2 + \sum_j w_{2,j}\, a_{1,j}$$

$$a_{1,j} = g\left(b_{1,j} + w_{1,j}\, x_1\right)$$

Three-neuron network

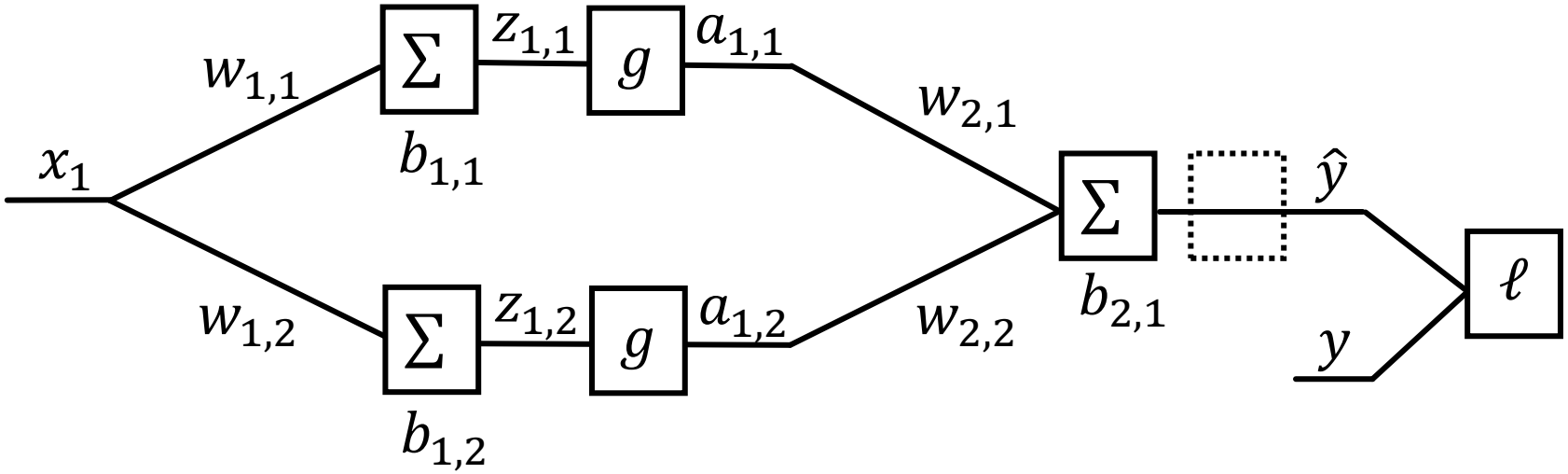

$$\frac{\partial J}{\partial w_{2,1}} =$$

$$\frac{\partial J}{\partial b_{2,1}} =$$

Optimization

$$\hat{y} = h_{\boldsymbol{\theta}}(\mathbf{x}) = b_2 + \sum_j w_{2,j}\, a_{1,j}$$

$$a_{1,j} = g\left(b_{1,j} + w_{1,j}\, x_1\right)$$

Three-neuron network

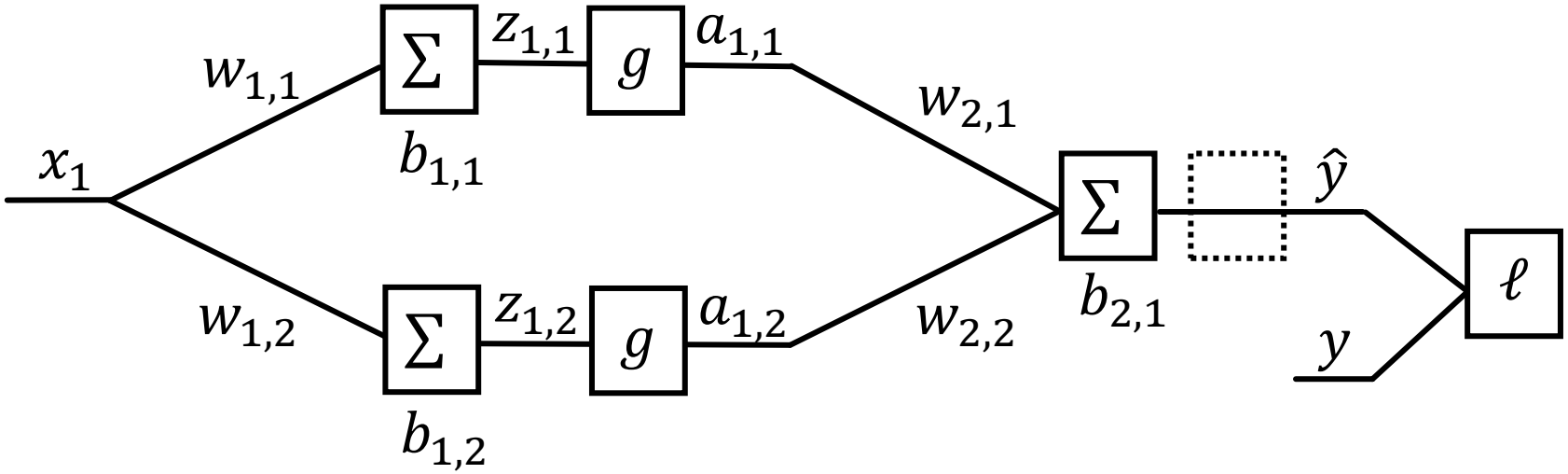

$$\frac{\partial J}{\partial w_{1,1}} =$$

$$\frac{\partial J}{\partial b_{1,1}} =$$

$$\frac{\partial J}{\partial w_{2,1}} = \frac{\partial \ell}{\partial \hat{y}} \frac{\partial \hat{y}}{\partial w_{2,1}}$$

$$\frac{\partial J}{\partial b_{2,1}} = \frac{\partial \ell}{\partial \hat{y}} \frac{\partial \hat{y}}{\partial b_{2,1}}$$

Optimization

$$\hat{y} = h_{\boldsymbol{\theta}}(\mathbf{x}) = b_2 + \sum_j w_{2,j}\, a_{1,j}$$

$$a_{1,j} = g\left(b_{1,j} + w_{1,j}\, x_1\right)$$

Three-neuron network

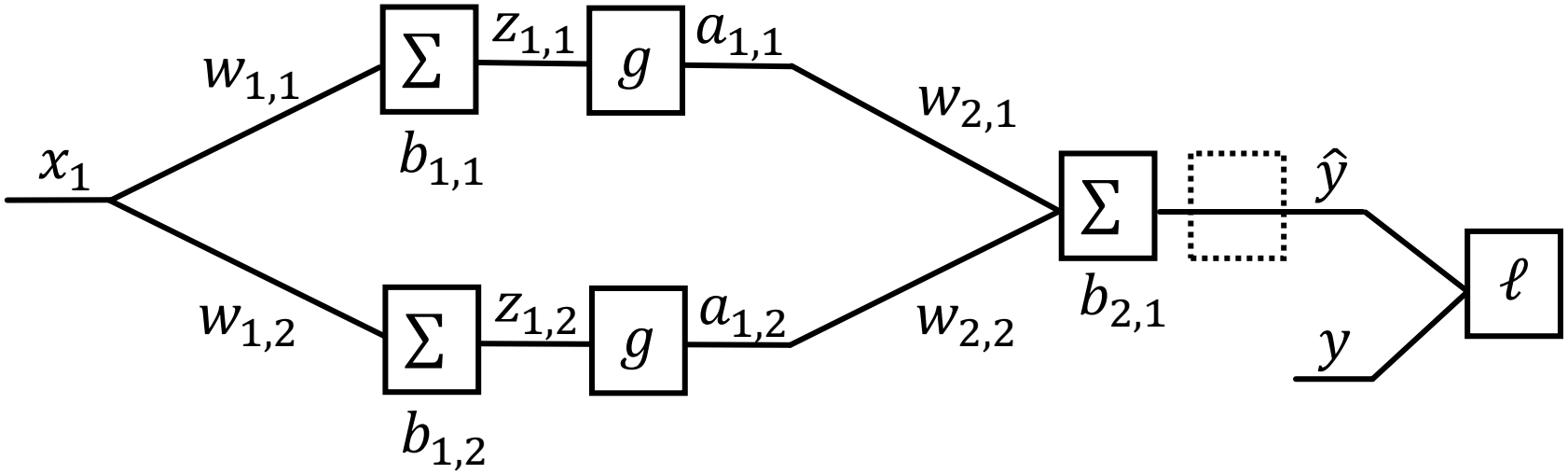

$$\frac{\partial J}{\partial w_{1,j}} = \frac{\partial \ell}{\partial \hat{y}} \frac{\partial \hat{y}}{\partial a_{1,j}} \frac{\partial a_{1,j}}{\partial z_{1,j}} \frac{\partial z_{1,j}}{\partial w_{1,j}}$$

$$\frac{\partial J}{\partial w_{2,j}} = \frac{\partial \ell}{\partial \hat{y}} \frac{\partial \hat{y}}{\partial w_{2,j}}$$

$$\frac{\partial J}{\partial b_{1,j}} = \frac{\partial \ell}{\partial \hat{y}} \frac{\partial \hat{y}}{\partial a_{1,j}} \frac{\partial a_{1,j}}{\partial z_{1,j}} \frac{\partial z_{1,j}}{\partial b_{1,j}}$$

$$\frac{\partial J}{\partial b_{2,1}} = \frac{\partial \ell}{\partial \hat{y}} \frac{\partial \hat{y}}{\partial b_{2,1}}$$

Network Backpropagation

Scalar's version ← deeeeeppper

Forward Pass

Width 1 deep network (no bias) (dumb but will help with calculus)

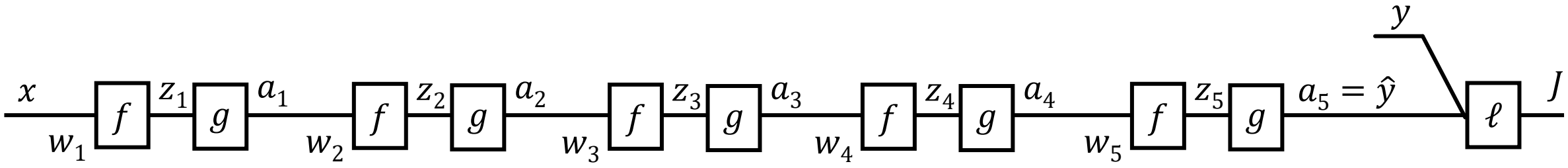

$$z_\ell = f(w_\ell, a_{\ell-1}) = w_\ell \cdot a_{\ell-1}$$

$$a_\ell = g(z_\ell)$$

$$\hat{y} = h_{\boldsymbol{\theta}}(\mathbf{x}) = g\left(w_5 \cdot g\left(w_4 \cdot g\left(w_3 \cdot g\left(w_2 \cdot g(w_1 \cdot x)\right)\right)\right)\right)$$

$$= g\left(f\left(g\left(f\left(g\left(f\left(g\left(f\left(g(f(x))\right)\right)\right)\right)\right)\right)\right)\right)$$

Backpropagation

$$\hat{y} = h_{\boldsymbol{\theta}}(\mathbf{x}) = g\left(w_5 \cdot g\left(w_4 \cdot g\left(w_3 \cdot g\left(w_2 \cdot g(w_1 \cdot x)\right)\right)\right)\right)$$

Width 1 deep network (no bias) (dumb but will help with calculus)

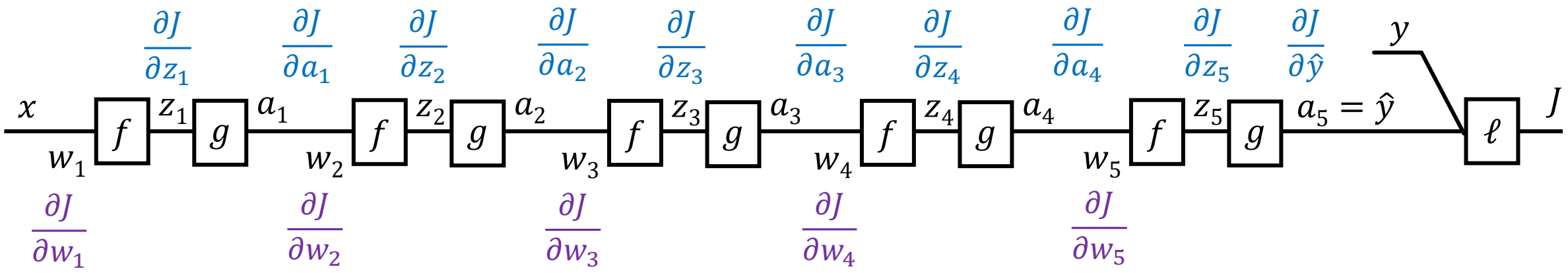

Questions:

- Why do we need to compute all of the $\partial J / \partial z_\ell$ and $\partial J / \partial a_\ell$?
- Why "backwards"?
- How do we actually compute these?
- (What else do we need to learn to go beyond this useless network?)

Reminder: Calculus Chain Rule (scalar version)

Composite functions → chain rule

$$J = \ell\left(g\left(f(x)\right)\right)$$

$$J = \ell(\hat{y})$$
$$\hat{y} = g(z)$$
$$z = f(x, w)$$

$$\frac{dJ}{dw} = \frac{d\ell}{d\hat{y}}\frac{dg}{dz}\frac{df}{dw}$$

Why backwards?

$$\hat{y} = h_{\boldsymbol{\theta}}(\mathbf{x}) = g\left(w_5 \cdot g\left(w_4 \cdot g\left(w_3 \cdot g\left(w_2 \cdot g(w_1 \cdot x)\right)\right)\right)\right)$$

Width 1 deep network (no bias) (dumb but will help with calculus)

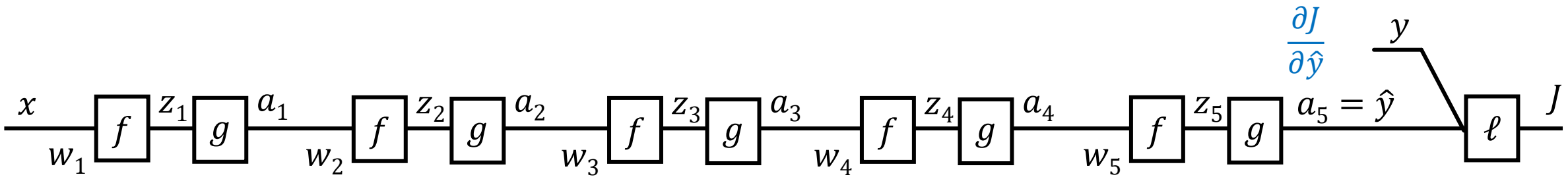

$$\frac{\partial J}{\partial w_1} =$$

Why backwards?

$$\hat{y} = h_{\boldsymbol{\theta}}(\mathbf{x}) = g\left(w_5 \cdot g\left(w_4 \cdot g\left(w_3 \cdot g\left(w_2 \cdot g(w_1 \cdot x)\right)\right)\right)\right)$$

Width 1 deep network (no bias) (dumb but will help with calculus)

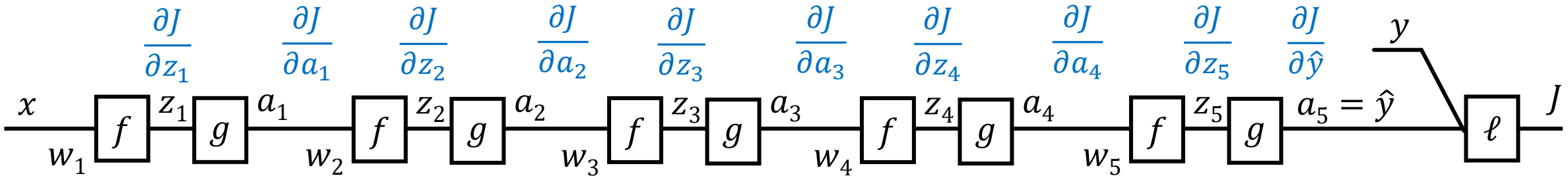

$$\frac{\partial J}{\partial w_1} = \frac{\partial J}{\partial \hat{y}} \frac{\partial g}{\partial z_5} \frac{\partial f}{\partial a_4} \frac{\partial g}{\partial z_4} \frac{\partial f}{\partial a_3} \frac{\partial g}{\partial z_3} \frac{\partial f}{\partial a_2} \frac{\partial g}{\partial z_2} \frac{\partial f}{\partial a_1} \frac{\partial g}{\partial z_1} \frac{\partial f}{\partial w_1}$$

$$\frac{\partial J}{\partial w_2} =$$

Why backwards?

$$\hat{y} = h_{\boldsymbol{\theta}}(\mathbf{x}) = g\left(w_5 \cdot g\left(w_4 \cdot g\left(w_3 \cdot g\left(w_2 \cdot g(w_1 \cdot x)\right)\right)\right)\right)$$

Width 1 deep network (no bias) (dumb but will help with calculus)

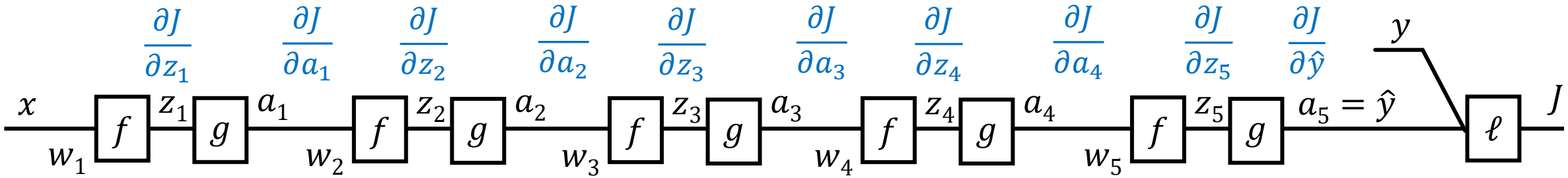

$$\frac{\partial J}{\partial w_1} = \frac{\partial J}{\partial \hat{y}}\frac{\partial g}{\partial z_5}\frac{\partial f}{\partial a_4}\frac{\partial g}{\partial z_4}\frac{\partial f}{\partial a_3}\frac{\partial g}{\partial z_3}\frac{\partial f}{\partial a_2}\frac{\partial g}{\partial z_2}\frac{\partial f}{\partial a_1}\frac{\partial g}{\partial z_1}\frac{\partial f}{\partial w_1}$$

$$\frac{\partial J}{\partial w_2} = \frac{\partial J}{\partial \hat{y}}\frac{\partial g}{\partial z_5}\frac{\partial f}{\partial a_4}\frac{\partial g}{\partial z_4}\frac{\partial f}{\partial a_3}\frac{\partial g}{\partial z_3}\frac{\partial f}{\partial a_2}\frac{\partial g}{\partial z_2}\frac{\partial f}{\partial w_2}$$

$$\frac{\partial J}{\partial w_3} = \frac{\partial J}{\partial \hat{y}}\frac{\partial g}{\partial z_5}\frac{\partial f}{\partial a_4}\frac{\partial g}{\partial z_4}\frac{\partial f}{\partial a_3}\frac{\partial g}{\partial z_3}\frac{\partial f}{\partial w_3}$$

$$\frac{\partial J}{\partial w_4} = \frac{\partial J}{\partial \hat{y}}\frac{\partial g}{\partial z_5}\frac{\partial f}{\partial a_4}\frac{\partial g}{\partial z_4}\frac{\partial f}{\partial w_4}$$

$$\frac{\partial J}{\partial w_5} = \frac{\partial J}{\partial \hat{y}}\frac{\partial g}{\partial z_5}\frac{\partial f}{\partial w_5}$$

Why backwards?

$$\hat{y} = h_{\boldsymbol{\theta}}(\mathbf{x}) = g\left(w_5 \cdot g\left(w_4 \cdot g\left(w_3 \cdot g\left(w_2 \cdot g(w_1 \cdot x)\right)\right)\right)\right)$$

Width 1 deep network (no bias) (dumb but will help with calculus)

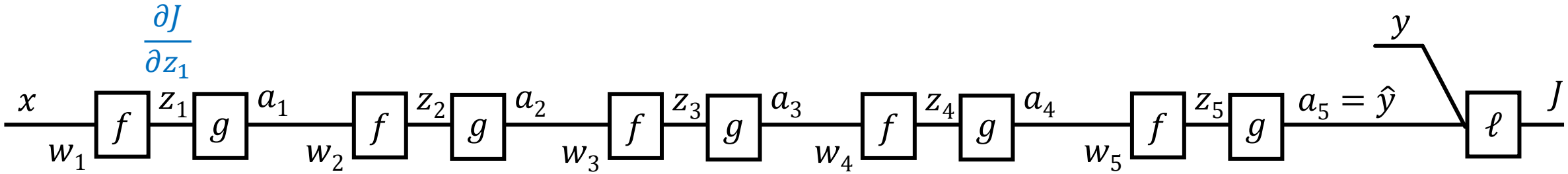

$$\frac{\partial J}{\partial w_1} = \frac{\partial J}{\partial \hat{y}} \frac{\partial g}{\partial z_5} \frac{\partial f}{\partial a_4} \frac{\partial g}{\partial z_4} \frac{\partial f}{\partial a_3} \frac{\partial g}{\partial z_3} \frac{\partial f}{\partial a_2} \frac{\partial g}{\partial z_2} \frac{\partial f}{\partial a_1} \frac{\partial g}{\partial z_1} \frac{\partial f}{\partial w_1}$$

$$= \frac{\partial J}{\partial z_1} \frac{\partial f}{\partial w_1}$$

What if someone had already done all of the work to compute $\frac{\partial J}{\partial z_1}$?

Then we just need to do the local partial derivative for f with respect to the parameter w and then use that to compute the partial derivative for J with respect to the parameter w

Backpropagation

$$\hat{y} = h_{\boldsymbol{\theta}}(\mathbf{x}) = g\left(w_5 \cdot g\left(w_4 \cdot g\left(w_3 \cdot g\left(w_2 \cdot g(w_1 \cdot x)\right)\right)\right)\right)$$

More efficient to start at the end and reuse values!

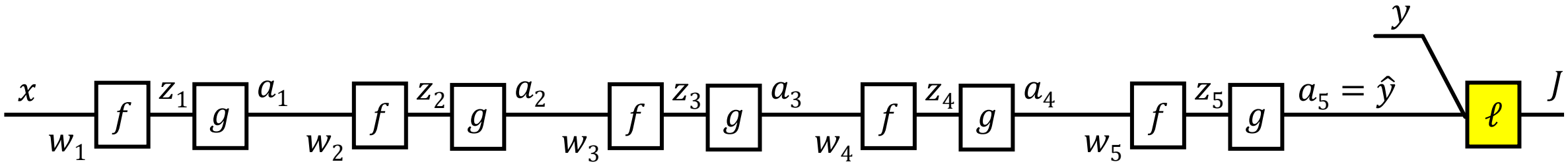

$$\frac{\partial J}{\partial \hat{y}} = \frac{\partial \ell}{\partial \hat{y}}$$

Backpropagation

$$\hat{y} = h_{\boldsymbol{\theta}}(\mathbf{x}) = g\left(w_5 \cdot g\left(w_4 \cdot g\left(w_3 \cdot g\left(w_2 \cdot g(w_1 \cdot x)\right)\right)\right)\right)$$

More efficient to start at the end and reuse values!

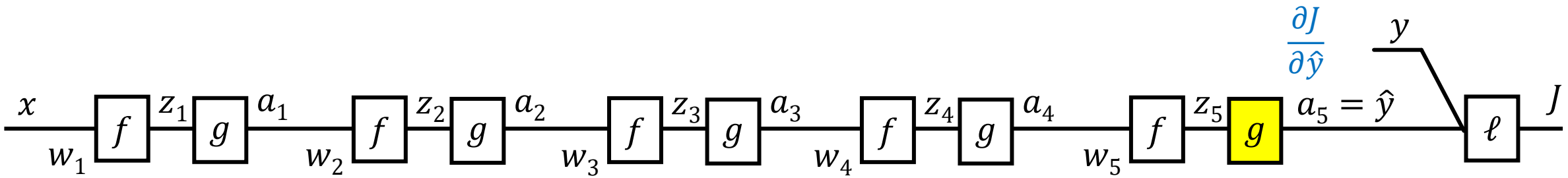

$$\frac{\partial J}{\partial z_5} = \frac{\partial J}{\partial \hat{y}} \frac{\partial g}{\partial z_5}$$

Backpropagation

$$\hat{y} = h_{\boldsymbol{\theta}}(\mathbf{x}) = g\left(w_5 \cdot g\left(w_4 \cdot g\left(w_3 \cdot g\left(w_2 \cdot g(w_1 \cdot x)\right)\right)\right)\right)$$

More efficient to start at the end and reuse values!

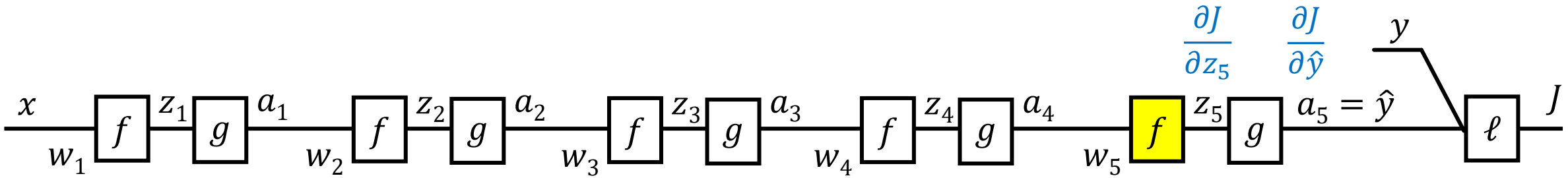

$$\frac{\partial J}{\partial a_4} = \frac{\partial J}{\partial z_5}\frac{\partial f}{\partial a_4}$$

$$\frac{\partial J}{\partial w_5} = \frac{\partial J}{\partial z_5}\frac{\partial f}{\partial w_5}$$

Backpropagation

$$\hat{y} = h_{\boldsymbol{\theta}}(\mathbf{x}) = g\left(w_5 \cdot g\left(w_4 \cdot g\left(w_3 \cdot g\left(w_2 \cdot g(w_1 \cdot x)\right)\right)\right)\right)$$

More efficient to start at the end and reuse values!

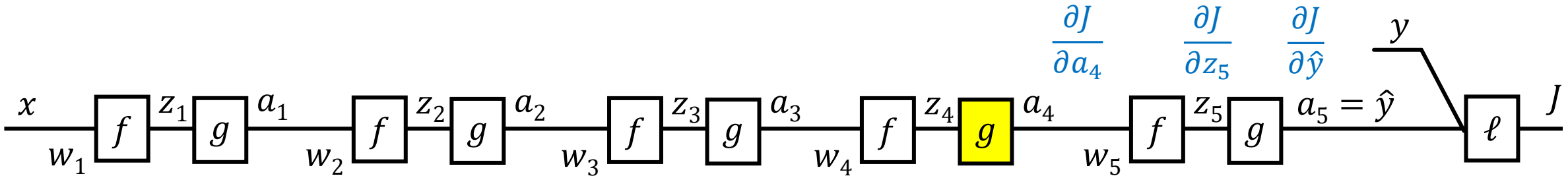

$$\frac{\partial J}{\partial z_4} = \frac{\partial J}{\partial a_4}\frac{\partial g}{\partial z_4}$$

Backpropagation

$$\hat{y} = h_{\boldsymbol{\theta}}(\mathbf{x}) = g\left(w_5 \cdot g\left(w_4 \cdot g\left(w_3 \cdot g\left(w_2 \cdot g(w_1 \cdot x)\right)\right)\right)\right)$$

More efficient to start at the end and reuse values!

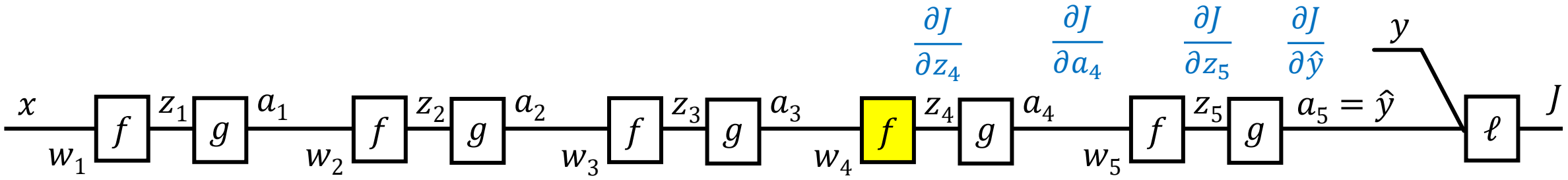

$$\frac{\partial J}{\partial a_3} = \frac{\partial J}{\partial z_4}\frac{\partial f}{\partial a_3}$$

$$\frac{\partial J}{\partial w_4} = \frac{\partial J}{\partial z_4}\frac{\partial f}{\partial w_4}$$

Backpropagation

$$\hat{y} = h_{\boldsymbol{\theta}}(\mathbf{x}) = g\left(w_5 \cdot g\left(w_4 \cdot g\left(w_3 \cdot g\left(w_2 \cdot g(w_1 \cdot x)\right)\right)\right)\right)$$

More efficient to start at the end and reuse values!

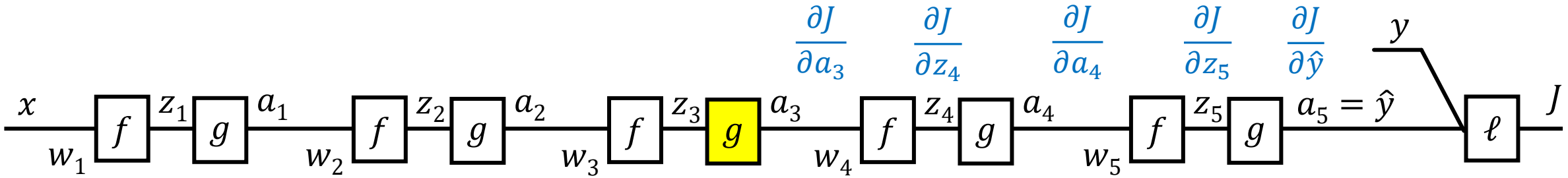

$$\frac{\partial J}{\partial z_3} = \frac{\partial J}{\partial a_3}\frac{\partial g}{\partial z_3}$$

Backpropagation

$$\hat{y} = h_{\boldsymbol{\theta}}(\mathbf{x}) = g\left(w_5 \cdot g\left(w_4 \cdot g\left(w_3 \cdot g\left(w_2 \cdot g(w_1 \cdot x)\right)\right)\right)\right)$$

More efficient to start at the end and reuse values!

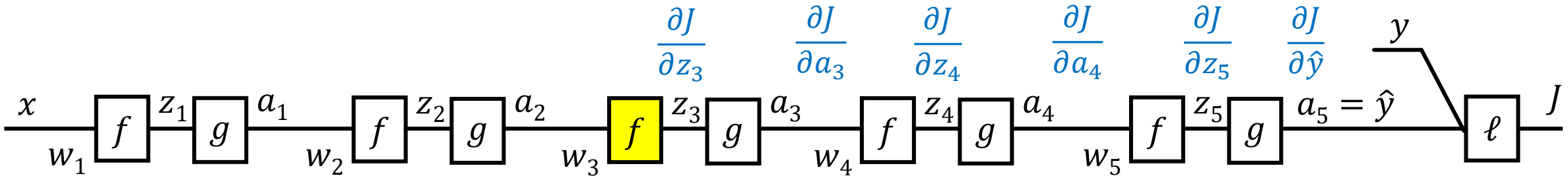

$$\frac{\partial J}{\partial a_2} = \frac{\partial J}{\partial z_3}\frac{\partial f}{\partial a_2}$$

$$\frac{\partial J}{\partial w_3} = \frac{\partial J}{\partial z_3}\frac{\partial f}{\partial w_3}$$

Backpropagation

$$\hat{y} = h_{\boldsymbol{\theta}}(\mathbf{x}) = g\left(w_5 \cdot g\left(w_4 \cdot g\left(w_3 \cdot g\left(w_2 \cdot g(w_1 \cdot x)\right)\right)\right)\right)$$

More efficient to start at the end and reuse values!

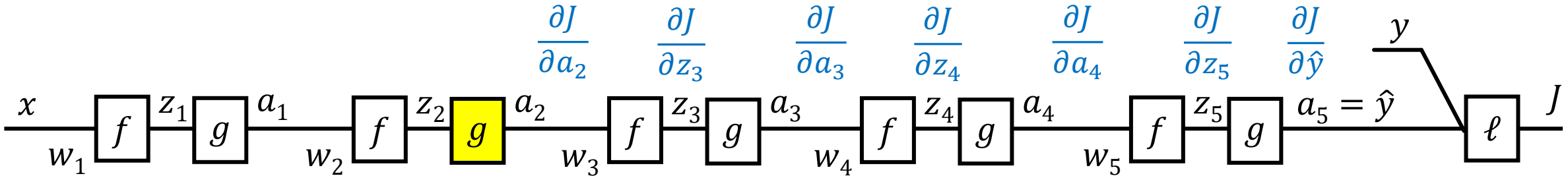

$$\frac{\partial J}{\partial z_2} = \frac{\partial J}{\partial a_2}\frac{\partial g}{\partial z_2}$$

Backpropagation

$$\hat{y} = h_{\boldsymbol{\theta}}(\mathbf{x}) = g\left(w_5 \cdot g\left(w_4 \cdot g\left(w_3 \cdot g\left(w_2 \cdot g(w_1 \cdot x)\right)\right)\right)\right)$$

More efficient to start at the end and reuse values!

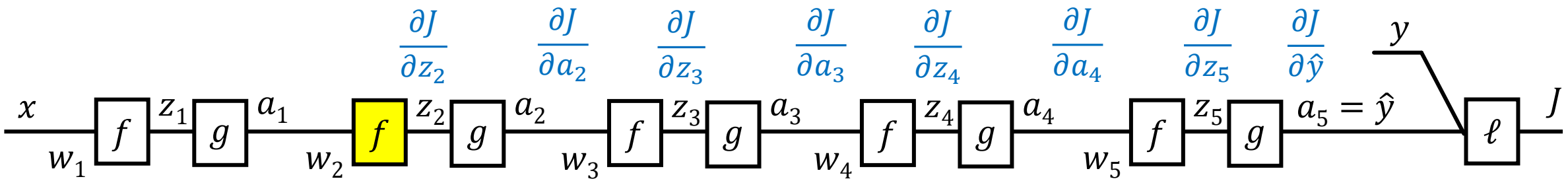

$$\frac{\partial J}{\partial a_1} = \frac{\partial J}{\partial z_2}\frac{\partial f}{\partial a_1}$$

$$\frac{\partial J}{\partial w_2} = \frac{\partial J}{\partial z_2}\frac{\partial f}{\partial w_2}$$

Backpropagation

$$\hat{y} = h_{\boldsymbol{\theta}}(\mathbf{x}) = g\left(w_5 \cdot g\left(w_4 \cdot g\left(w_3 \cdot g\left(w_2 \cdot g(w_1 \cdot x)\right)\right)\right)\right)$$

More efficient to start at the end and reuse values!

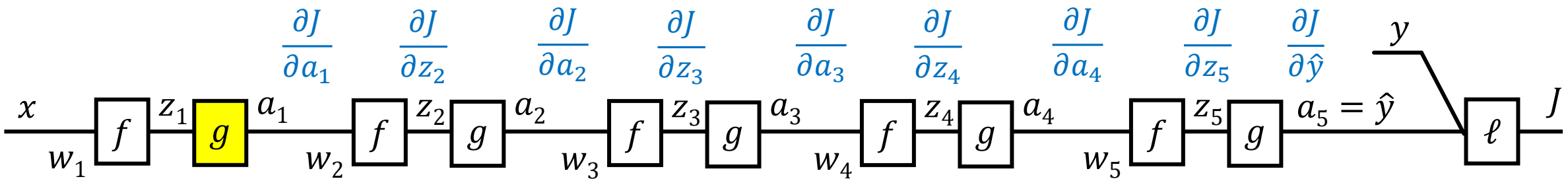

$$\frac{\partial J}{\partial z_1} = \frac{\partial J}{\partial a_1}\frac{\partial g}{\partial z_1}$$

Backpropagation

$$\hat{y} = h_{\boldsymbol{\theta}}(\mathbf{x}) = g\left(w_5 \cdot g\left(w_4 \cdot g\left(w_3 \cdot g\left(w_2 \cdot g(w_1 \cdot x)\right)\right)\right)\right)$$

More efficient to start at the end and reuse values!

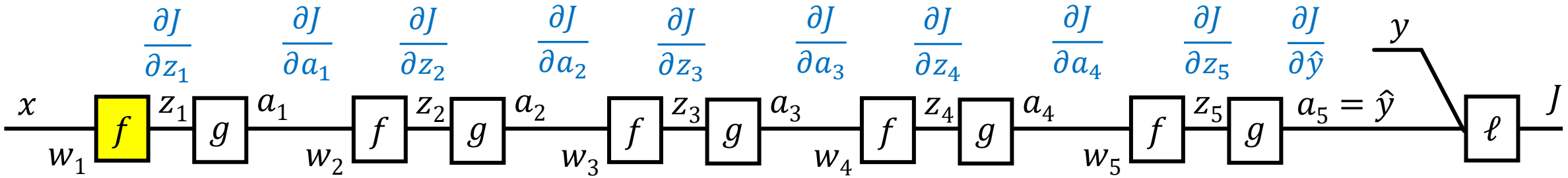

$$\frac{\partial J}{\partial w_1} = \frac{\partial J}{\partial z_1}\frac{\partial f}{\partial w_1}$$

Backpropagation

$$\hat{y} = h_{\boldsymbol{\theta}}(\mathbf{x}) = g\left(w_5 \cdot g\left(w_4 \cdot g\left(w_3 \cdot g\left(w_2 \cdot g(w_1 \cdot x)\right)\right)\right)\right)$$

More efficient to start at the end and reuse values!

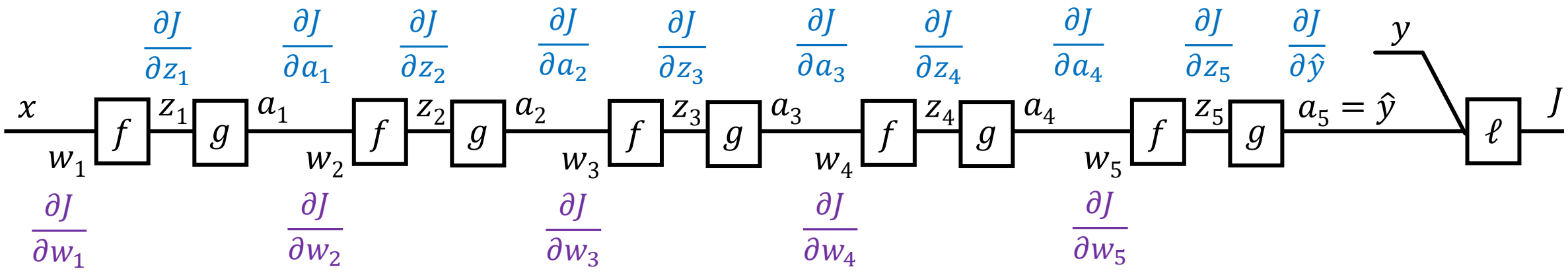

To do gradient descent we need the partial derivative of the objective with respect to each parameter, $w_\ell \leftarrow w_\ell - \alpha\, \partial J / \partial w_\ell$

The backward pass propagates the change in the objective with respect to intermediate values ($\partial J / \partial z_\ell$ and $\partial J / \partial a_\ell$) back through the network to produce each $\partial J / \partial w_\ell$

Generic Layer Implementation (so-far)

Compute derivatives per layer, utilizing previous derivatives

Objective: $J(\theta)$

Arbitrary layer: $\mathrm{z_{out}} = f(\mathrm{z_{in}}, \theta)$

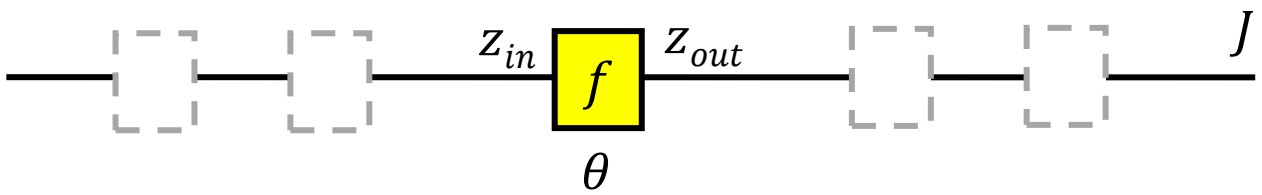

Need:

- $\dfrac{\partial J}{\partial z_{in}} = \dfrac{\partial J}{\partial z_{out}} \dfrac{\partial f}{\partial z_{in}}$
- $\dfrac{\partial J}{\partial \theta} = \dfrac{\partial J}{\partial z_{out}} \dfrac{\partial f}{\partial \theta}$

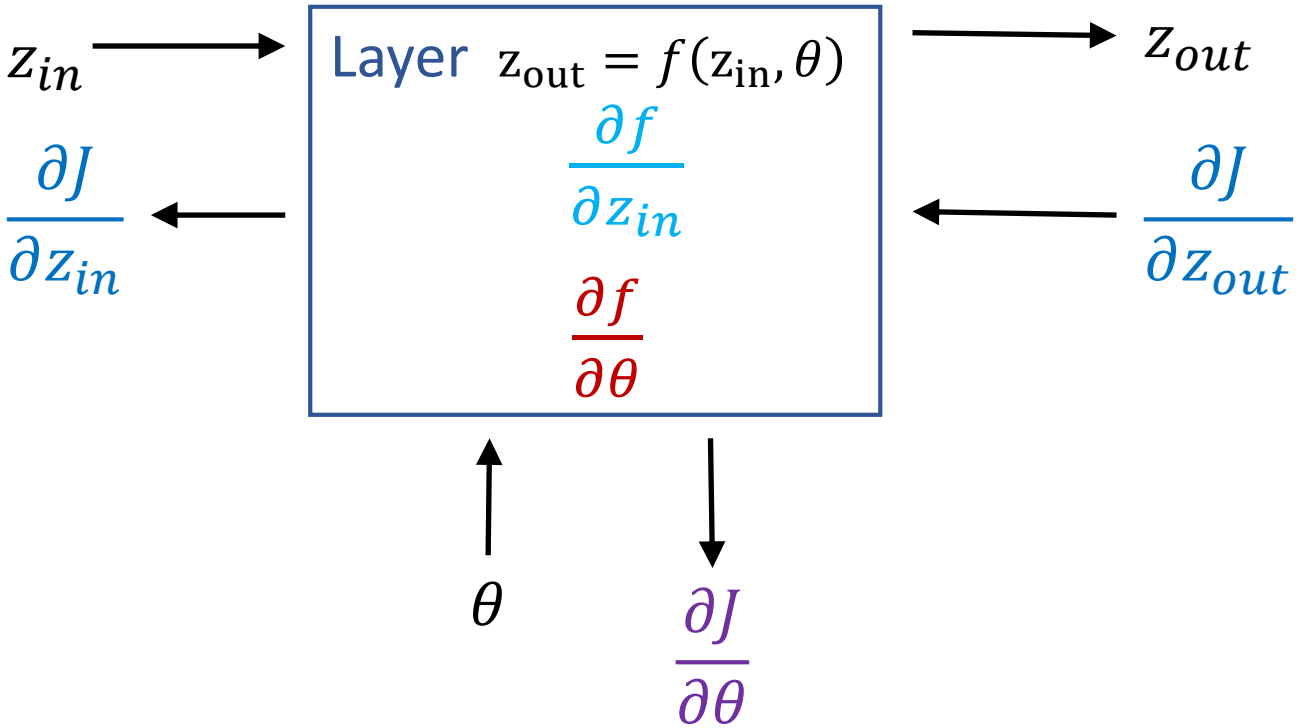

Optimization

$$\hat{y} = h_{\boldsymbol{\theta}}(\mathbf{x}) = g\left(b_{3,1} + \sum_k w_{3,1,k}\ g\left(b_{2,k} + \sum_i w_{2,k,i}\ g\left(b_{1,i} + \sum_j w_{1,i,j}\ x_j\right)\right)\right)$$

Tons of repeated partial derivatives

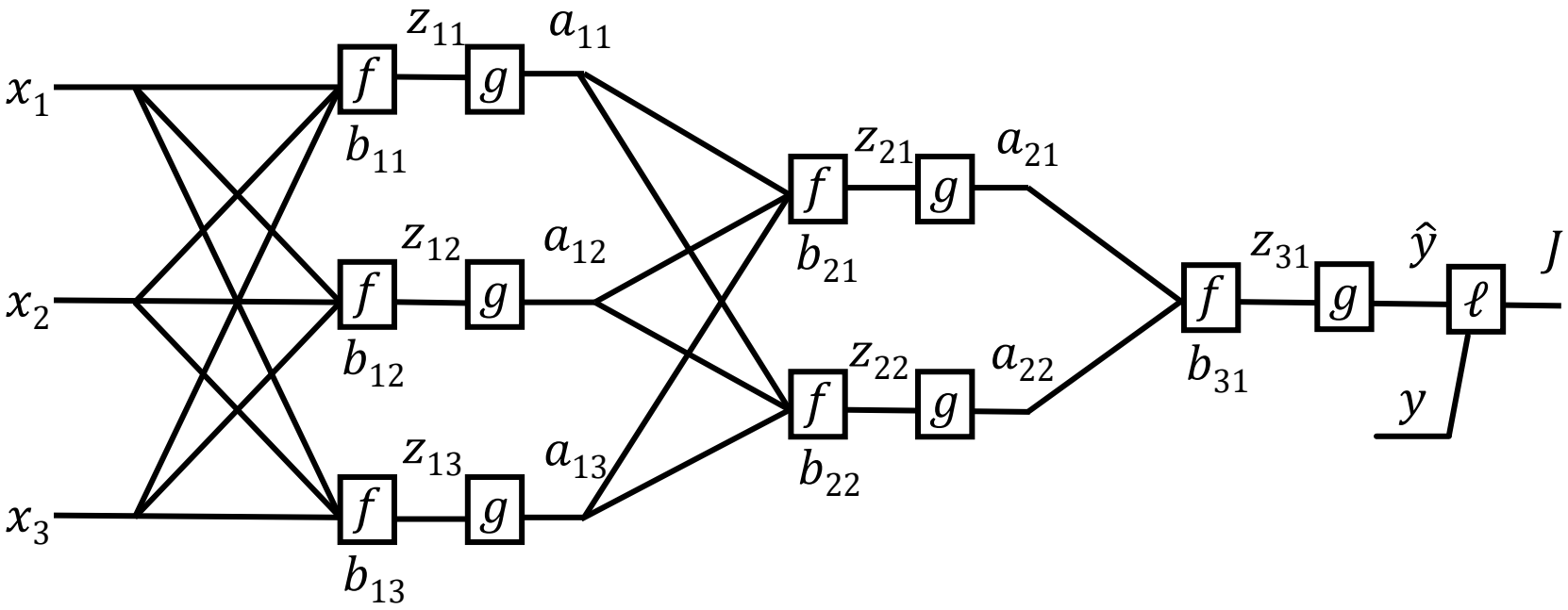

$$\frac{\partial J}{\partial b_{3,1}} = \frac{\partial \ell}{\partial \hat{y}} \frac{\partial a_{3,1}}{\partial z_{3,1}} \frac{\partial z_{3,1}}{\partial b_{3,1}}$$

$$\frac{\partial J}{\partial b_{2,i}} = \frac{\partial \ell}{\partial \hat{y}} \frac{\partial a_{3,1}}{\partial z_{3,1}} \frac{\partial z_{3,1}}{\partial a_{2,i}} \frac{\partial a_{2,i}}{\partial z_{2,i}} \frac{\partial z_{2,i}}{\partial b_{2,i}}$$

$$\frac{\partial J}{\partial b_{1,i}} = \frac{\partial \ell}{\partial \hat{y}} \frac{\partial a_{3,1}}{\partial z_{3,1}} \frac{\partial z_{3,1}}{\partial \mathbf{a}_2} \frac{\partial \mathbf{a}_2}{\partial \mathbf{z}_2} \frac{\partial \mathbf{z}_2}{\partial a_{1,i}} \frac{\partial a_{1,i}}{\partial z_{1,i}} \frac{\partial z_{1,i}}{\partial b_{1,i}}$$

Optimization

$$\hat{y} = h_{\boldsymbol{\theta}}(\mathbf{x}) = g\left(b_{3,1} + \sum_k w_{3,1,k}\ g\left(b_{2,k} + \sum_i w_{2,k,i}\ g\left(b_{1,i} + \sum_j w_{1,i,j}\ x_j\right)\right)\right)$$

Tons of repeated partial derivatives

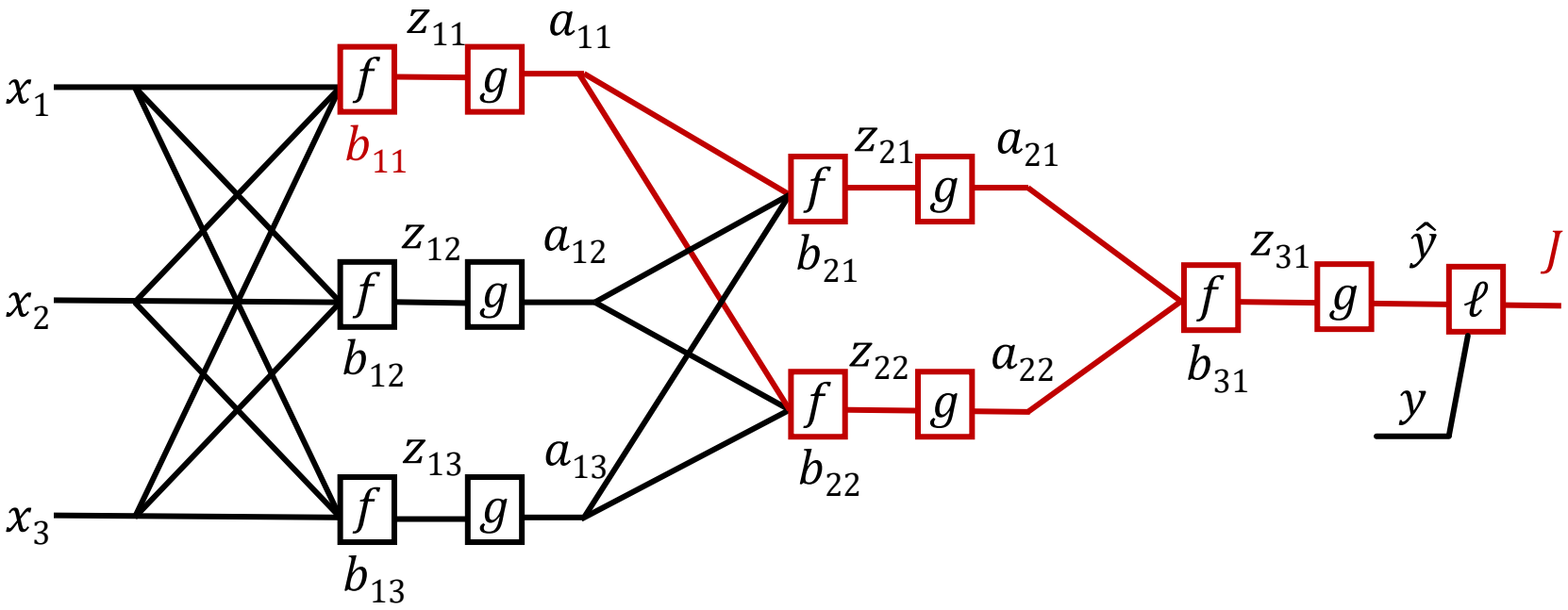

$$\frac{\partial J}{\partial b_{3,1}} = \frac{\partial \ell}{\partial \hat{y}} \frac{\partial a_{3,1}}{\partial z_{3,1}} \frac{\partial z_{3,1}}{\partial b_{3,1}}$$

$$\frac{\partial J}{\partial b_{2,i}} = \frac{\partial \ell}{\partial \hat{y}} \frac{\partial a_{3,1}}{\partial z_{3,1}} \frac{\partial z_{3,1}}{\partial a_{2,i}} \frac{\partial a_{2,i}}{\partial z_{2,i}} \frac{\partial z_{2,i}}{\partial b_{2,i}}$$

$$\frac{\partial J}{\partial b_{1,i}} = \frac{\partial \ell}{\partial \hat{y}} \frac{\partial a_{3,1}}{\partial z_{3,1}} \frac{\partial z_{3,1}}{\partial \mathbf{a}_2} \frac{\partial \mathbf{a}_2}{\partial \mathbf{z}_2} \frac{\partial \mathbf{z}_2}{\partial a_{1,i}} \frac{\partial a_{1,i}}{\partial z_{1,i}} \frac{\partial z_{1,i}}{\partial b_{1,i}}$$

Calculus Time-out

Reminder: Partial Derivatives

Calculus with Linear Algebra

Functions with different combinations of input and output sizes

$$y = \mathrm{f}(x)$$

$$y = \mathrm{f}\left(\begin{bmatrix} x_1 \\ \vdots \\ x_M \end{bmatrix}\right)$$

$$y = \mathrm{f}\left(\begin{bmatrix} X_{1,1} & \cdots & X_{1,L} \\ \vdots & \ddots & \vdots \\ X_{M,1} & \cdots & X_{M,L} \end{bmatrix}\right)$$

$$\begin{bmatrix} y_1 \\ \vdots \\ y_N \end{bmatrix} = \mathrm{f}(x)$$

$$\begin{bmatrix} y_1 \\ \vdots \\ y_N \end{bmatrix} = \mathrm{f}\left(\begin{bmatrix} x_1 \\ \vdots \\ x_M \end{bmatrix}\right)$$

$$\begin{bmatrix} y_1 \\ \vdots \\ y_N \end{bmatrix} = \mathrm{f}\left(\begin{bmatrix} X_{1,1} & \cdots & X_{1,L} \\ \vdots & \ddots & \vdots \\ X_{M,1} & \cdots & X_{M,L} \end{bmatrix}\right)$$

$$\begin{bmatrix} Y_{1,1} & \cdots & Y_{1,K} \\ \vdots & \ddots & \vdots \\ Y_{N,K} & \cdots & Y_{N,K} \end{bmatrix} = \mathrm{f}(x)$$

$$\begin{bmatrix} Y_{1,1} & \cdots & Y_{1,K} \\ \vdots & \ddots & \vdots \\ Y_{N,K} & \cdots & Y_{N,K} \end{bmatrix} = \mathrm{f}\left(\begin{bmatrix} x_1 \\ \vdots \\ x_M \end{bmatrix}\right)$$

$$\begin{bmatrix} Y_{1,1} & \cdots & Y_{1,K} \\ \vdots & \ddots & \vdots \\ Y_{N,K} & \cdots & Y_{N,K} \end{bmatrix} = \mathrm{f}\left(\begin{bmatrix} X_{1,1} & \cdots & X_{1,L} \\ \vdots & \ddots & \vdots \\ X_{M,1} & \cdots & X_{M,L} \end{bmatrix}\right)$$

Calculus with Linear Algebra

Collection of partial derivatives for **every pair of scalar inputs and outputs**

One way to think of it: a bag of partial derivatives

$$\begin{bmatrix} y_1 \\ \vdots \\ y_N \end{bmatrix} = \mathrm{f}\left(\begin{bmatrix} x_1 \\ \vdots \\ x_M \end{bmatrix}\right)$$

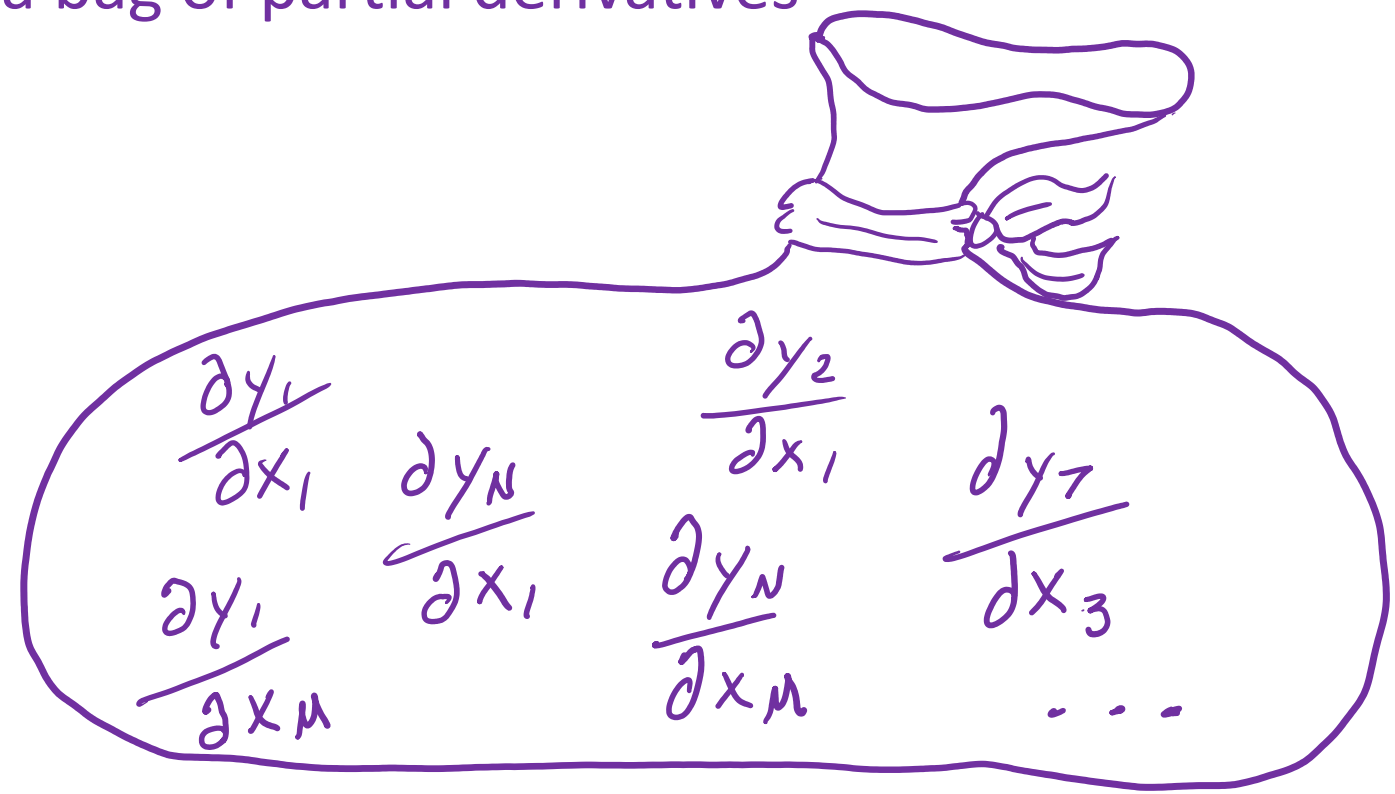

Calculus with Linear Algebra

Collection of partial derivatives for **every pair of scalar inputs and outputs**

One way to think of it: a bag of partial derivatives

$$\begin{bmatrix} Y_{1,1} & \cdots & Y_{1,K} \\ \vdots & \ddots & \vdots \\ Y_{N,1} & \cdots & Y_{N,K} \end{bmatrix} = \mathrm{f}\left(\begin{bmatrix} X_{1,1} & \cdots & X_{1,L} \\ \vdots & \ddots & \vdots \\ X_{M,1} & \cdots & X_{M,L} \end{bmatrix}\right)$$

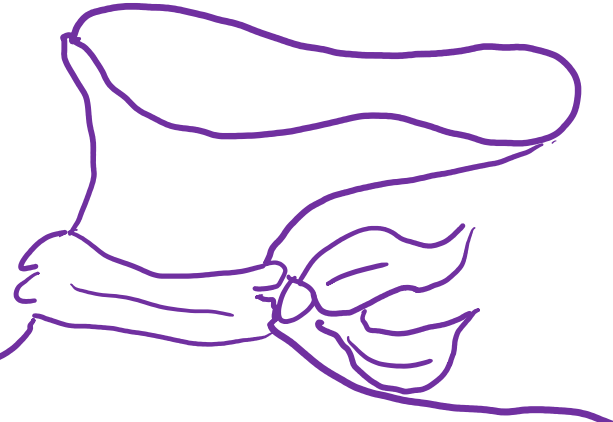

$$\frac{\partial Y_{11}}{\partial X_{11}} \quad \frac{\partial Y_{1K}}{\partial X_{11}} \quad \frac{\partial Y_{NK}}{\partial X_{ML}} \quad \frac{\partial Y_{1K}}{\partial X_{ML}}$$

$$\frac{\partial Y_{NK}}{\partial X_{11}} \quad \frac{\partial Y_{2,3}}{\partial X_{1,5}} \quad \frac{\partial Y_{11}}{\partial X_{1L}} \quad \cdots$$

Organization Convention: Denominator Layout

Transpose of numerator layout

$y = f(x)$	$x \in \mathbb{R}$	$\mathbf{x} \in \mathbb{R}^{\mathrm{M}}$	$X \in \mathbb{R}^{\mathrm{M}\times L}$
$y \in \mathbb{R}$	$\frac{\partial y}{\partial x} \in \mathbb{R}$	$\frac{\partial y}{\partial \mathbf{x}} \in \mathbb{R}^{M\times 1}$ Input by output	$\frac{\partial y}{\partial X} \in \mathbb{R}^{M\times L}$ Size of input
$\mathbf{y} \in \mathbb{R}^{N}$	$\frac{\partial \mathbf{y}}{\partial x} \in \mathbb{R}^{1\times N}$ Input by output	Jacobian $\frac{\partial \mathbf{y}}{\partial \mathbf{x}} \in \mathbb{R}^{M\times N}$ Input by output	$\frac{\partial \mathbf{y}}{\partial X} \in \mathbb{R}^{?}$?
$Y \in \mathbb{R}^{N\times K}$	$\frac{\partial Y}{\partial x} \in \mathbb{R}^{K\times N}$ Transpose of output	$\frac{\partial Y}{\partial \mathbf{x}} \in \mathbb{R}^{?}$?	$\frac{\partial Y}{\partial X} \in \mathbb{R}^{?}$?

Organization Convention: Numerator Layout

$y = f(x)$	$x \in \mathbb{R}$	$\mathbf{x} \in \mathbb{R}^{\mathrm{M}}$	$X \in \mathbb{R}^{\mathrm{M} \times L}$
$y \in \mathbb{R}$	$\frac{\partial y}{\partial x} \in \mathbb{R}$	$\frac{\partial y}{\partial \mathbf{x}} \in \mathbb{R}^{1 \times M}$ Output by input	$\frac{\partial y}{\partial X} \in \mathbb{R}^{L \times M}$ Transpose of input
$\mathbf{y} \in \mathbb{R}^{N}$	$\frac{\partial \mathbf{y}}{\partial x} \in \mathbb{R}^{N \times 1}$ Output by input	$\frac{\partial \mathbf{y}}{\partial \mathbf{x}} \in \mathbb{R}^{N \times M}$ Output by input	$\frac{\partial \mathbf{y}}{\partial X} \in \mathbb{R}^{?}$?
$Y \in \mathbb{R}^{N \times K}$	$\frac{\partial Y}{\partial x} \in \mathbb{R}^{N \times K}$ Size of output	$\frac{\partial Y}{\partial \mathbf{x}} \in \mathbb{R}^{?}$?	$\frac{\partial Y}{\partial X} \in \mathbb{R}^{?}$?

Multivariate-chain rule

Calculus Chain Rule

Scalar:

$$y = f(z)$$

$$z = g(x)$$

$$\frac{dy}{dx} = \frac{dy}{dz}\frac{dz}{dx}$$

Multivariate:

$$y = f(\boldsymbol{z})$$

$$\boldsymbol{z} = g(x)$$

$$\frac{dy}{dx} = \sum_j \frac{\partial y}{\partial z_j}\frac{\partial z_j}{\partial x}$$

Multivariate:

$$\mathbf{y} = f(\boldsymbol{z})$$

$$\boldsymbol{z} = g(\mathbf{x})$$

$$\frac{dy_{\mathrm{i}}}{dx_{\mathrm{k}}} = \sum_j \frac{\partial y_i}{\partial z_j}\frac{\partial z_j}{\partial x_{\mathrm{k}}}$$

Calculus Chain Rule

Scalar:

$$y = f(z)$$

$$z = g(x)$$

$$\frac{dy}{dx} = \frac{dy}{dz}\frac{dz}{dx}$$

Multivariate:

$$y = f(\boldsymbol{z})$$

$$\boldsymbol{z} = g(x)$$

$$\frac{dy}{dx} = \sum_j \frac{\partial y}{\partial z_j}\frac{\partial z_j}{\partial x}$$

Multivariate:

$$\mathbf{y} = f(\boldsymbol{z})$$

$$\boldsymbol{z} = g(\mathbf{x})$$

$$\frac{dy_{\mathrm{i}}}{dx_{\mathrm{k}}} = \sum_j \frac{\partial y_i}{\partial z_j}\frac{\partial z_j}{\partial x_{\mathrm{k}}}$$

Calculus Chain Rule

scalar → Vector → scalar: $\mathbb{R} \rightarrow \mathbb{R}^K \rightarrow \mathbb{R}$

$$y = f(\boldsymbol{z})$$

$$\boldsymbol{z} = g(x)$$

Breakdown into scalars

$$\frac{dy}{dx}$$

Numerator layout

$$\frac{dy}{dx} = \frac{\partial y}{\partial \mathbf{z}} \frac{\partial \mathbf{z}}{\partial x}$$

Denominator layout

$$\frac{dy}{dx} = \frac{\partial \mathbf{z}}{\partial x} \frac{\partial y}{\partial \mathbf{z}}$$

$$\frac{dy}{dx} = \sum_j \frac{\partial y}{\partial z_j} \frac{\partial z_j}{\partial x}$$

Calculus Chain Rule

Vector → Vector → scalar: $\mathbb{R}^M \rightarrow \mathbb{R}^K \rightarrow \mathbb{R}$

$$y = f(\boldsymbol{z})$$

$$\boldsymbol{z} = g(\mathbf{v})$$

Breakdown into scalars

$$\frac{dy}{d\mathbf{v}}$$

Numerator layout

$$\frac{dy}{d\mathbf{v}} = \frac{\partial y}{\partial \mathbf{z}} \frac{\partial \mathbf{z}}{\partial \mathbf{v}}$$

Denominator layout

$$\frac{dy}{d\mathbf{v}} = \frac{\partial \mathbf{z}}{\partial \mathbf{v}} \frac{\partial y}{\partial \mathbf{z}}$$

$$\frac{dy}{dv_{\mathrm{k}}} = \sum_j \frac{\partial y}{\partial z_j} \frac{\partial z_j}{\partial v_{\mathrm{k}}}$$

Multivariable Chain Rule

	Numerator layout	Denominator layout	Notes
$\frac{d}{dt}\ f\left(g(t), h(t)\right)$	$\frac{df}{dg}\frac{dg}{dt} + \frac{df}{dh}\frac{dh}{dt}$	Same	$f : (\mathbb{R} \times \mathbb{R}) \to \mathbb{R},\ t \in \mathbb{R}$ $g : \mathbb{R} \to \mathbb{R},\ h : \mathbb{R} \to \mathbb{R}$
$\frac{d}{dt}\ f\left(g_1(t), \ldots, g_N(t)\right)$	$\sum_{i=1}^{N} \frac{df}{dg_i}\frac{dg_i}{dt}$	Same	$h : (\mathbb{R} \times \cdots \times \mathbb{R}) \to \mathbb{R},\ t \in \mathbb{R}$ $f_i : \mathbb{R} \to \mathbb{R}\ \ \forall i \in \{1, \ldots, N\}$
$\frac{d}{dt}\ f(\mathbf{g}(t))$	$\frac{\partial f}{\partial \mathbf{g}}\frac{\partial \mathbf{g}}{\partial t}$	$\frac{\partial \mathbf{g}}{\partial t}\frac{\partial f}{\partial \mathbf{g}}$	$f : \mathbb{R}^N \to \mathbb{R},\ \mathbf{g} : \mathbb{R} \to \mathbb{R}^N$ $t \in \mathbb{R}$
$\frac{\partial}{\partial \mathbf{v}}\ f(\mathbf{g}(\mathbf{v}))$	$\frac{\partial f}{\partial \mathbf{g}}\frac{\partial \mathbf{g}}{\partial \mathbf{v}}$	$\frac{\partial \mathbf{g}}{\partial \mathbf{v}}\frac{\partial f}{\partial \mathbf{g}}$	$f : \mathbb{R}^N \to \mathbb{R},\ \mathbf{g} : \mathbb{R}^M \to \mathbb{R}^N$ $\mathbf{v} \in \mathbb{R}^M$
$\frac{\partial}{\partial \mathbf{v}}\ f(\mathbf{g}(\mathbf{v}), \mathbf{h}(\mathbf{v}))$	$\frac{\partial f}{\partial \mathbf{g}}\frac{\partial \mathbf{g}}{\partial \mathbf{v}} + \frac{\partial f}{\partial \mathbf{h}}\frac{\partial \mathbf{h}}{\partial \mathbf{v}}$	$\frac{\partial \mathbf{g}}{\partial \mathbf{v}}\frac{\partial f}{\partial \mathbf{g}} + \frac{\partial \mathbf{h}}{\partial \mathbf{v}}\frac{\partial f}{\partial \mathbf{h}}$	$h : \mathbb{R}^K \times \mathbb{R}^N \to \mathbb{R},\ \mathbf{v} \in \mathbb{R}^M$ $f : \mathbb{R}^M \to \mathbb{R}^K,\ \mathbf{g} : \mathbb{R}^M \to \mathbb{R}^N$

Backpropagation (vector version)

Vector version ← WIDER

Generic Layer Implementation (vector output version)

Compute derivatives per layer, utilizing previous derivatives

Objective: $J(\theta)$

Arbitrary layer: $\mathrm{z}_{\mathrm{out}} = f(\mathrm{z}_{\mathrm{in}}, \theta)$

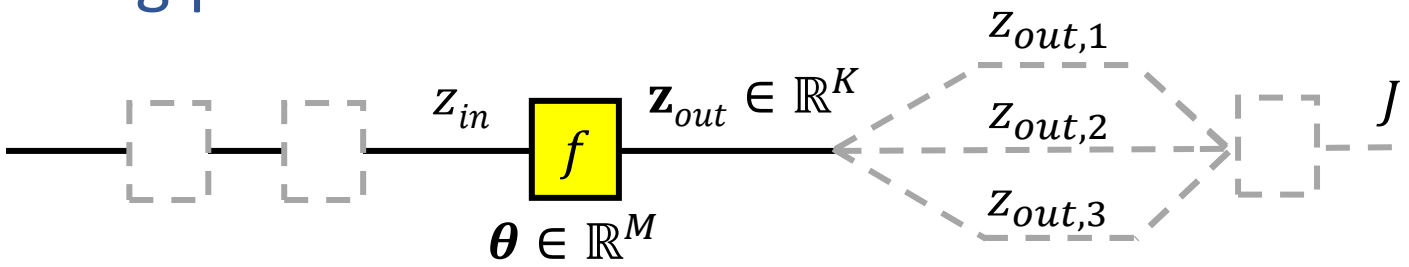

Need:

- $\dfrac{\partial J}{\partial z_{in}} =$
- $\dfrac{\partial J}{\partial \theta_j} =$

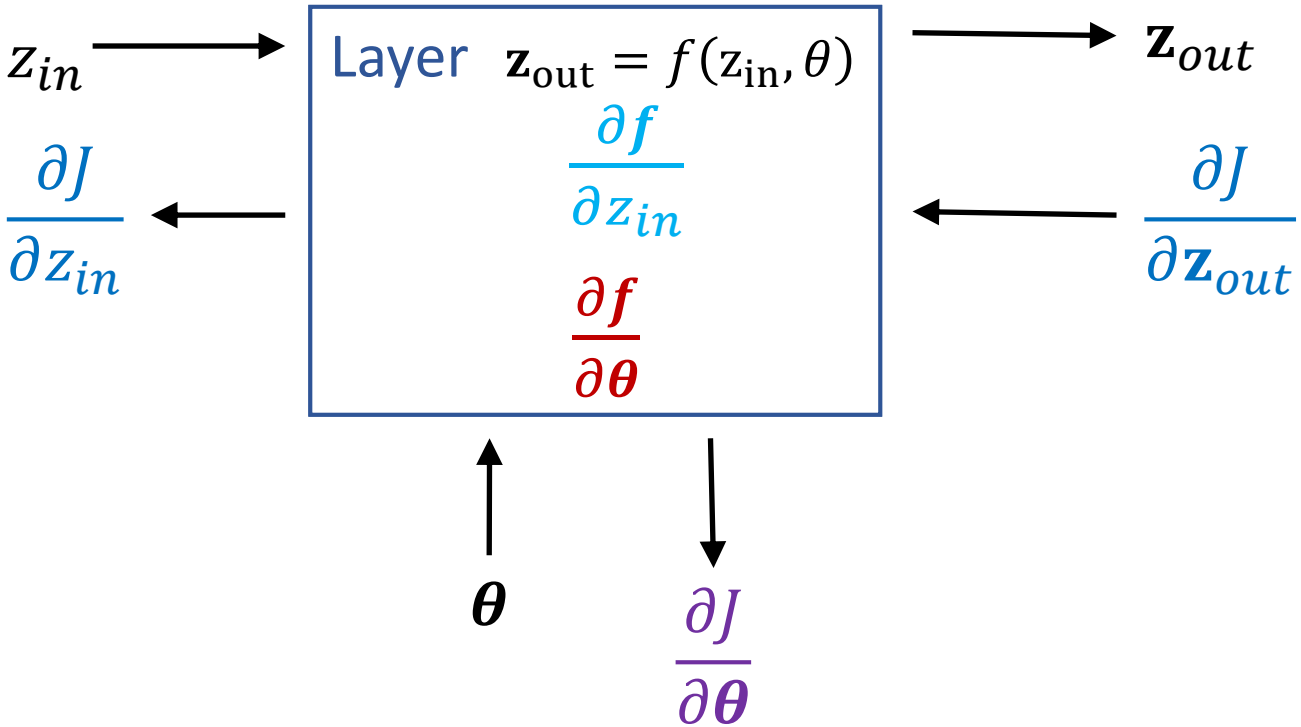

Generic Layer Implementation (vector output version)

Compute derivatives per layer, utilizing previous derivatives

Objective: $J(\theta)$

Arbitrary layer: $\mathrm{z_{out}} = f(\mathrm{z_{in}}, \theta)$

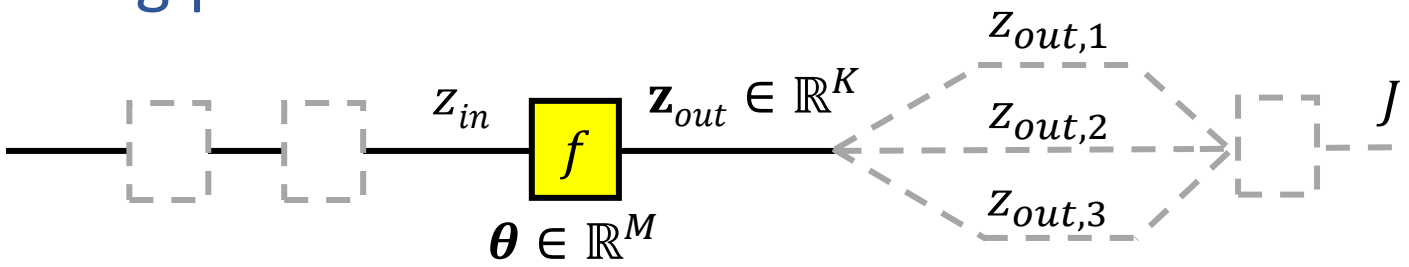

Need:

- $\dfrac{\partial J}{\partial z_{in}} = \sum_k \dfrac{\partial J}{\partial z_{out,k}} \dfrac{\partial z_{out,k}}{\partial z_{in}}$
- $\dfrac{\partial J}{\partial \theta_j} = \sum_k \dfrac{\partial J}{\partial z_{out,k}} \dfrac{\partial f}{\partial \theta_j}$

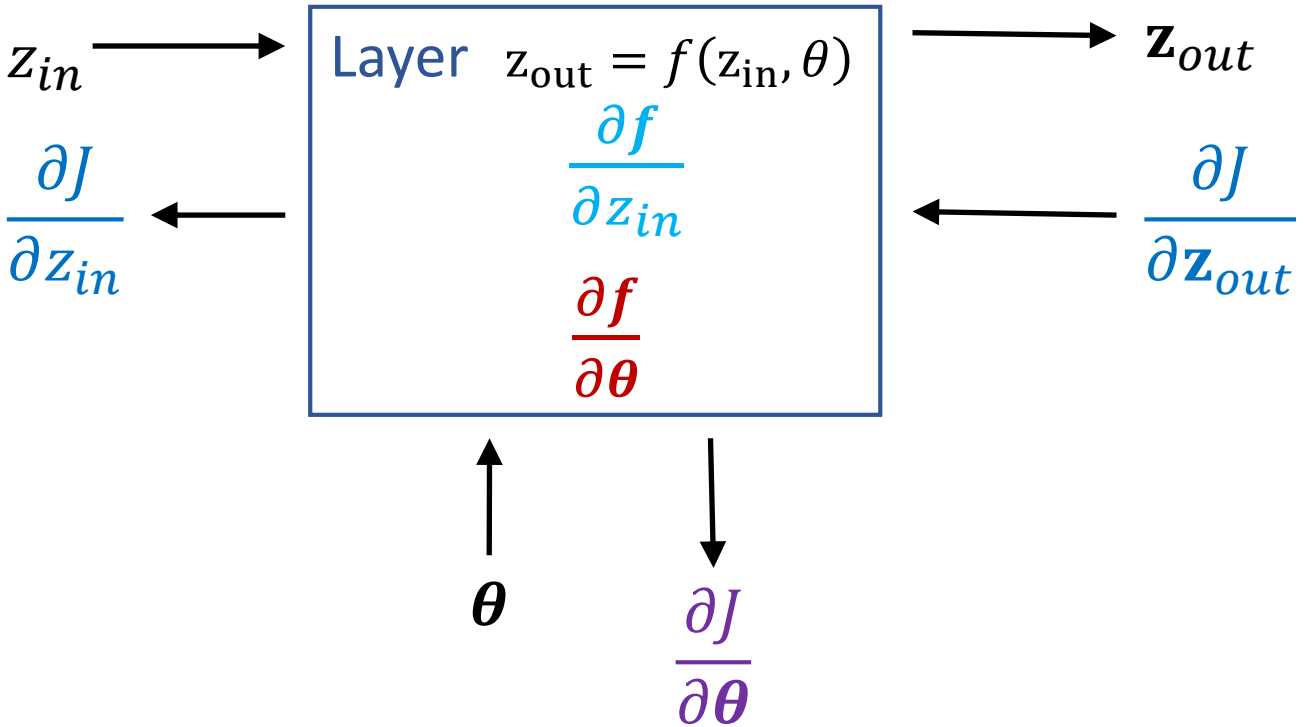

Linear Layer Implementation

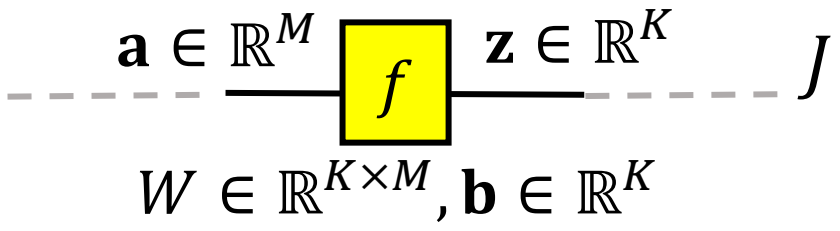

Compute derivatives per layer

Objective: $J(\theta)$

Layer: $\mathbf{z} = f(\mathbf{a}, W, \mathbf{b}) = W\mathbf{a} + \mathbf{b}$

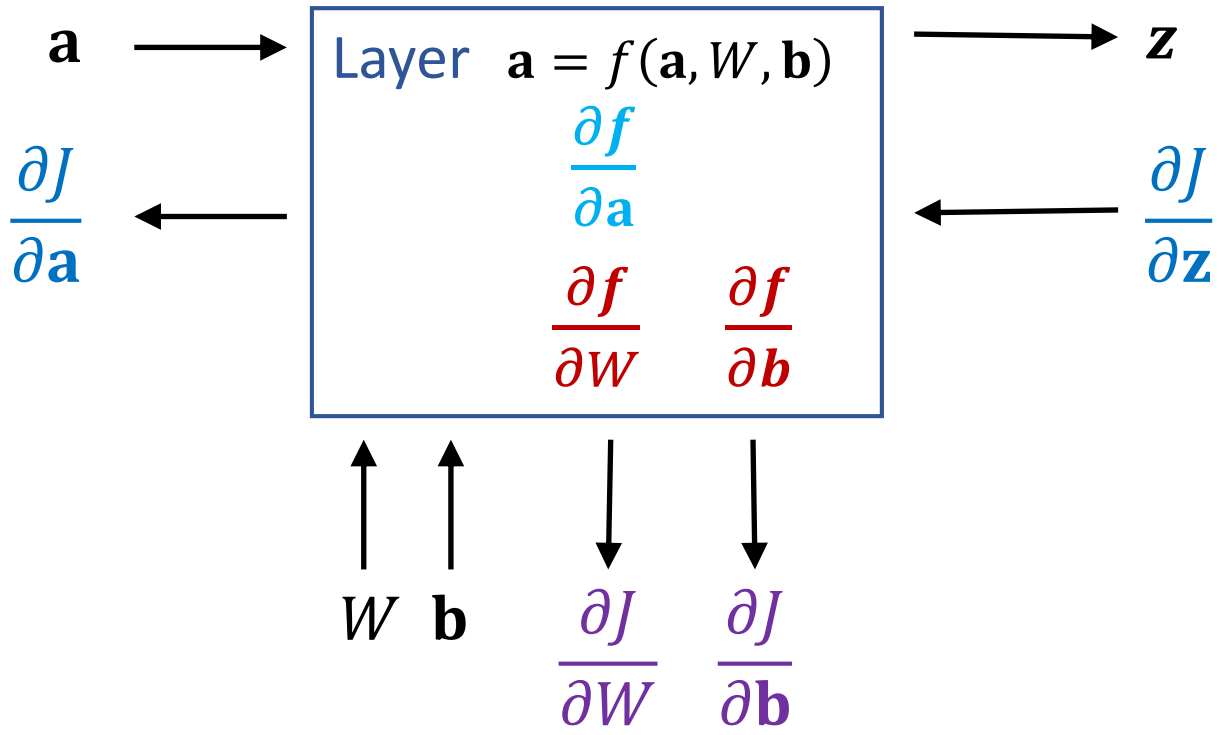

Scalar version (no formatting)

- $\frac{\partial J}{\partial a_j} =$
- $\frac{\partial J}{\partial W_{i,j}} =$
- $\frac{\partial J}{\partial b_i} =$

$$\mathbf{z} = W\mathbf{a} + \mathbf{b}$$

$$z_k = b_k + \sum_j W_{k,j} a_j$$

Linear Layer Implementation

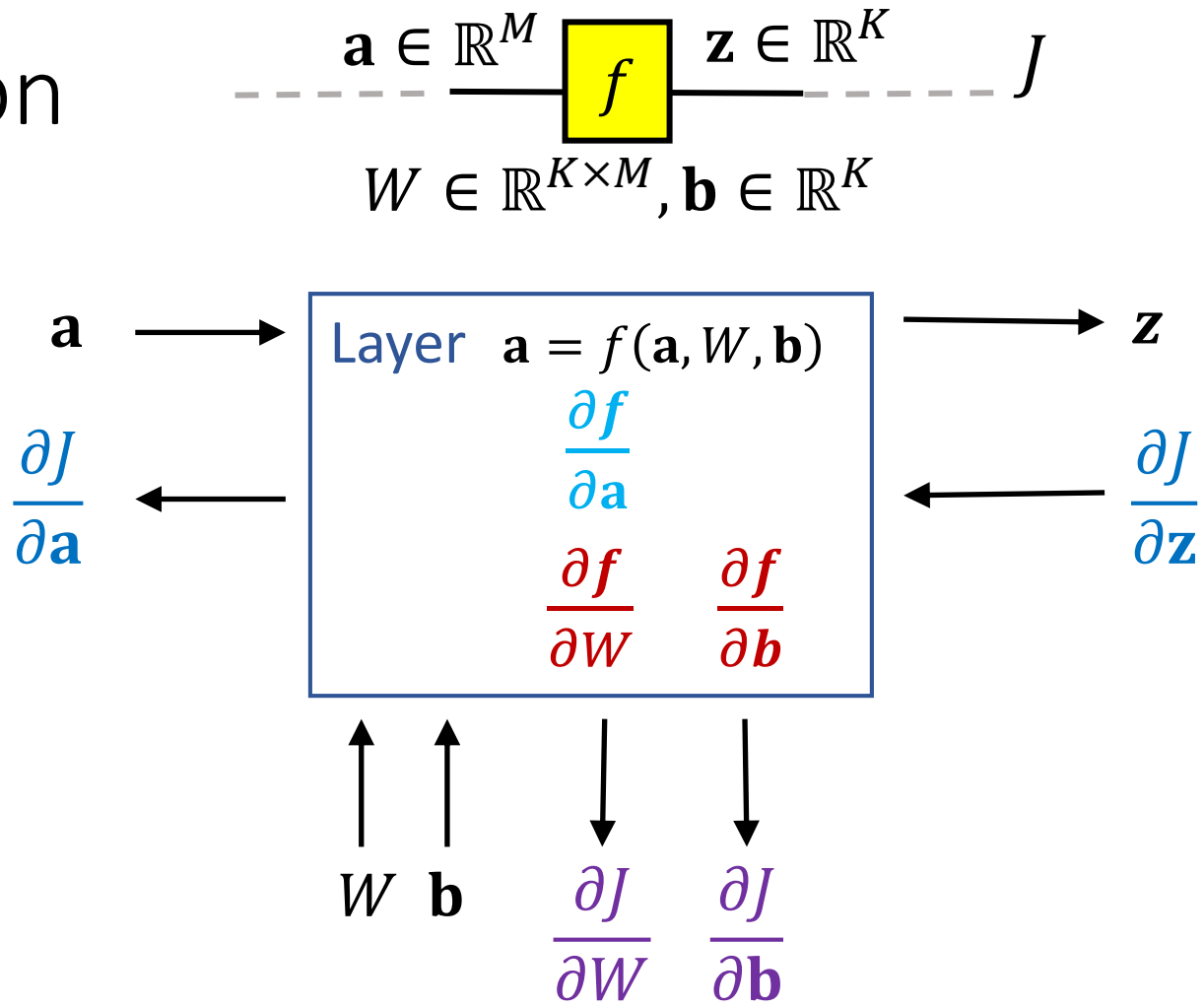

Compute derivatives per layer

Objective: $J(\theta)$

Layer: $\mathbf{z} = f(\mathbf{a}, W, \mathbf{b}) = W\mathbf{a} + \mathbf{b}$

Scalar version (no formatting)

- $\frac{\partial J}{\partial a_j} = \sum_k \frac{\partial J}{\partial z_k} \frac{\partial z_k}{\partial a_j}$
- $\frac{\partial J}{\partial W_{i,j}} = \sum_k \frac{\partial J}{\partial z_k} \frac{\partial z_k}{\partial W_{i,j}}$
- $\frac{\partial J}{\partial b_i} = \sum_k \frac{\partial J}{\partial z_k} \frac{\partial z_k}{\partial b_i}$

$$\mathbf{z} = W\mathbf{a} + \mathbf{b}$$

$$z_k = b_k + \sum_j W_{k,j} a_j$$

Linear Layer Implementation

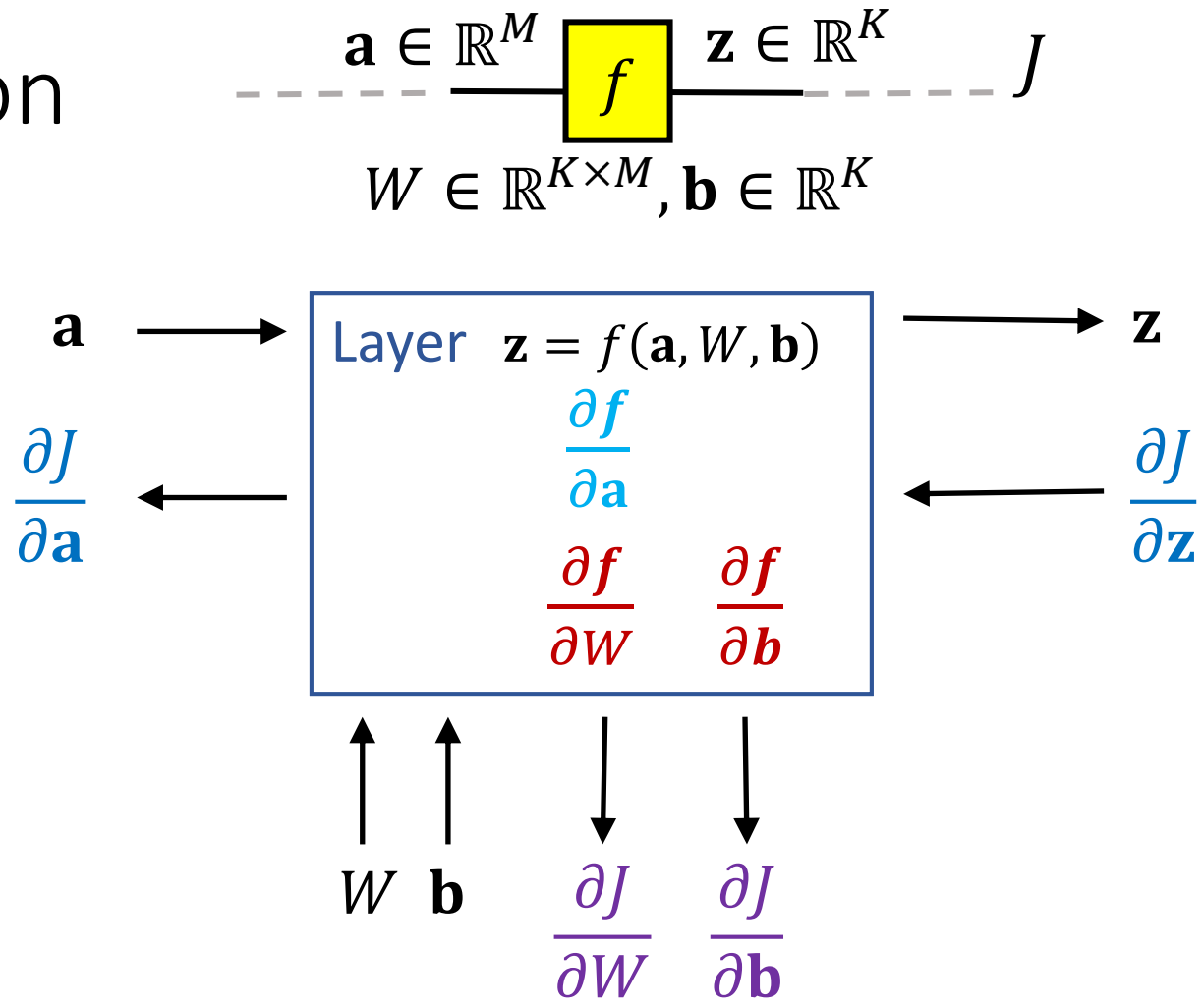

Compute derivatives per layer

Objective: $J(\theta)$

Layer: $\mathbf{z} = f(\mathbf{a}, W, \mathbf{b}) = W\mathbf{a} + \mathbf{b}$

(Denominator format)

- $\frac{\partial J}{\partial \mathbf{a}}$
- $\frac{\partial J}{\partial W}$
- $\frac{\partial J}{\partial \mathbf{b}}$

Summary

1. **Neural Networks…**
   - provide a way of learning features
   - are highly nonlinear prediction functions
   - (can be) a highly parallel network of logistic regression classifiers
   - discover useful hidden representations of the input
2. **Backpropagation…**
   - provides an efficient way to compute gradients
   - is a special case of reverse-mode automatic differentiation

Backprop Objectives

You should be able to…

- Differentiate between a neural network diagram and a computation graph
- Construct a computation graph for a function as specified by an algorithm
- Carry out the backpropagation on an arbitrary computation graph
- Construct a computation graph for a neural network, identifying all the given and intermediate quantities that are relevant
- Instantiate the backpropagation algorithm for a neural network
- Instantiate an optimization method (e.g. SGD) when the parameters of a model are comprised of several matrices corresponding to different layers of a neural network
- Apply the empirical risk minimization framework to learn a neural network
- Use the finite difference method to evaluate the gradient of a function
- Identify when the gradient of a function can be computed at all and when it can be computed efficiently
- Employ basic matrix calculus to compute vector/matrix/tensor derivatives.