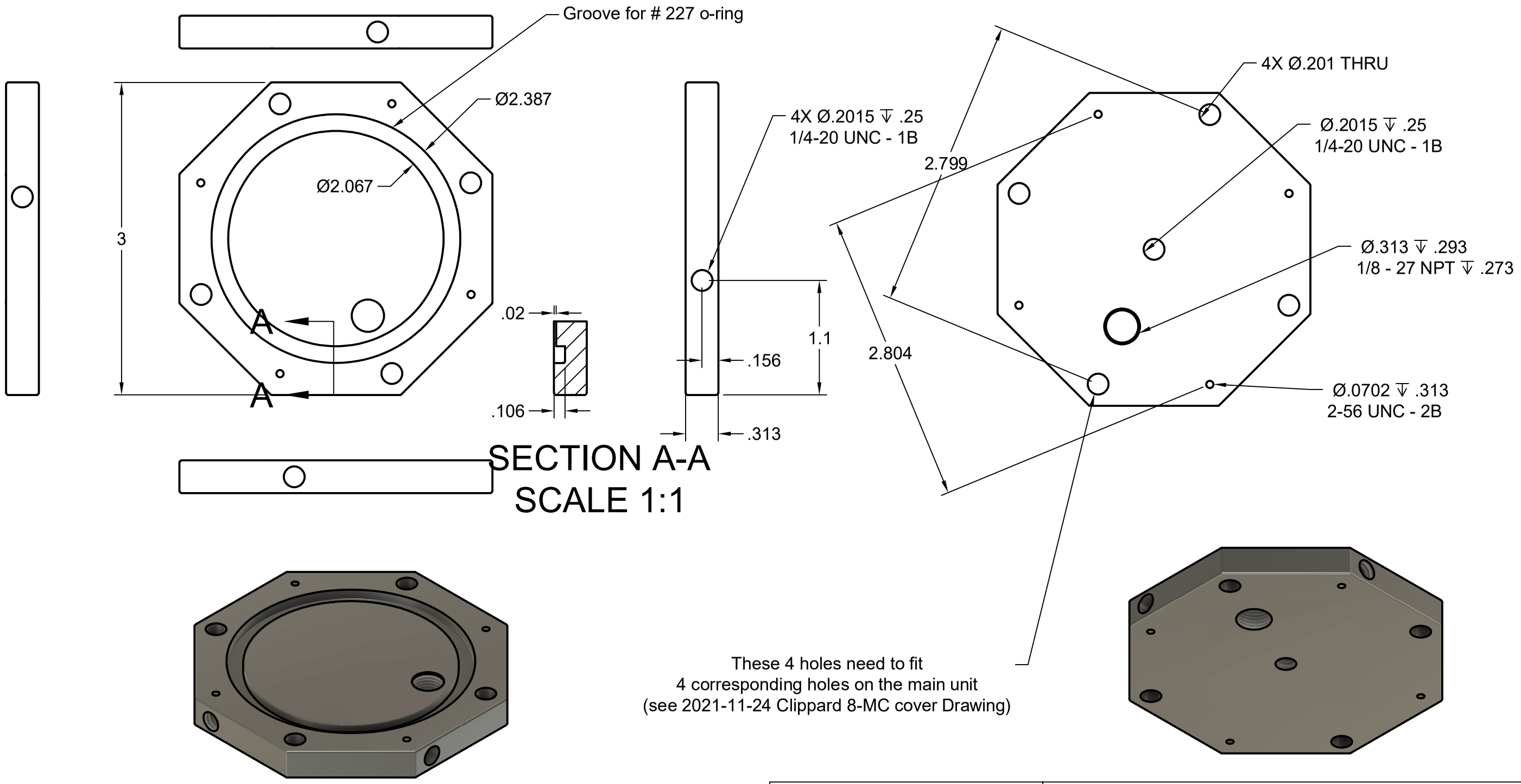

	PROJECT Mixing chambers			
	TITLE 2021-11-24 Clippard 8-MC cover			
APPROVED	SIZE	CODE	DWG NO	REV
CHECKED	B			
DRAWN Ophir Auslaender 8/31/2022	SCALE 1:2	WEIGHT	SHEET 1/1	