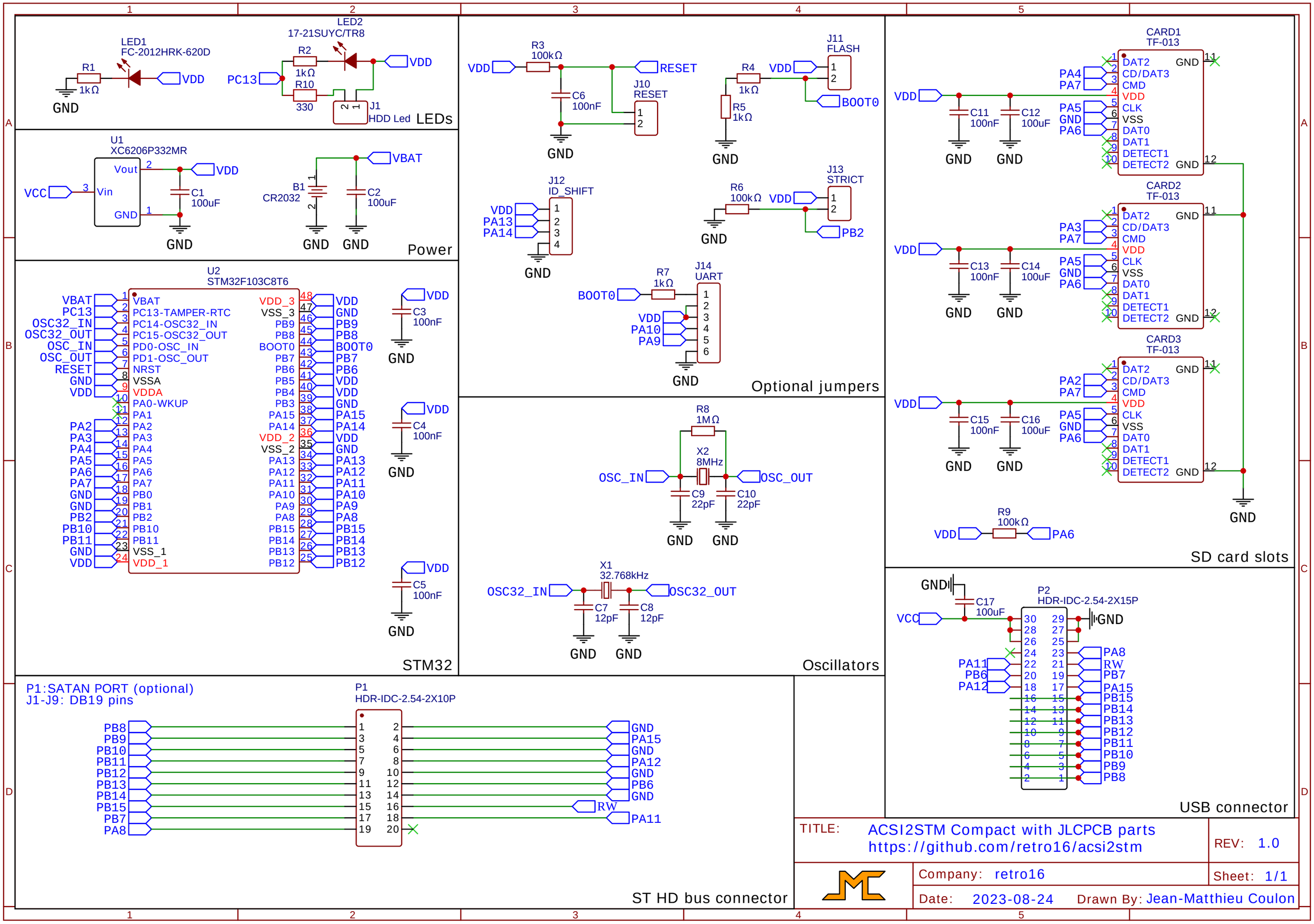
LED1
FC-2012HRK-620D
R1
1kΩ
GND
VDD
LED2
17-21SUYC/TR8
R2
1kΩ
R10
330
PC13
J1
HDD Led
LEDs
U1
XC6206P332MR
Vout
Vin
GND
VCC
C1
100uF
VBAT
B1
CR2032
C2
100uF
Power
U2
STM32F103C8T6
VBAT
PC13-TAMPER-RTC
PC14-OSC32_IN
PC15-OSC32_OUT
PD0-OSC_IN
PD1-OSC_OUT
NRST
VSSA
VDDA
PA0-WKUP
PA1
PA2
PA3
PA4
PA5
PA6
PA7
PB0
PB1
PB2
PB10
PB11
VSS_1
VDD_1
VDD_3
VSS_3
PB9
PB8
BOOT0
PB7
PB6
PB5
PB4
PB3
PA15
PA14
VDD_2
VSS_2
PA13
PA12
PA11
PA10
PA9
PA8
PB15
PB14
PB13
PB12
C3
100nF
C4
100nF
C5
100nF
STM32
R3
100kΩ
C6
100nF
J10
RESET
J11
FLASH
R4
1kΩ
R5
1kΩ
BOOT0
J12
ID_SHIFT
PA13
PA14
J13
STRICT
R6
100kΩ
PB2
R7
1kΩ
J14
UART
PA10
PA9
Optional jumpers
R8
1MΩ
X2
8MHz
OSC_IN
OSC_OUT
C9
22pF
C10
22pF
X1
32.768kHz
OSC32_IN
OSC32_OUT
C7
12pF
C8
12pF
Oscillators
CARD1
TF-013
DAT2
CD/DAT3
CMD
CLK
VSS
DAT0
DAT1
DETECT1
DETECT2
C11
100nF
C12
100uF
CARD2
TF-013
C13
100nF
C14
100uF
CARD3
TF-013
C15
100nF
C16
100uF
R9
100kΩ
SD card slots
P2
HDR-IDC-2.54-2X15P
C17
100uF
USB connector
P1:SATAN PORT (optional)
J1-J9: DB19 pins
P1
HDR-IDC-2.54-2X10P
ST HD bus connector
TITLE:
ACSI2STM Compact with JLCPCB parts
https://github.com/retro16/acsi2stm
REV: 1.0
Company: retro16
Sheet: 1/1
Date: 2023-08-24
Drawn By: Jean-Matthieu Coulon