# Course Reflection: Computer Organization and Architecture

**Textbook:** *Computer Organization and Architecture: Designing for Performance (11th Edition)* by William Stallings **Student Name:** Gallarde, Joel Theo C. **Date:** December 4, 2025

## Part 1: Overview & Performance

### Chapter 1: Basic Concepts and Computer Evolution

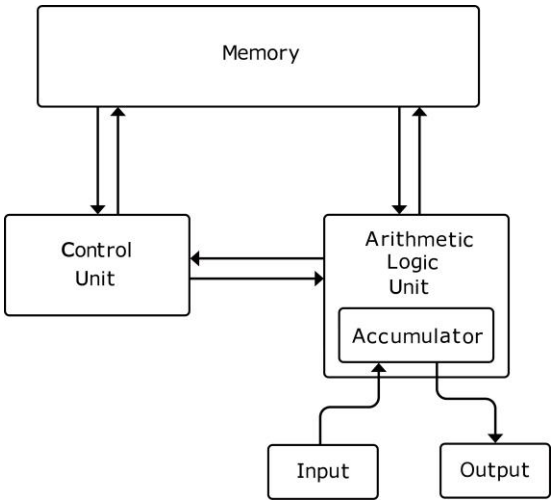


**Summary:** This chapter establishes the difference between **Computer Architecture** (the attributes visible to a programmer, like the instruction set) and **Computer Organization** (the operational hardware units). We explored the history of computing, starting with the **von Neumann architecture**, which introduced the critical concept of storing instructions in memory alongside data. We also discussed **Moore's Law**, noting the historical trend of doubling transistor density and the modern shift away from pure clock-speed increases toward multicore designs.

### Chapter 2: Performance Concepts

**Summary:** We learned that measuring computer "speed" is complex. This chapter covered **Amdahl's Law**, which helps calculate the potential speedup of a system when only a fraction of the task can be parallelized. We also examined the **SPEC benchmark** suite, which provides a standard for comparing the performance of different hardware using real-world applications, and **Little's Law** regarding queuing theory in system buffers.

# Course Reflection: Computer Organization and Architecture

**Textbook:** *Computer Organization and Architecture: Designing for Performance (11th Edition)* by William Stallings **Student Name:** Gallarde, Joel Theo C. **Date:** December 4, 2025

## Part 2: The Computer System

## Chapter 3: A Top-Level View of Computer Function and Interconnection

**Summary:** This chapter outlines the basic interaction between the CPU, Memory, and I/O. The core concept is the **Instruction Cycle**, which consists of Fetch, Execute, and Interrupt stages. We also looked at how these components connect, tracing the evolution from shared **Bus Systems** to faster, point-to-point interconnects like **PCI Express (PCIe)** and **QPI**.

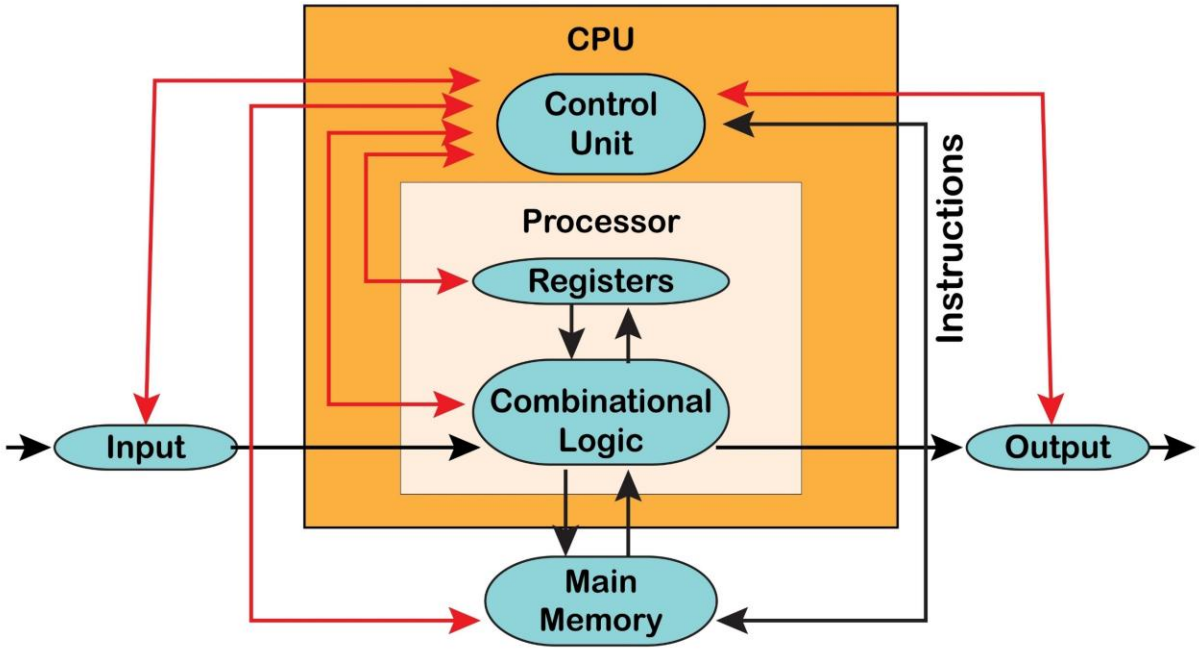

# Course Reflection: Computer Organization and Architecture

**Textbook:** *Computer Organization and Architecture: Designing for Performance (11th Edition)* by William Stallings **Student Name:** Gallarde, Joel Theo C. **Date:** December 4, 2025

## Chapter 4: The Memory Hierarchy: Locality and Performance

**Summary:** The key takeaway here is the **Principle of Locality** (Temporal and Spatial). Because programs tend to access the same or nearby data repeatedly, we can use a hierarchy of memory types. This structure places small, fast, expensive memory (SRAM/Cache) at the top and large, slow, cheap storage (HDD) at the bottom to optimize performance and cost.

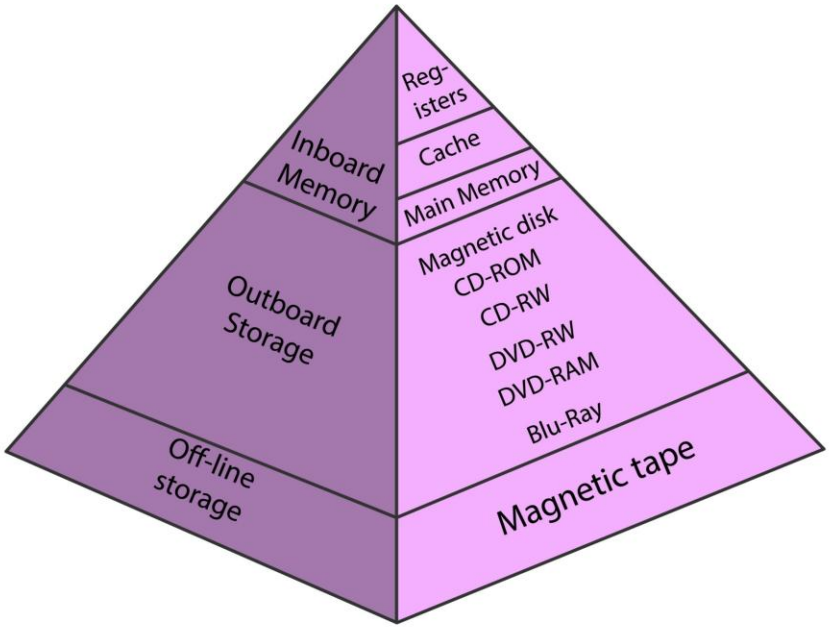

# Course Reflection: Computer Organization and Architecture

**Textbook:** *Computer Organization and Architecture: Designing for Performance (11th Edition)* by William Stallings **Student Name:** Gallarde, Joel Theo C. **Date:** December 4, 2025

## Chapter 5: Cache Memory

**Summary:** Cache memory is designed to bridge the speed mismatch between the fast CPU and slower RAM. We studied how data is organized using **Mapping Functions** (Direct, Fully Associative, and Set Associative). We also discussed **Replacement Algorithms** like LRU (Least Recently Used), which determines which data is removed when the cache fills up.

## Chapter 6: Internal Memory

**Summary:** This chapter focuses on main memory technologies. We differentiated between **SRAM** (Static RAM), which is fast but volatile and used for cache, and **DRAM** (Dynamic RAM), which is denser but requires refreshing. We also covered **Error Correction Codes (ECC)** for data integrity and the evolution of DDR (Double Data Rate) SDRAM.

# Course Reflection: Computer Organization and Architecture

**Textbook:** *Computer Organization and Architecture: Designing for Performance (11th Edition)* by William Stallings **Student Name:** Gallarde, Joel Theo C. **Date:** December 4, 2025

## Chapter 7: External Memory

**Summary:** We examined secondary storage devices. For magnetic disks (HDDs), we analyzed performance metrics like seek time and rotational latency. We also covered **RAID (Redundant Array of Independent Disks)**, discussing how data stripping (RAID 0) improves speed while mirroring (RAID 1) provides redundancy. Finally, we looked at **SSDs**, which use flash memory for significantly faster access than mechanical drives.

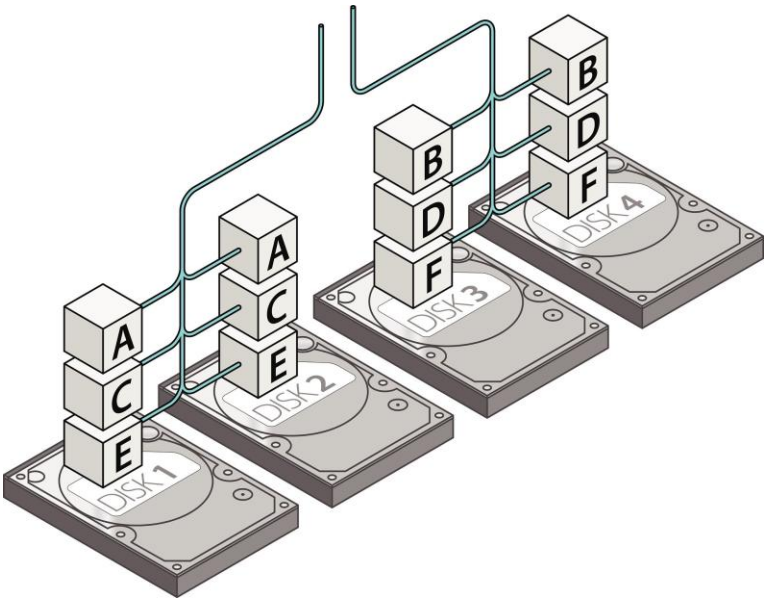


## Chapter 8: Input/Output

**Summary:** This chapter detailed the three methods the CPU uses to manage I/O devices:

1. **Programmed I/O:** The CPU waits for the device (inefficient).
2. **Interrupt-Driven I/O:** The device signals the CPU when ready.
3. **Direct Memory Access (DMA):** A specialized module transfers data directly to memory without burdening the CPU, which is essential for high-performance systems.

# Course Reflection: Computer Organization and Architecture

**Textbook:** *Computer Organization and Architecture: Designing for Performance (11th Edition)* by William Stallings **Student Name:** Gallarde, Joel Theo C. **Date:** December 4, 2025

## Chapter 9: Operating System Support

**Summary:** We discussed the hardware features required to support an OS, specifically **Scheduling** and **Memory Management**. The most important concept was **Virtual Memory**, which uses Paging and Segmentation to allow programs to address more memory than is physically installed by swapping pages to the disk.

---

## Part 3: Instruction Sets & Assembly

*(Chapters 10, 11, and 12 were skipped)*

## Chapter 13: Instruction Sets: Characteristics and Functions

**Summary:** This chapter viewed the architecture from the programmer's perspective. We analyzed machine instructions, consisting of an **Opcode** (operation) and **Operands** (data). We categorized instructions (Data Processing, Storage, Control) and discussed **Endianness** (Big-Endian vs. Little-Endian), which dictates the byte order of multi-byte data in memory.

# Course Reflection: Computer Organization and Architecture

**Textbook:** *Computer Organization and Architecture: Designing for Performance (11th Edition)* by William Stallings **Student Name:** Gallarde, Joel Theo C. **Date:** December 4, 2025

## Chapter 14: Instruction Sets: Addressing Modes and Formats

**Summary:** We explored how the CPU calculates the address of data. Common **Addressing Modes** include Immediate (data in instruction), Direct, Indirect (pointer), and Register addressing. We also compared instruction formats, noting that **RISC** architectures usually use simple, fixed-length instructions, while **CISC**

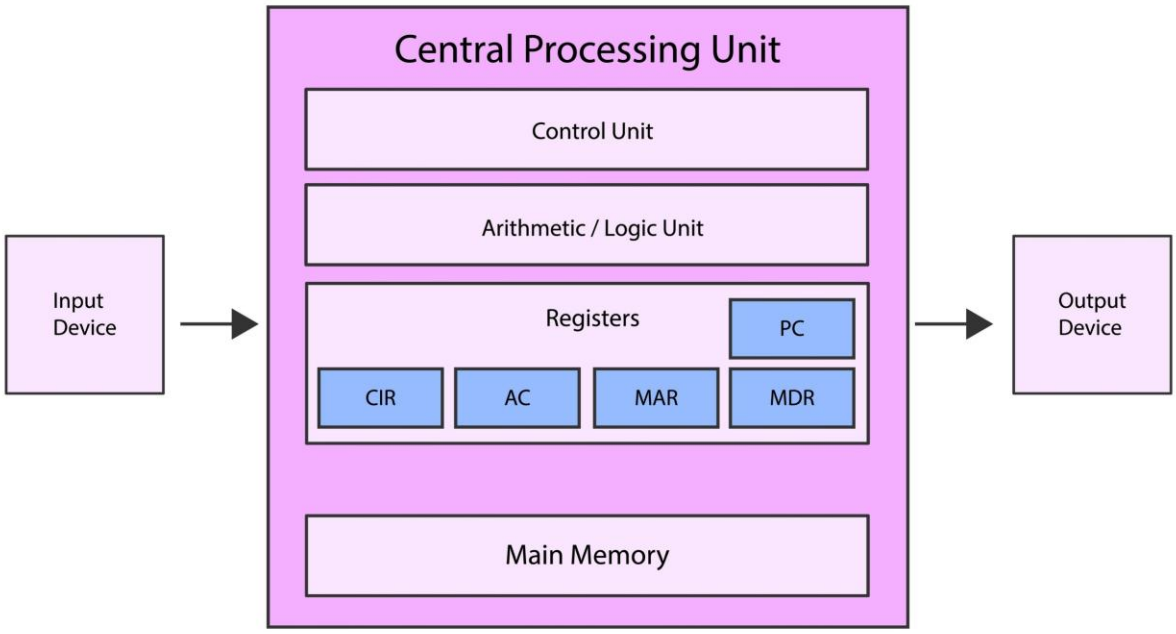


architectures use variable-length instructions.

## Chapter 15: Assembly Language and Related Topics

**Summary:** The final chapter covered **Assembly Language**, the symbolic representation of machine code. We learned the workflow of compiling code: the **Assembler** translates mnemonics to object code, the **Linker** combines object files into an executable, and the **Loader** places it into memory for execution.