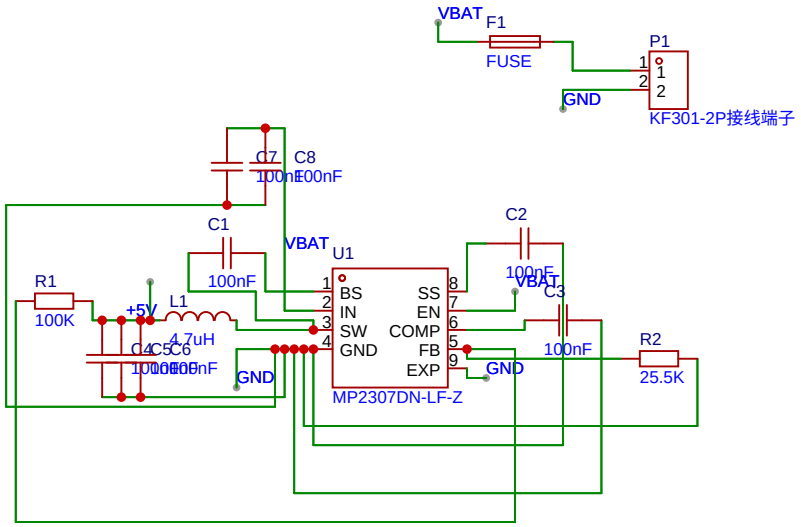

Schematic	Schematic1	Create at	2026-05-17
		Update at	2026-05-17
Board	Board1	Page	POWER_BLK
Drawn		JulyMonitor_uHAT	
Reviewed			
		Version	Size	Page 1 Total 3
EasyEDA		V1.0	A4	EasyEDA.com

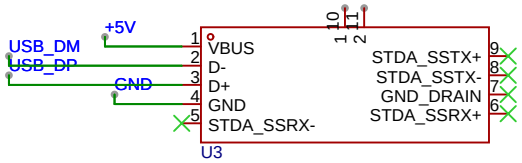

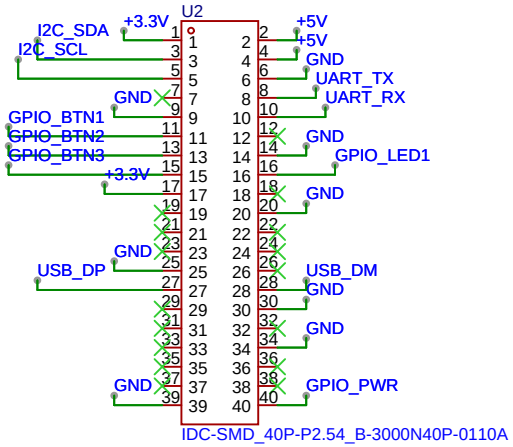

Schematic	Schematic1	Create at	2026-05-17
		Update at	2026-05-24
Board	Board1	Page	GPIO header + USB-A
Drawn		JulyMonitor_uHAT	
Reviewed			
		Version	Size	Page 2 Total 3
EasyEDA		V1.0	A4	EasyEDA.com

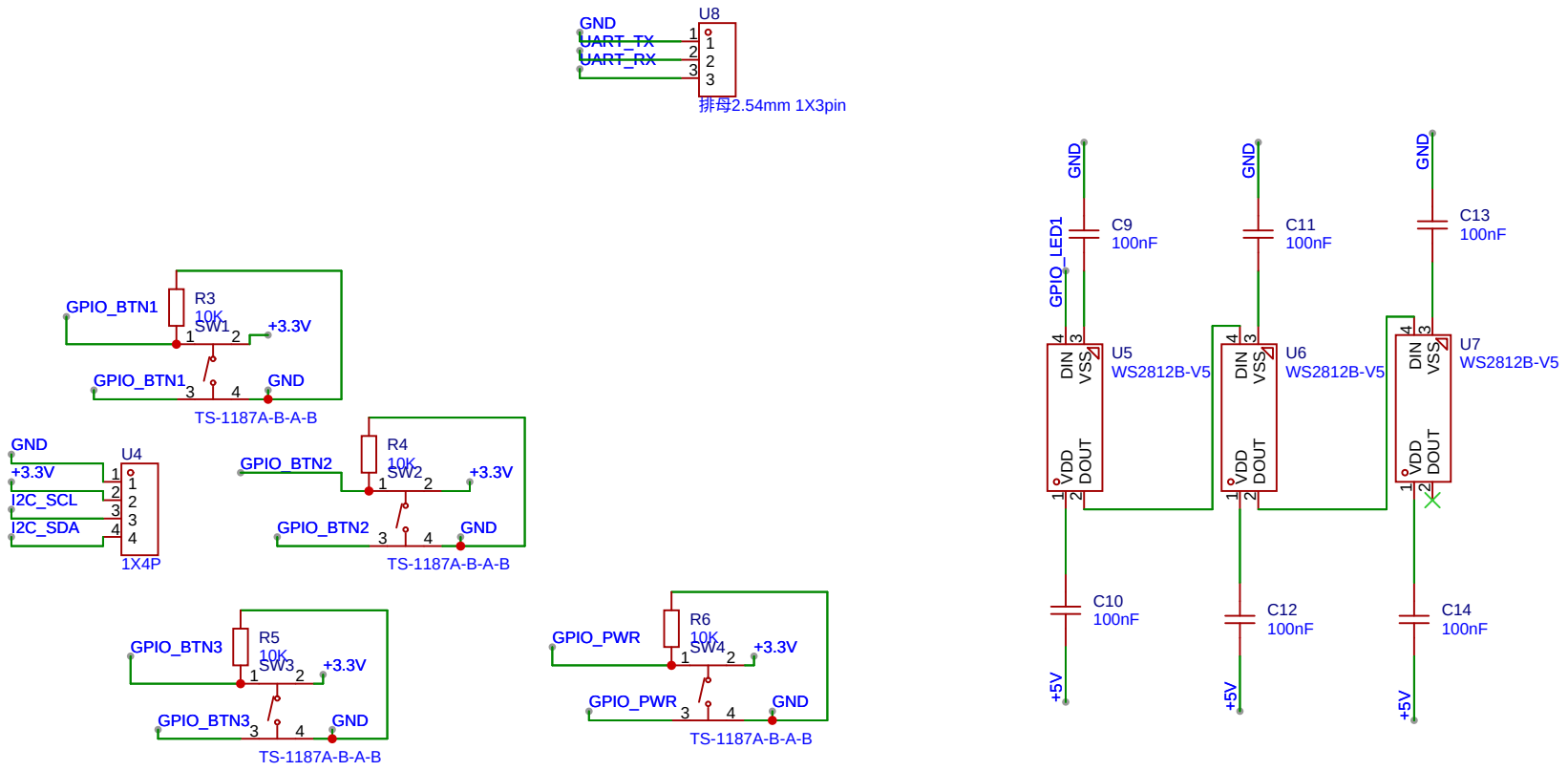

Schematic	Schematic1	Create at	2026-05-17
		Update at	2026-05-24
Board	Board1	Page	LEDS AND OLED DISP
Drawn		JulyMonitor_uHAT	
Reviewed			
		Version	Size	Page 3 Total 3
EasyEDA		V1.0	A4	EasyEDA.com