RockRTK Board Block Diagram

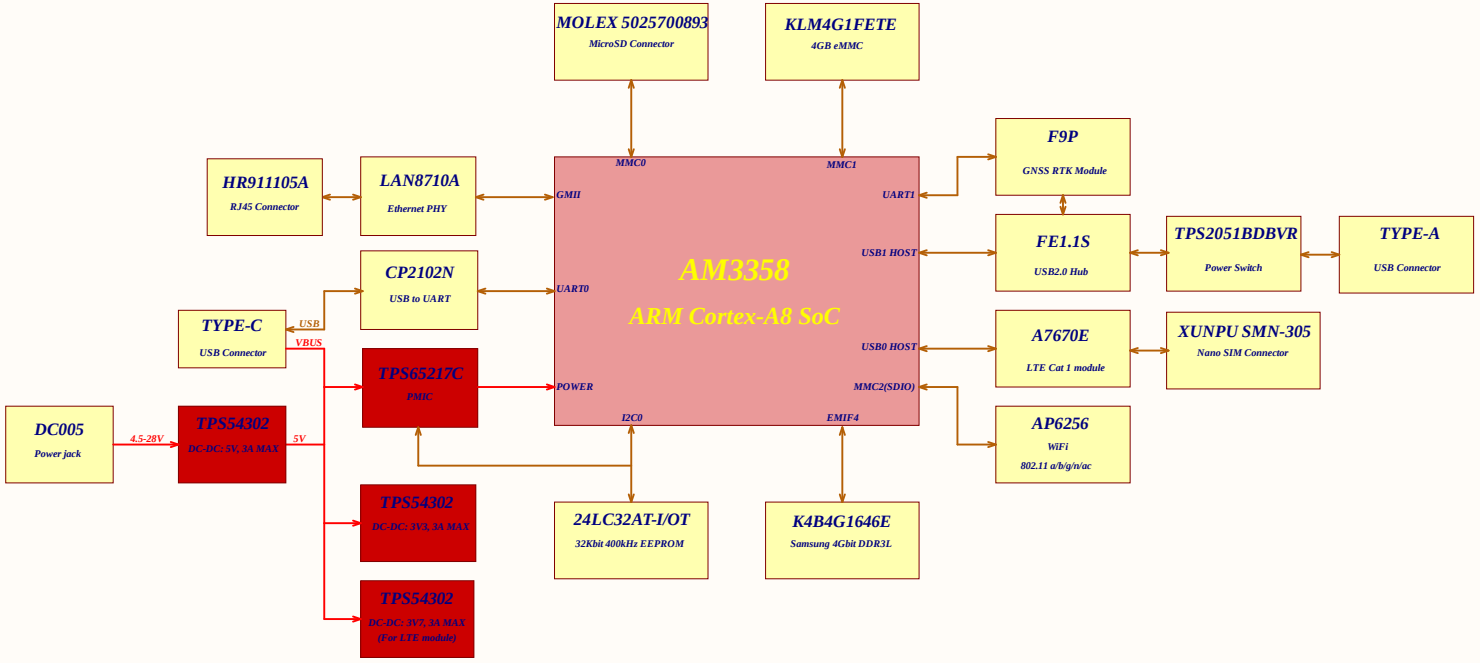

Title		
Size A4	Number	Revision
Date: 8.25.2025		Sheet of
File: C:\Users\..\BlockDiagram.SchDoc		Drawn By:

Main Page

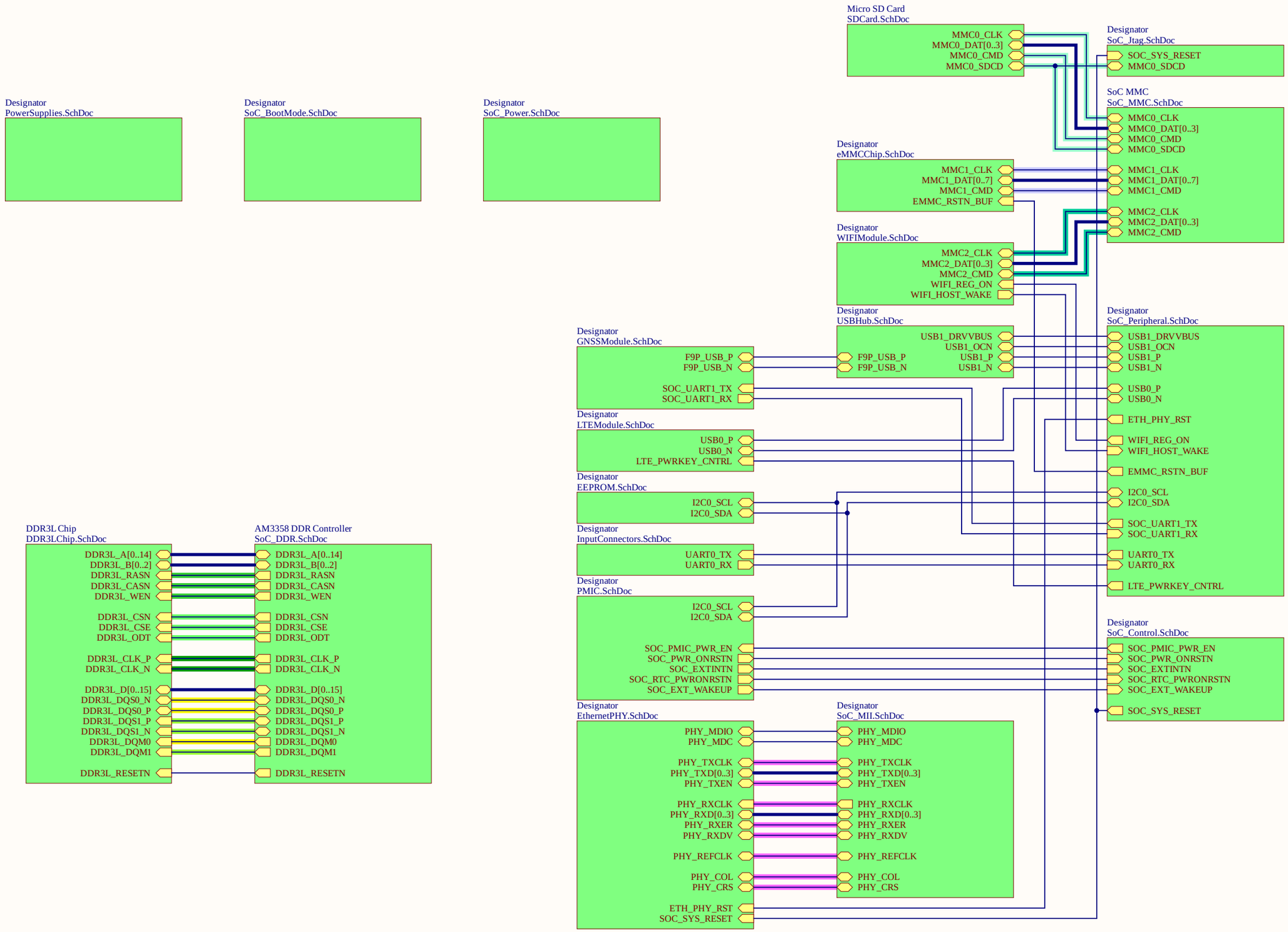

Title		
Size A3	Number	Revision
Date: 8.25.2025		Sheet of
File: C:\Users\..\Main.SchDoc		Drawn By:

Input Connectors

Type-C Conenctor and USB-UART Convertor

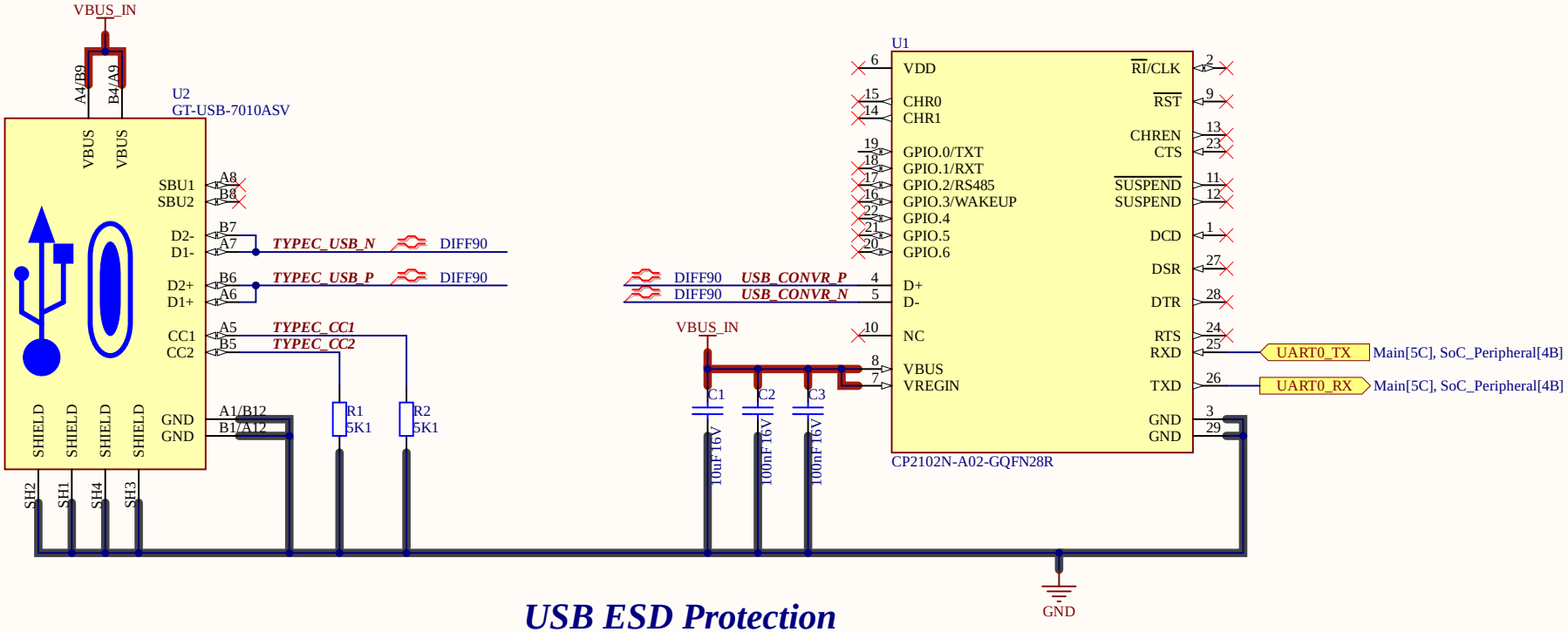

DC005 Power Input

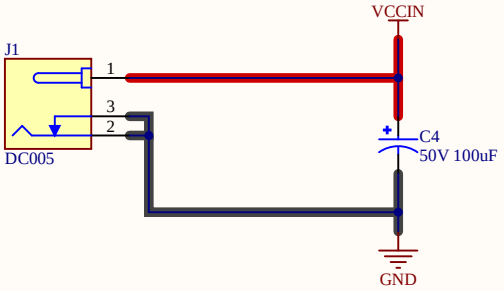

USB ESD Protection

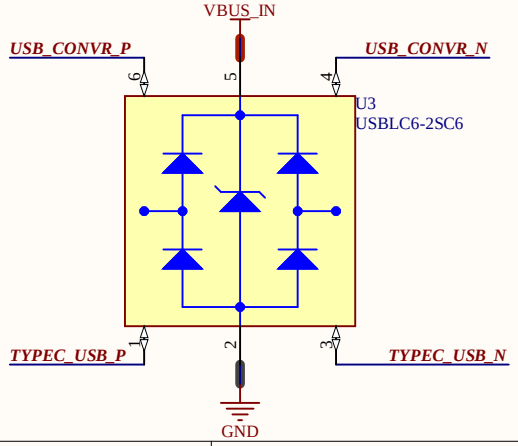

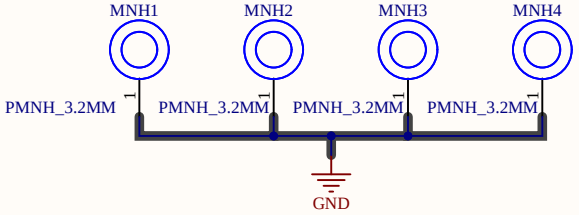

Title		
Size A4	Number	Revision
Date: 8.25.2025		Sheet of
File: C:\Users\..\InputConnectors.SchDoc		Drawn By:

Power Management IC Circuit

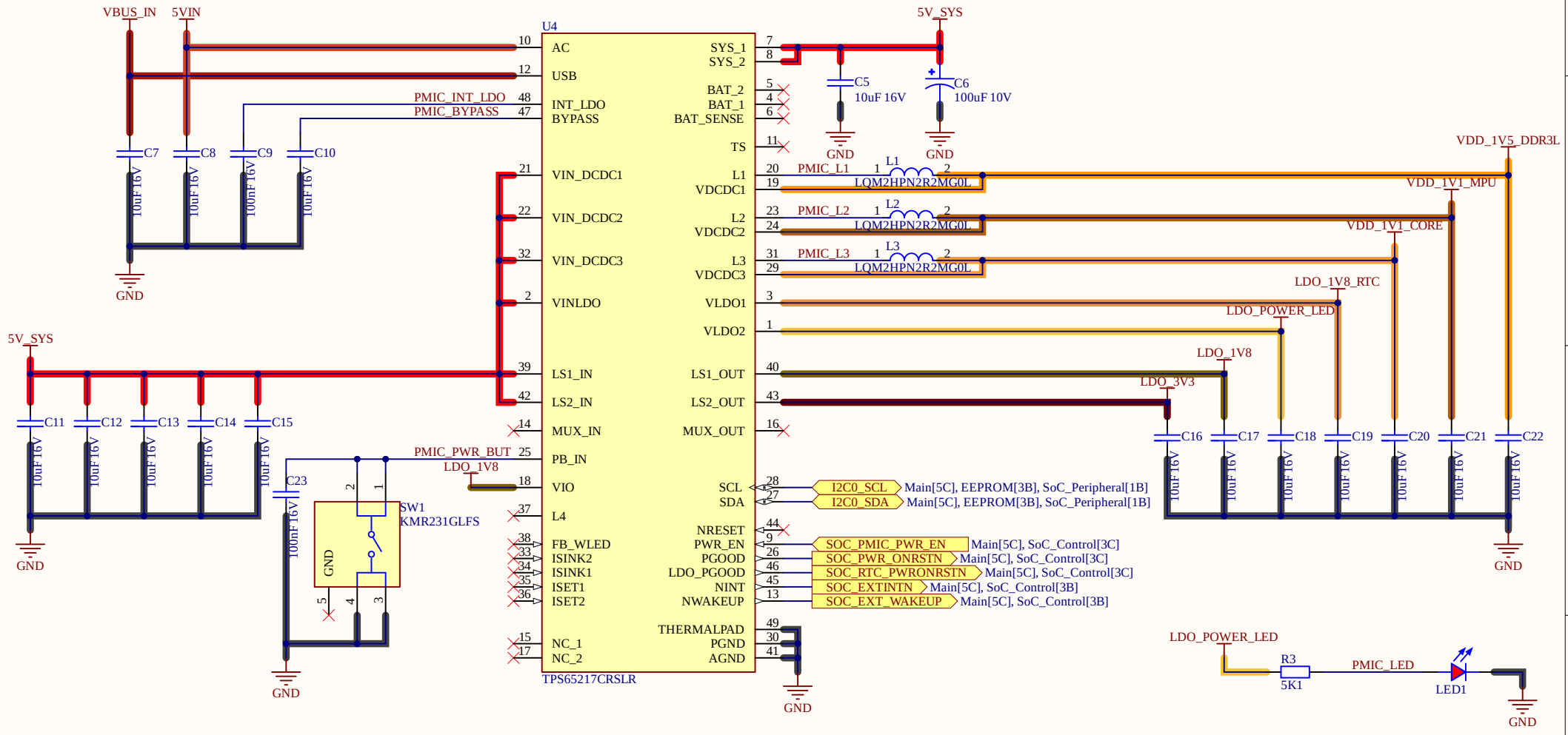

Title		
Size A4	Number	Revision
Date: 8.25.2025		Sheet of
File: C:\Users\..\PMIC.SchDoc		Drawn By:

Input DC-DC Converter

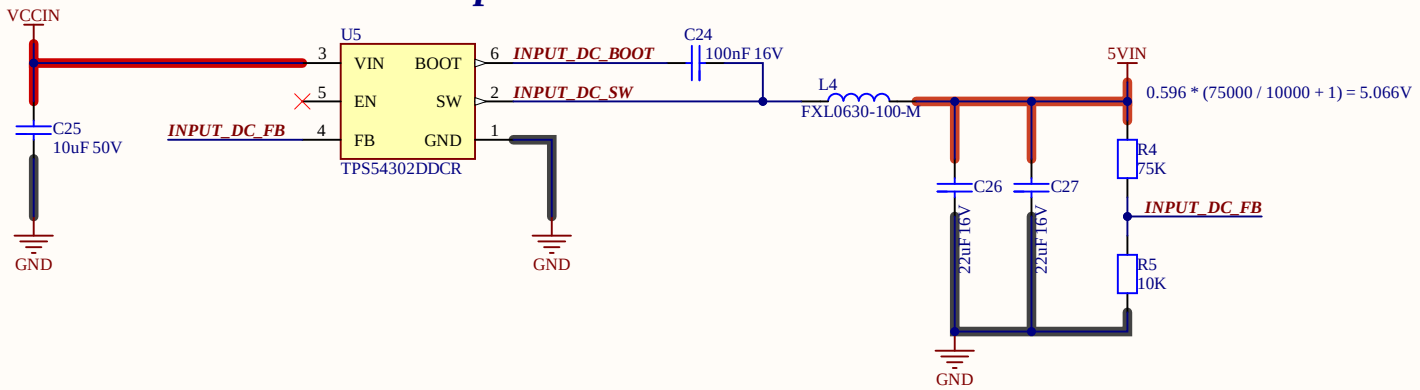

3.3V DC-DC Converter

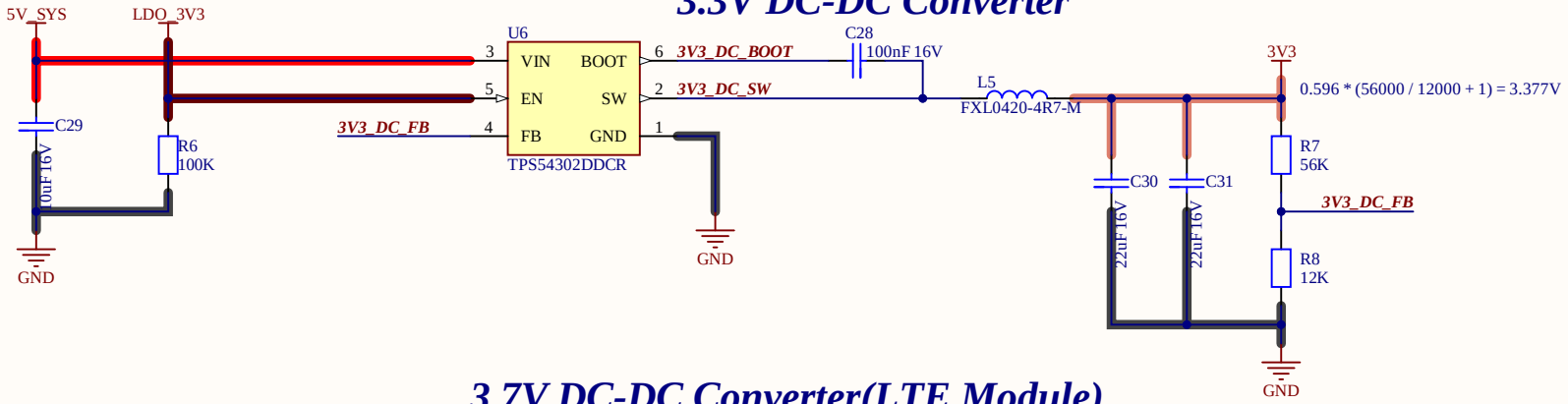

3.7V DC-DC Converter(LTE Module)

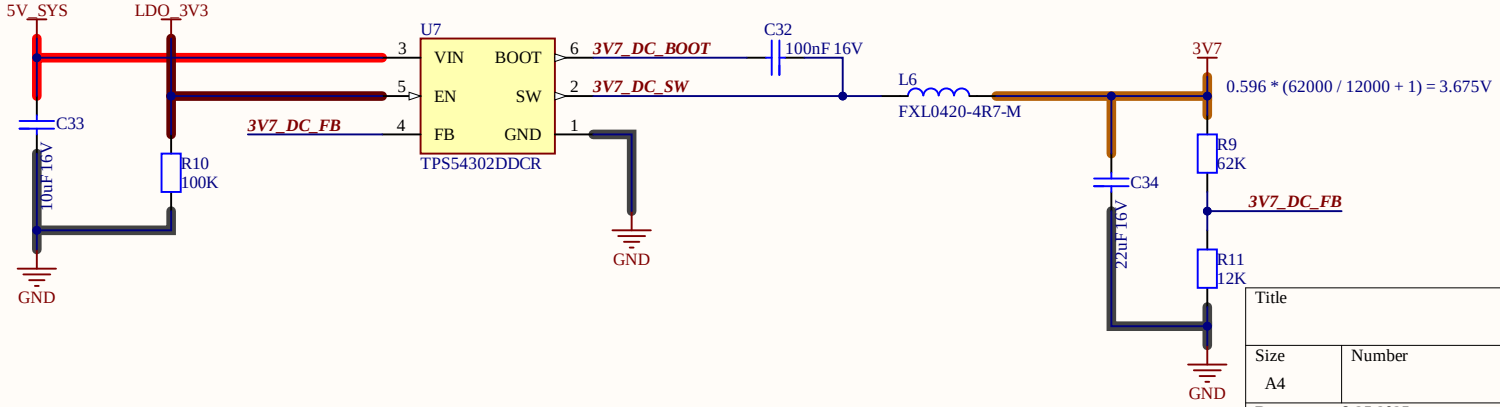

Title		
Size A4	Number	Revision
Date: 8.25.2025		Sheet of
File: C:\Users\..\PowerSupplies.SchDoc		Drawn By:

K4B4G1646E-BYMA DDR3L Chip

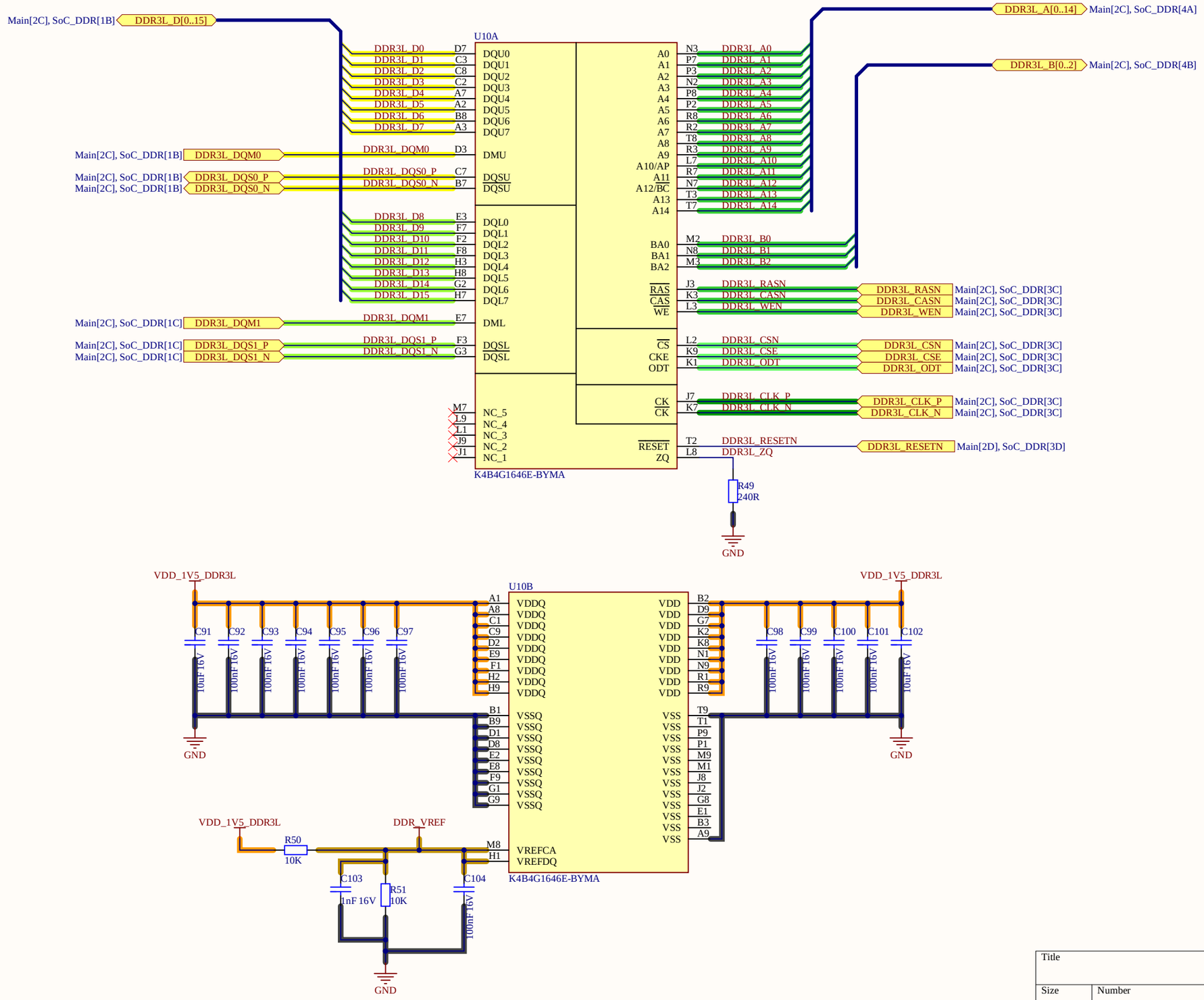

Title		
Size A3	Number	Revision
Date: 8.25.2025		Sheet of
File: C:\Users\..\DDR3LChip.SchDoc		Drawn By:

KLM4G1FETE-B041 eMMC Chip

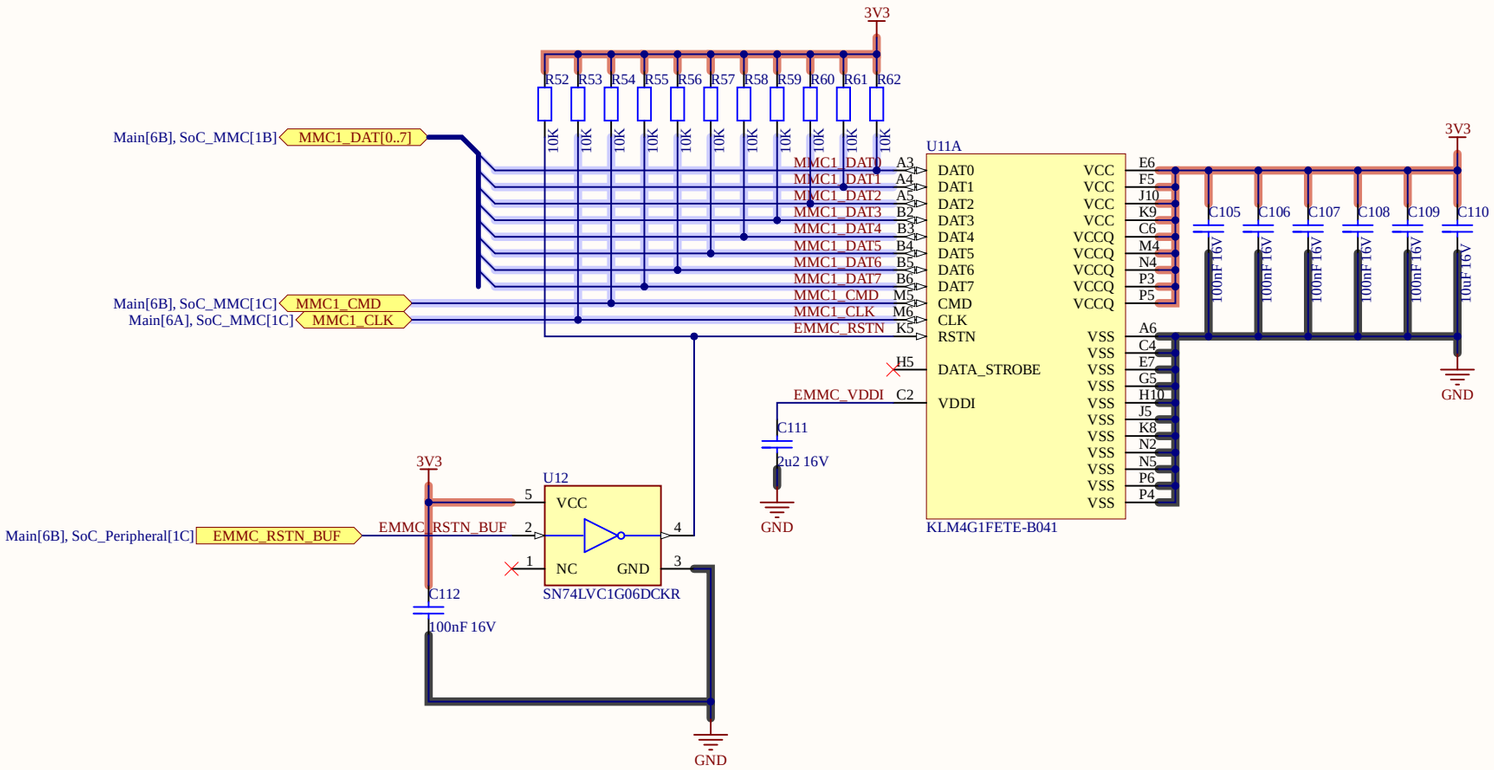

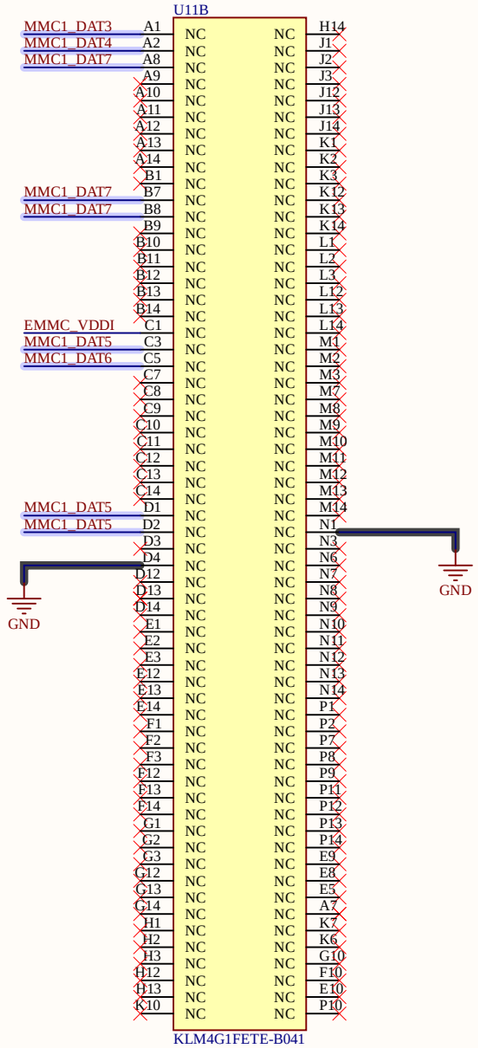

Title		
Size A3	Number	Revision
Date: 8.25.2025		Sheet of
File: C:\Users\..\eMMCChip.SchDoc		Drawn By:

LAN8710A Ethernet Transceiver

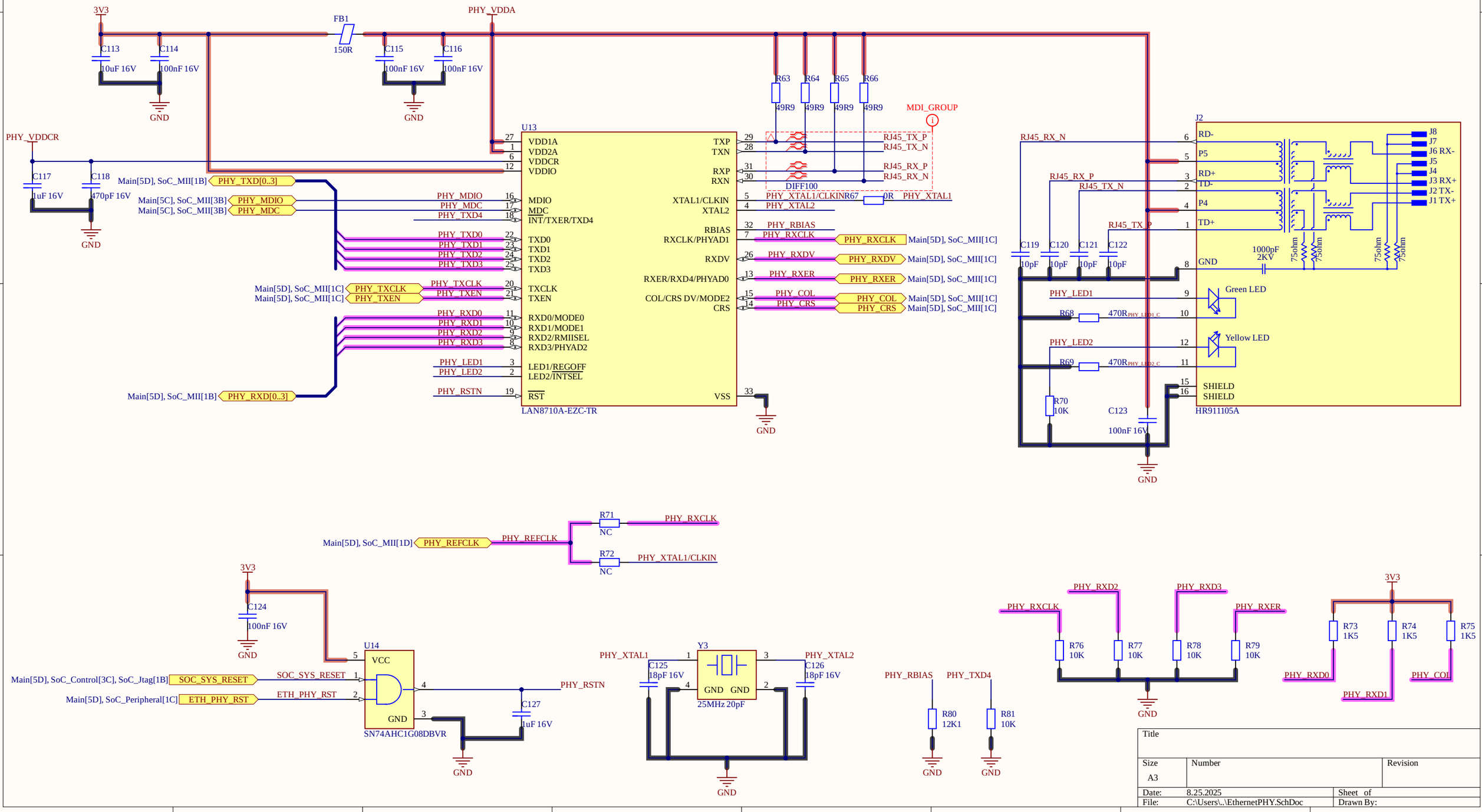

Title		
Size A3	Number	Revision
Date: 8.25.2025	Sheet of	
File: C:\Users\..\EthernetPHY.SchDoc	Drawn By:	

Micro SD Card

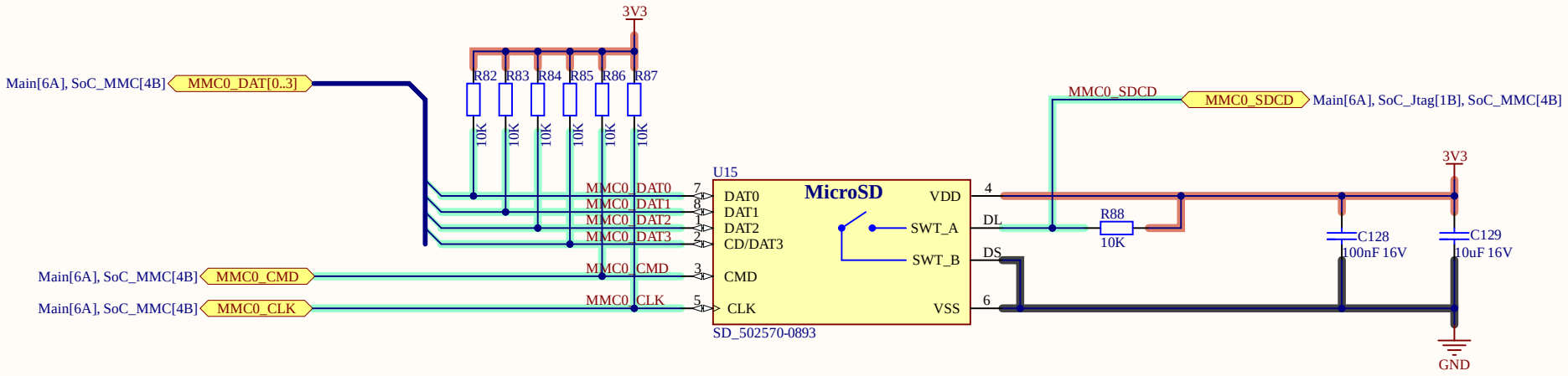

Title		
Size A4	Number	Revision
Date: 8.25.2025		Sheet of
File: C:\Users\..\SDCard.SchDoc		Drawn By:

USB Hub & TYPE-A Connector

USB Hub

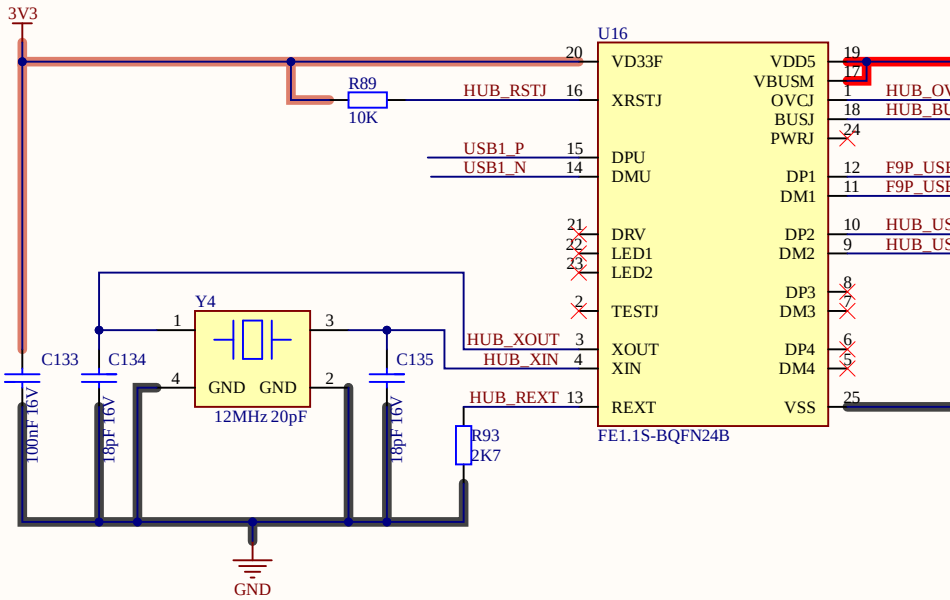

Power-distribution switch

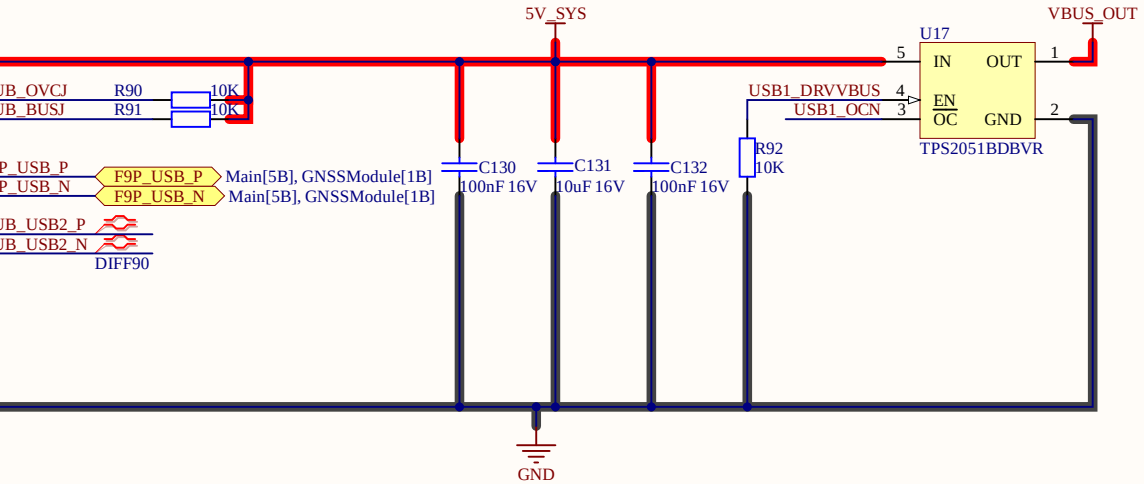

Type-A Connector

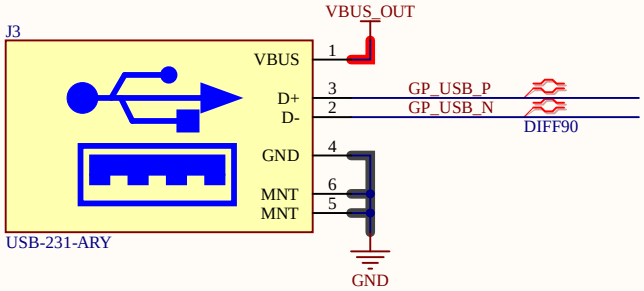

ESD Protection

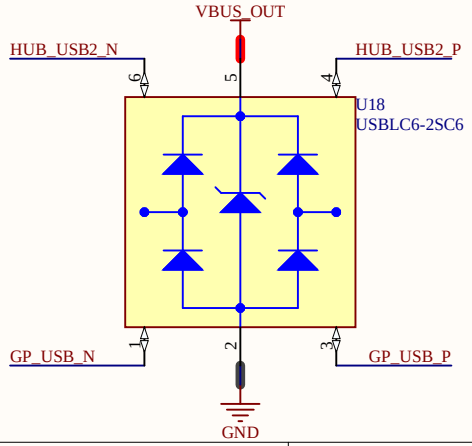

Connections to AM3358

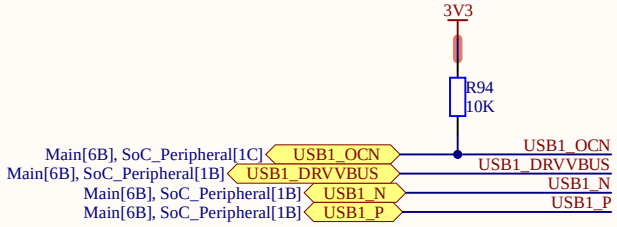

Title		
Size A4	Number	Revision
Date: 8.25.2025		Sheet of
File: C:\Users\..\USBHub.SchDoc		Drawn By:

LTE 4G A7670E Module

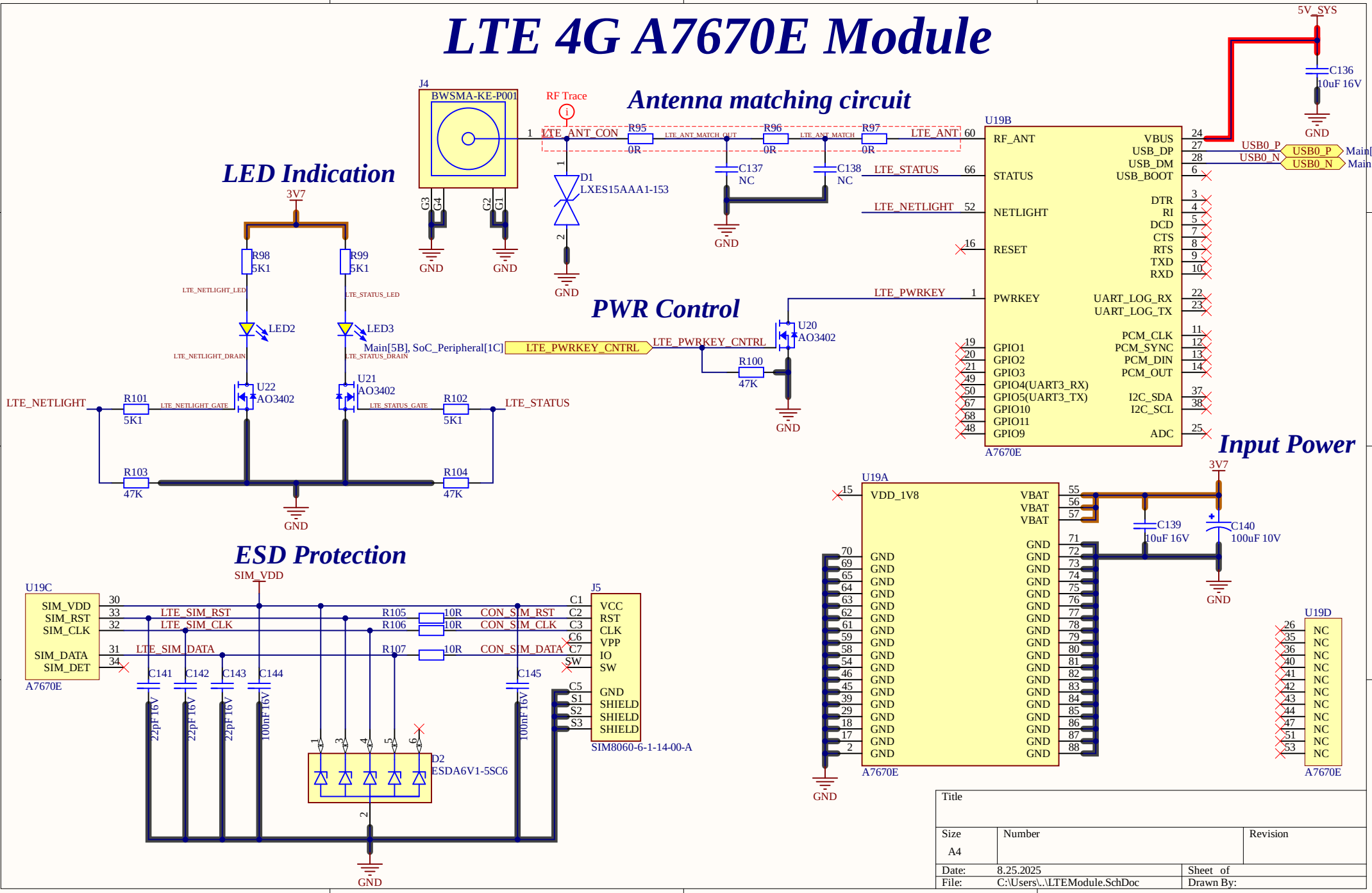

Title		
Size A4	Number	Revision
Date: 8.25.2025	Sheet of	
File: C:\Users\..\LTEModule.SchDoc	Drawn By:	

GNSS NEO-F9P Module

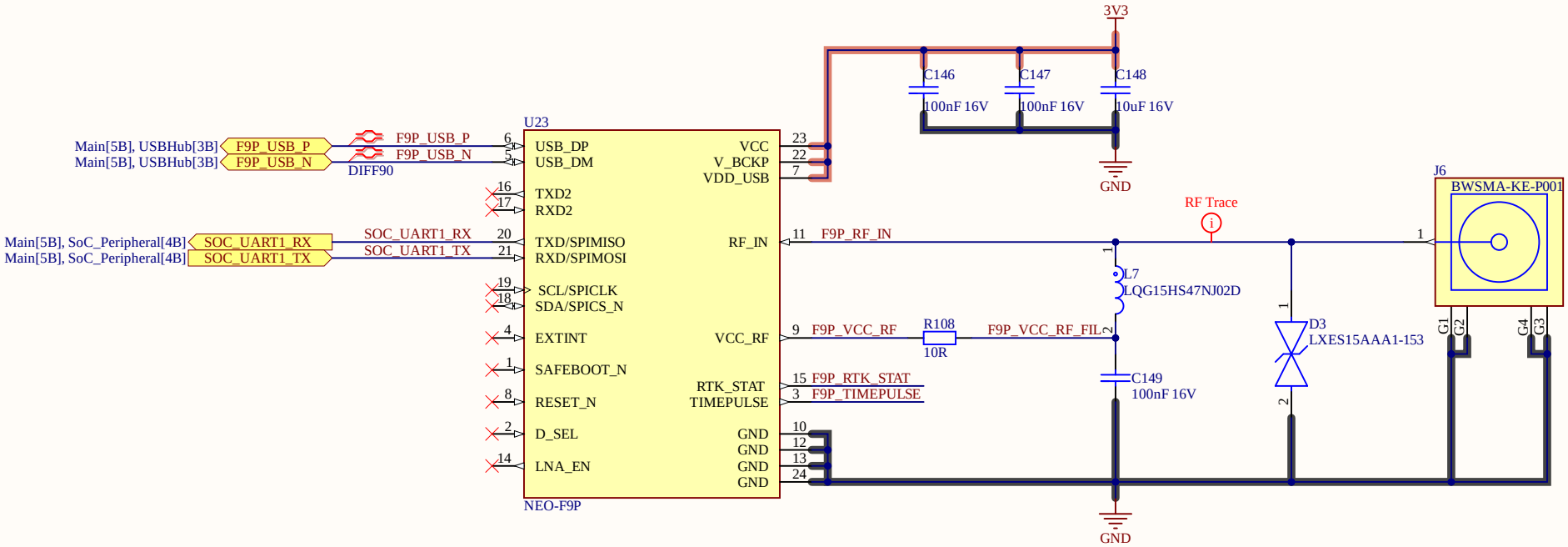

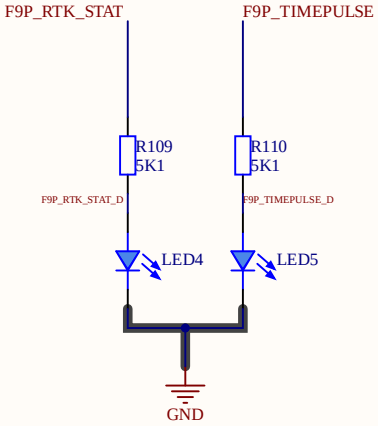

Title		
Size A4	Number	Revision
Date: 8.25.2025		Sheet of
File: C:\Users\..\GNSSModule.SchDoc		Drawn By:

AP6256 WiFi Module

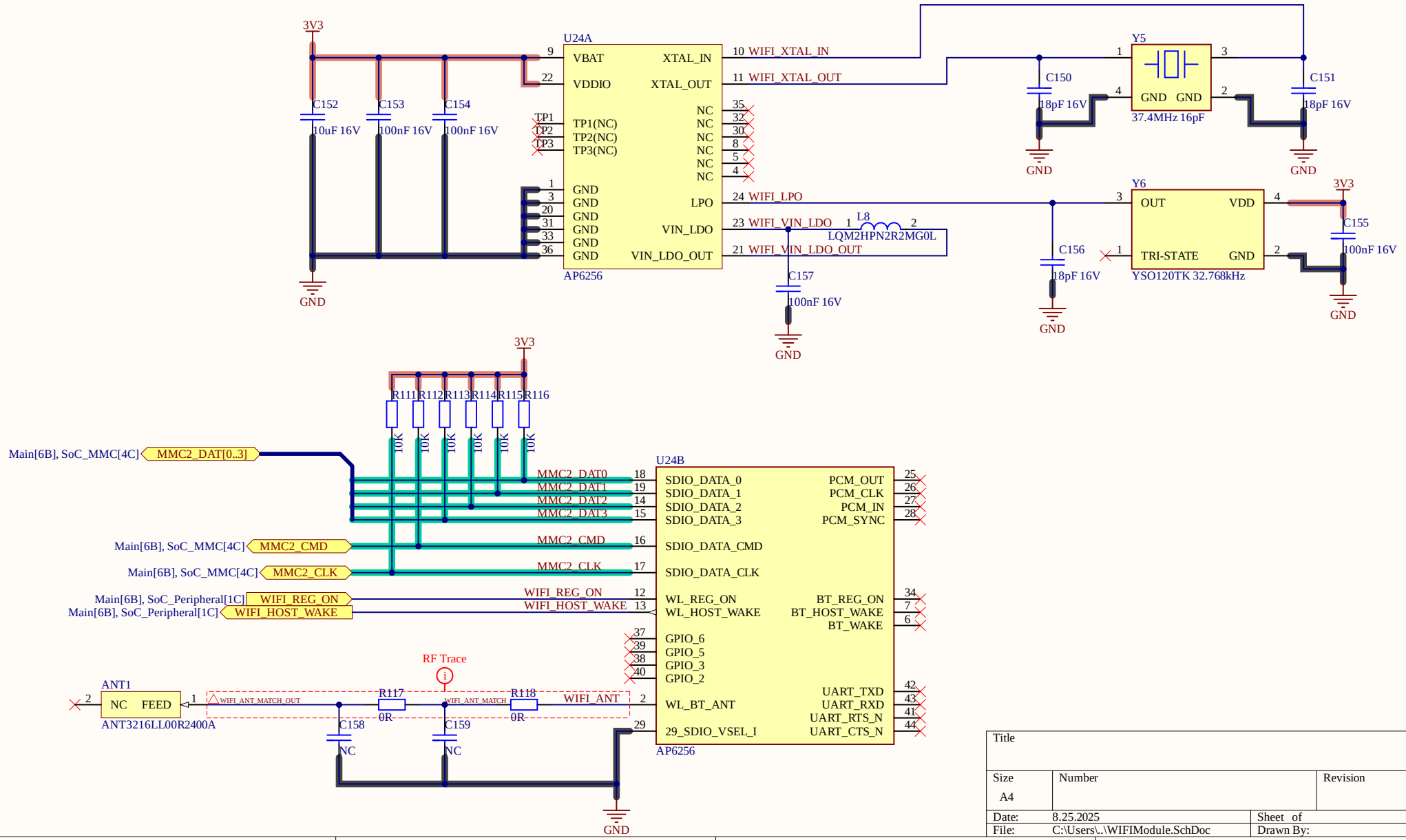

Title		
Size A4	Number	Revision
Date: 8.25.2025		Sheet of
File: C:\Users\..\WIFIModule.SchDoc		Drawn By:

24LC32AT-I/OT EEPROM Chip

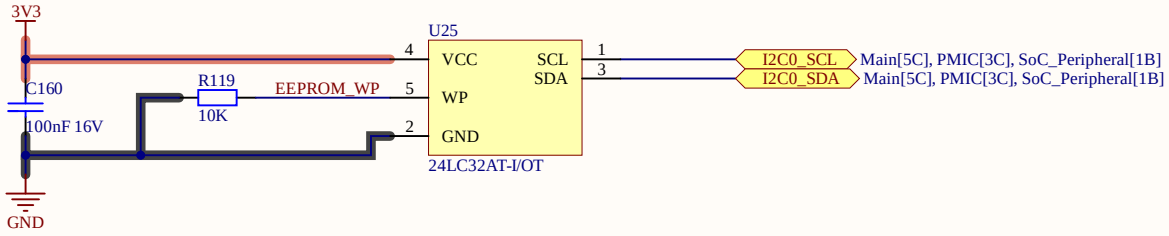

Title		
Size A4	Number	Revision
Date: 8.25.2025		Sheet of
File: C:\Users\..\EEPROM.SchDoc		Drawn By:

AM3358 Power Rails

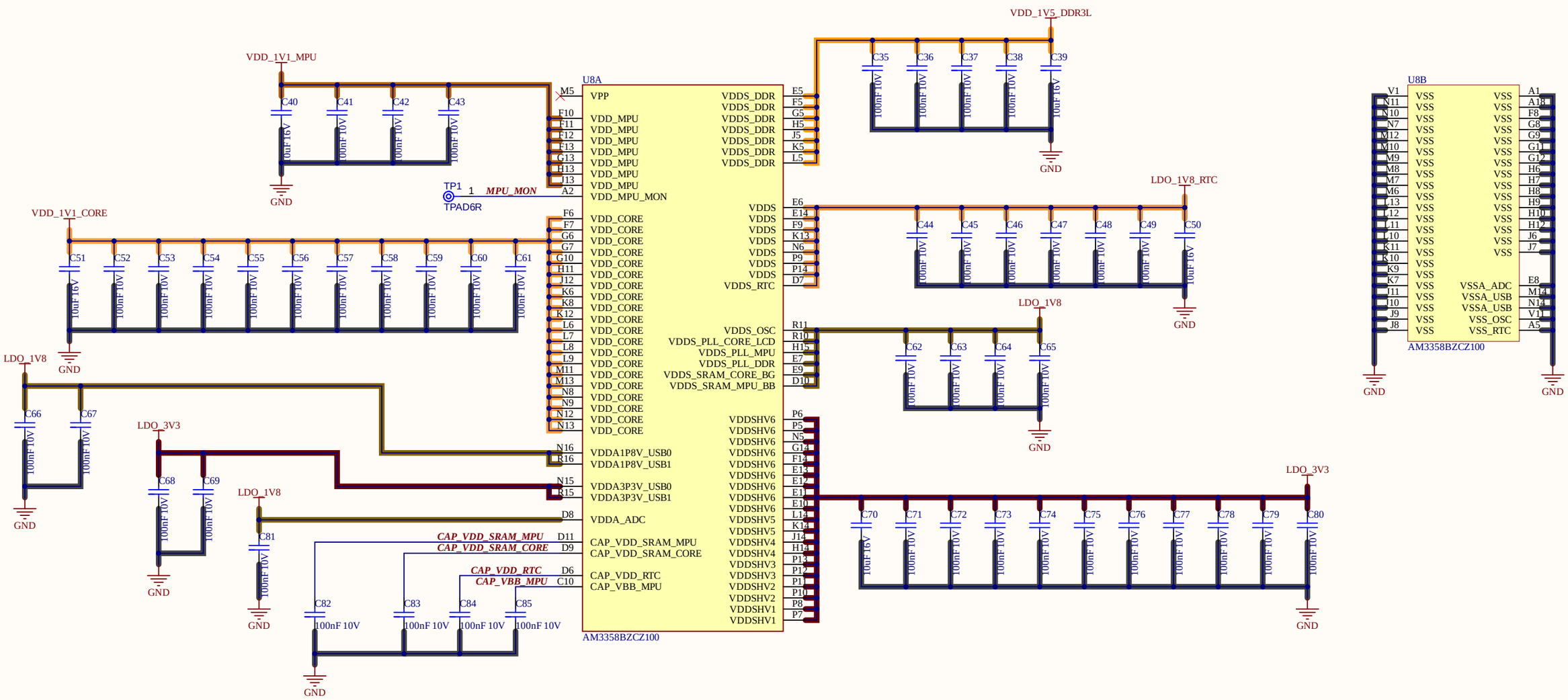

Title		
Size A3	Number	Revision
Date: 8.25.2025		Sheet of
File: C:\Users\..\SoC_Power.SchDoc		Drawn By:

AM3358 Control Signals

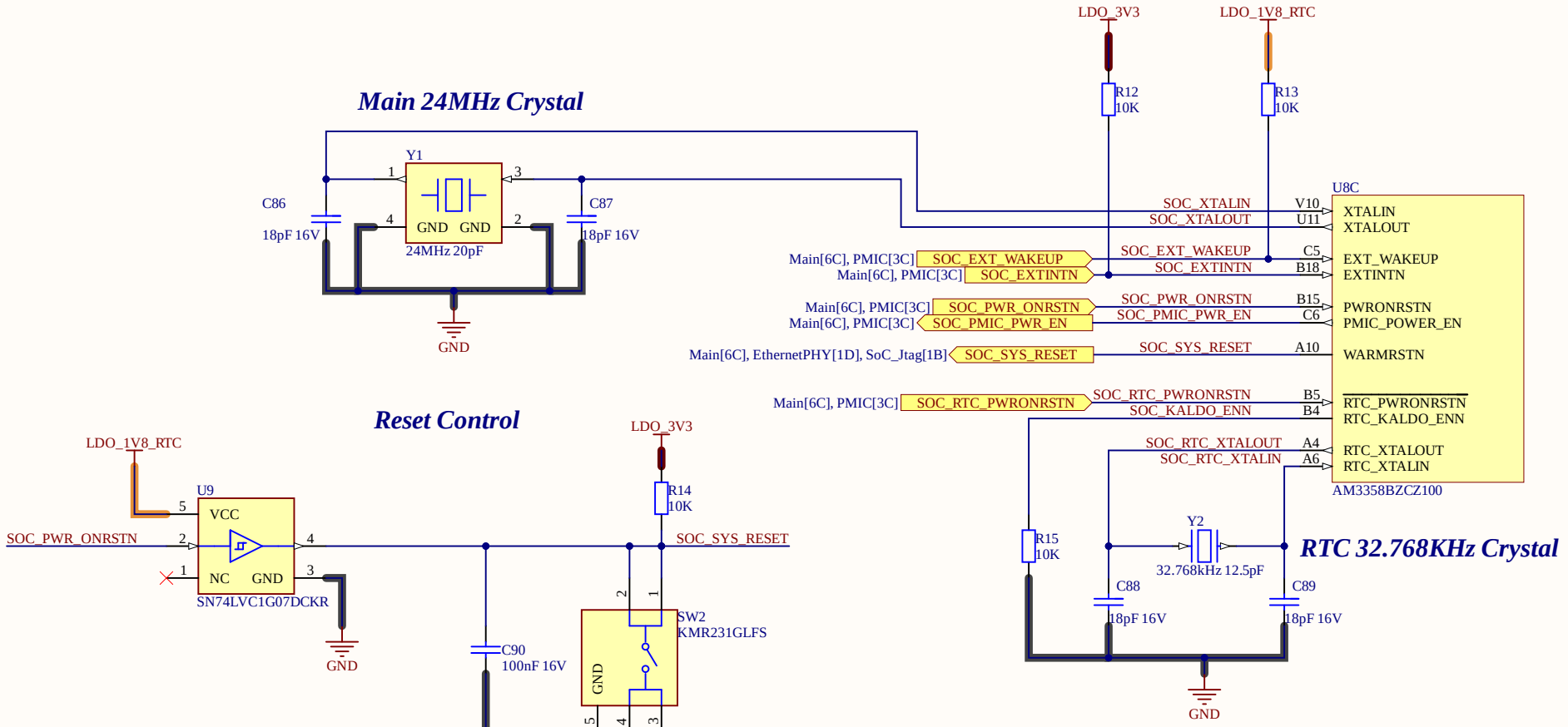

Title		
Size A4	Number	Revision
Date: 8.25.2025		Sheet of
File: C:\Users\..\SoC_Control.SchDoc		Drawn By:

AM3358 Boot Mode Configuration

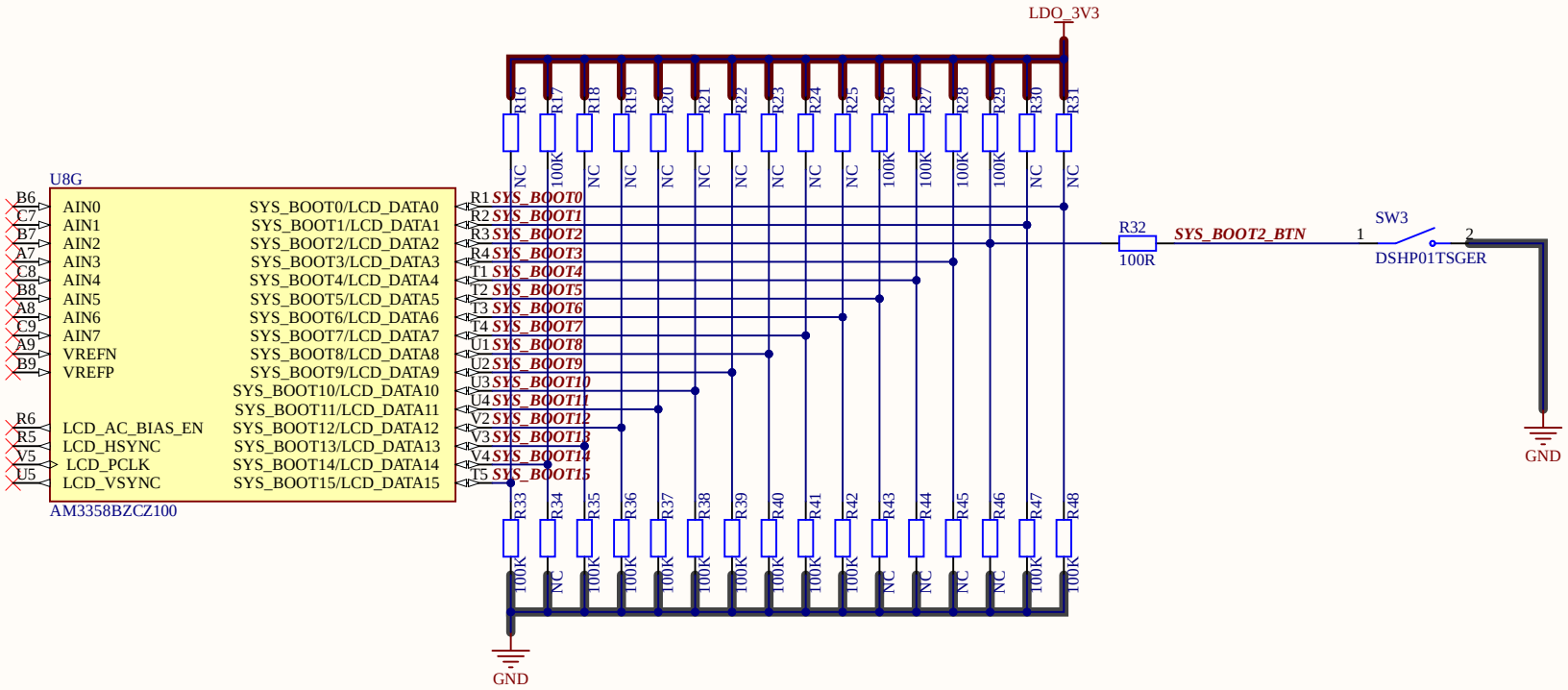

SYSBOOT[15:14]	SYSBOOT[13:12]	SYSBOOT[11:10]	SYSBOOT[9]	SYSBOOT[8]	SYSBOOT[7:6]	SYSBOOT[5]	SYSBOOT[4:0]	Boot Sequence			
00b = 19.2MHz 01b = 24MHz 10b = 25MHz 11b = 26MHz	00b (all other values reserved)	Don't care for ROM code	Don't care for ROM code	Don't care for ROM code	Don't care for ROM code	0 = CLKOUT1 disabled 1 = CLKOUT1 enabled	11100b	MMC1	MMC0	UART0	USB0
00b = 19.2MHz 01b = 24MHz 10b = 25MHz 11b = 26MHz	00b (all other values reserved)	Don't care for ROM code	Don't care for ROM code	Don't care for ROM code	Don't care for ROM code	0 = CLKOUT1 disabled 1 = CLKOUT1 enabled	11000b	SPI0	MMC0	USB0	UART0

Title		
Size A4	Number	Revision
Date: 8.25.2025		Sheet of
File: C:\Users\..\SoC_BootMode.SchDoc		Drawn By:

AM3358 DDR Controller

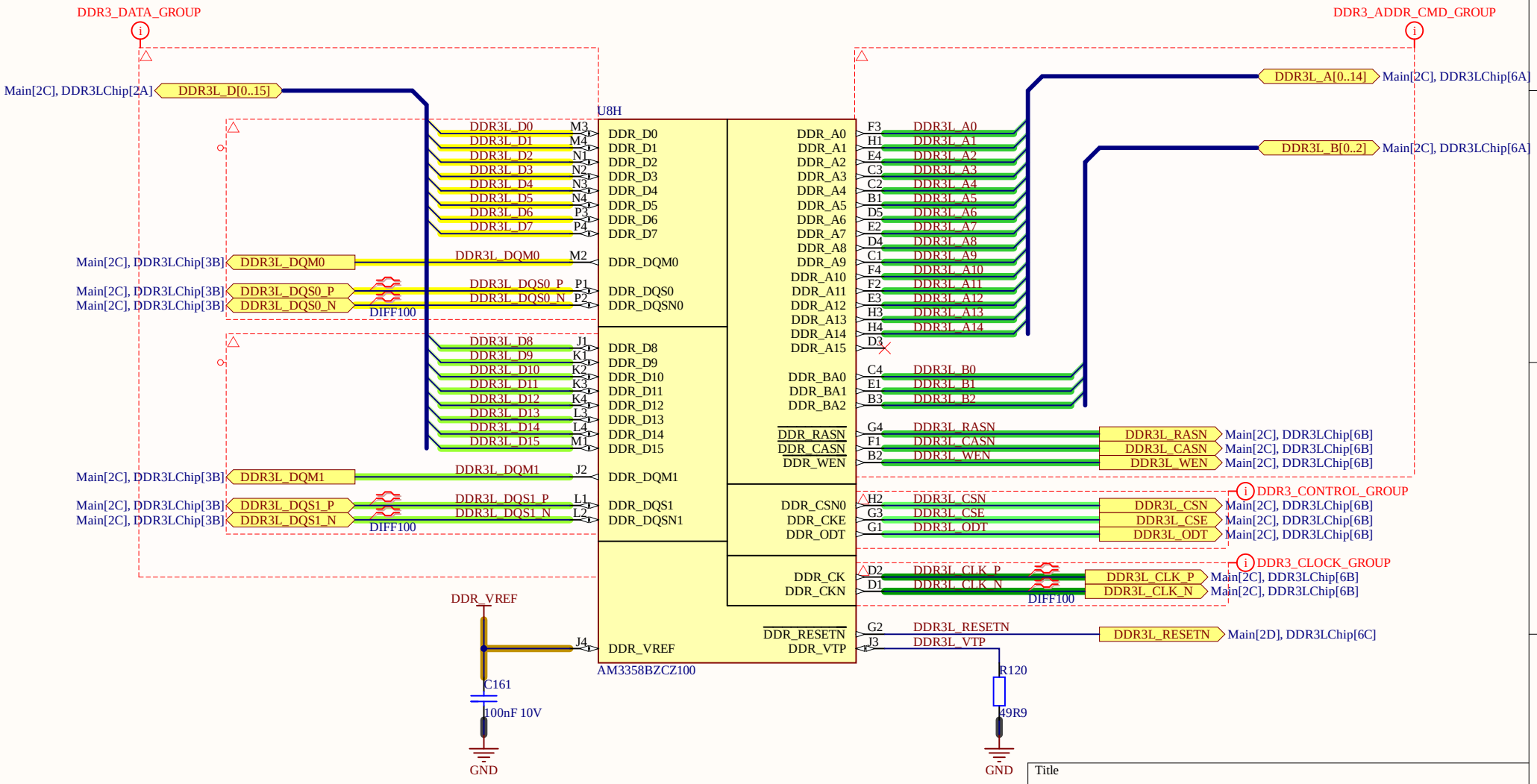

Title		
Size A4	Number	Revision
Date: 8.25.2025	Sheet of	
File: C:\Users\..\SoC_DDR.SchDoc	Drawn By:	

AM3358 Multimedia card interface

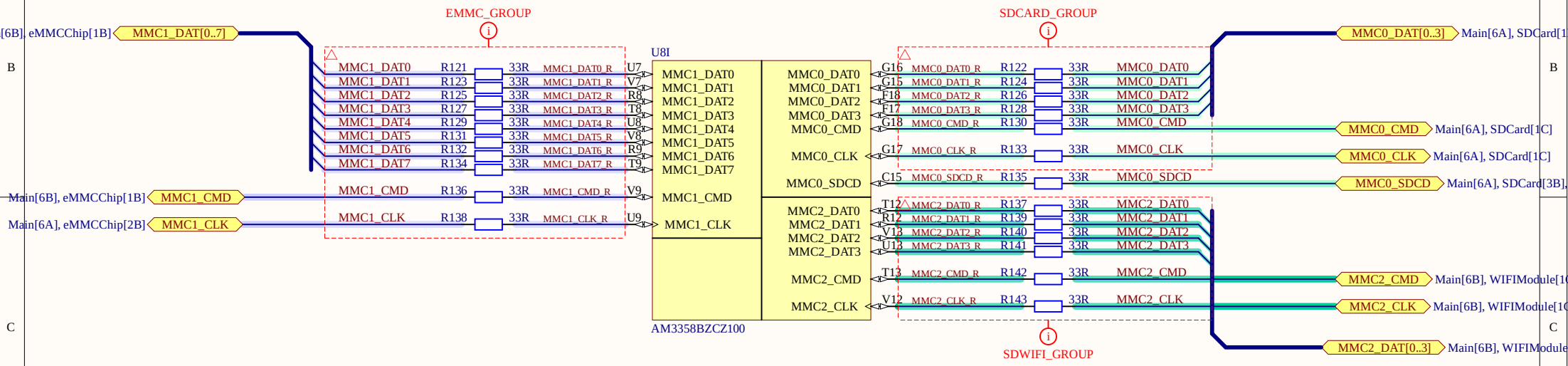

Title		
Size A4	Number	Revision
Date: 8.25.2025	Sheet of	
File: C:\Users\..\SoC_MMC.SchDoc	Drawn By:	

AM3358 Media-independent interface

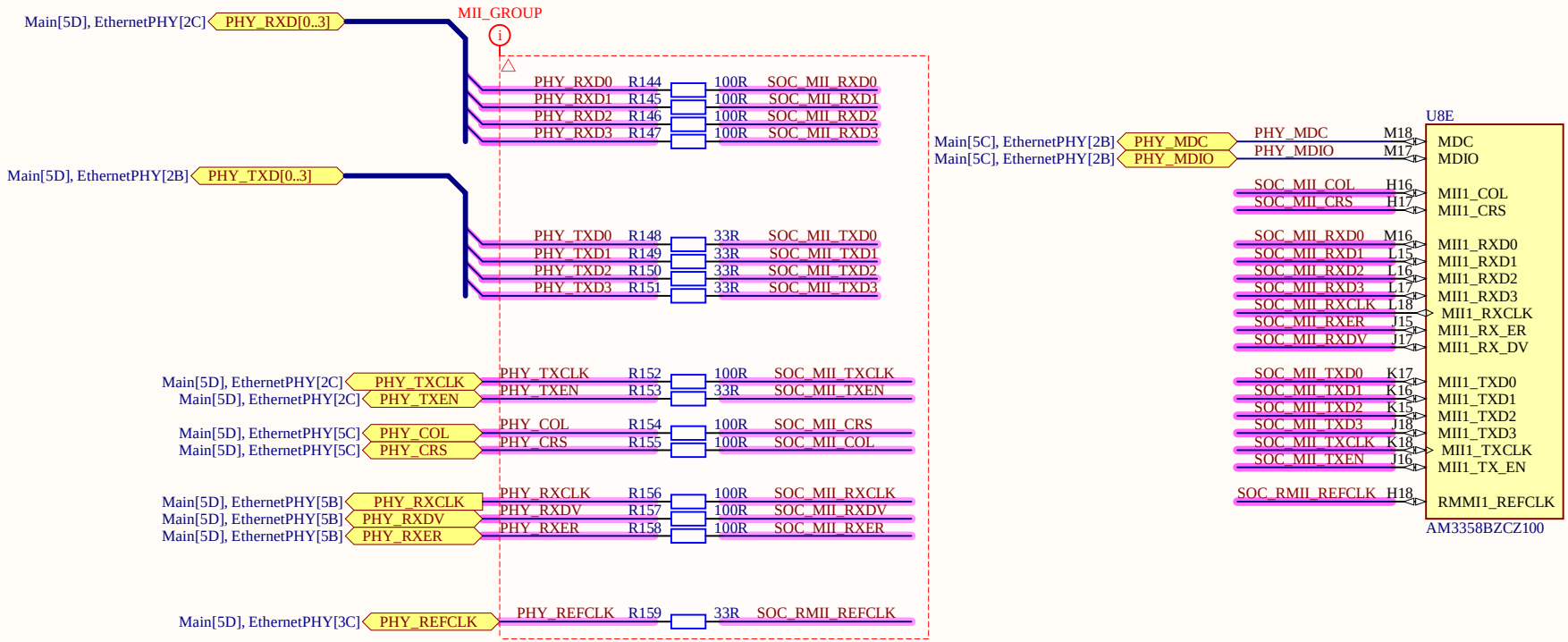

Title		
Size A4	Number	Revision
Date: 8.25.2025		Sheet of
File: C:\Users\..\SoC_MII.SchDoc		Drawn By:

AM3358 Peripheral

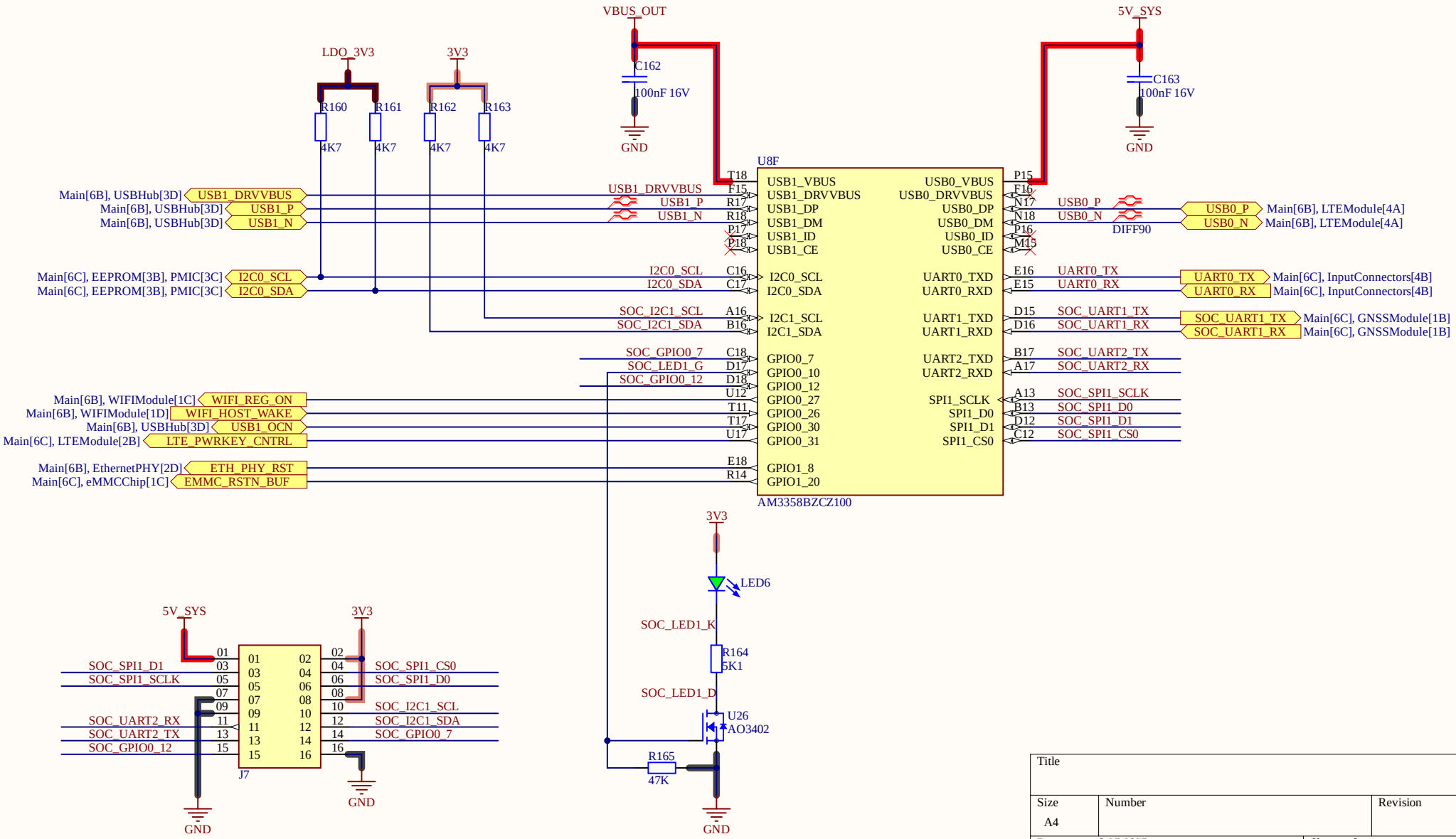

Title		
Size A4	Number	Revision
Date: 8.25.2025		Sheet of
File: C:\Users\..\SoC_Peripheral.SchDoc		Drawn By:

JTAG Debug Probe

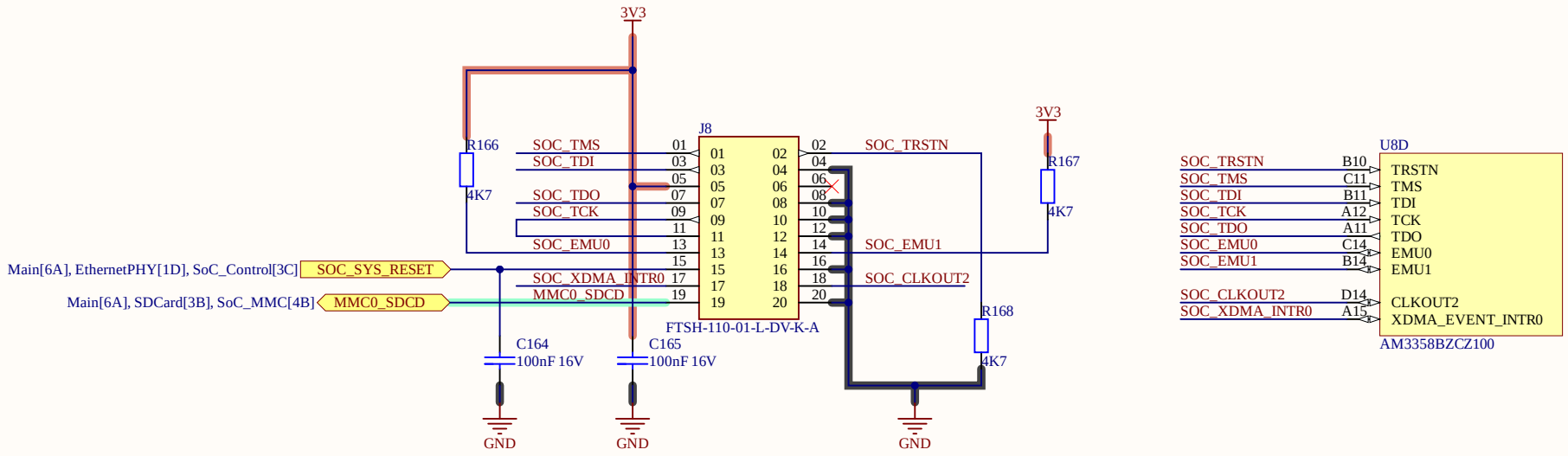

Title		
Size A4	Number	Revision
Date: 8.25.2025		Sheet of
File: C:\Users\..\SoC_Jtag.SchDoc		Drawn By:

RockRTK

Realistic View

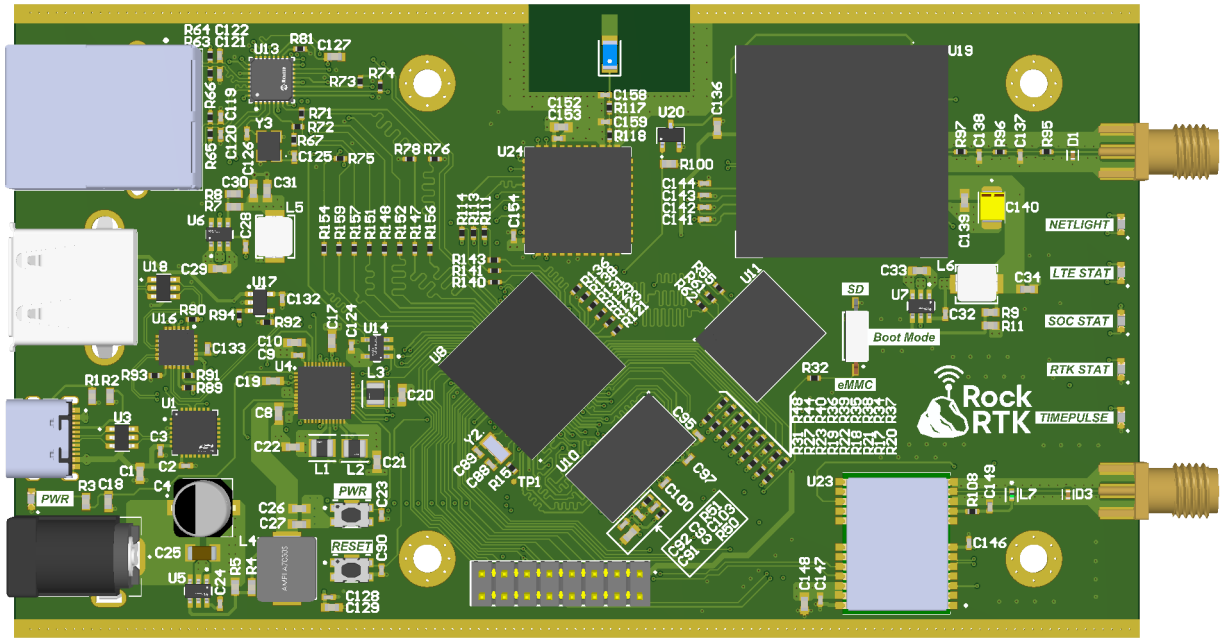
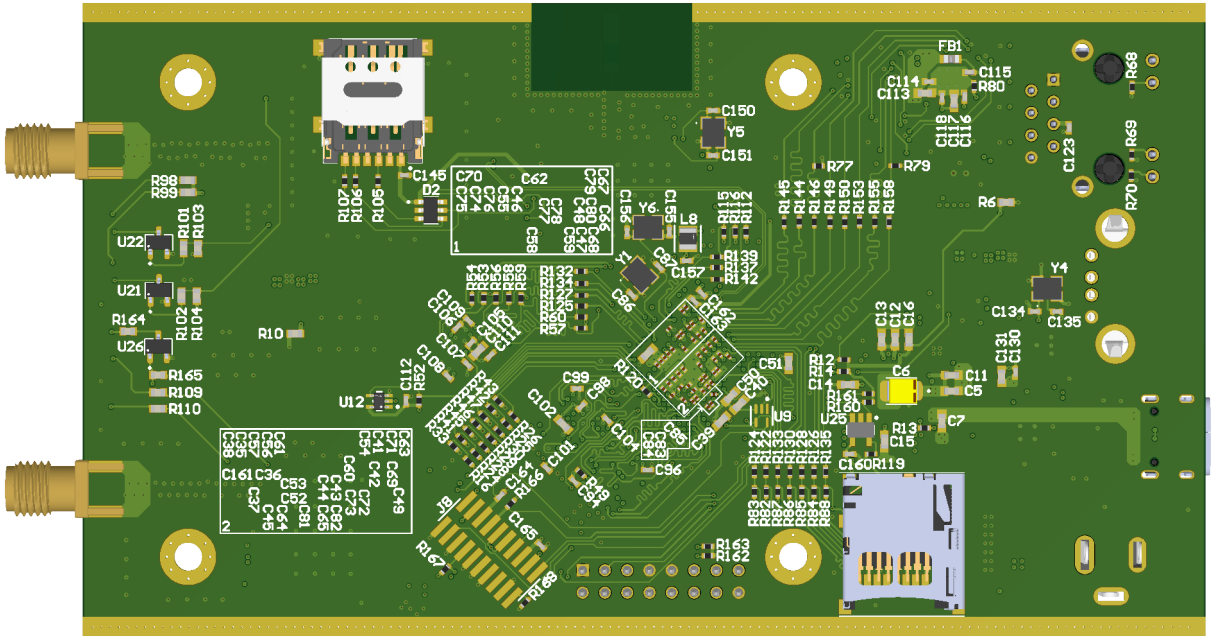
Realistic View