2026
Practical Parallel Computing
(実践的並列コンピューティング)

Part 2: OpenACC
No. 2: Discussion on Speed

Toshio Endo
endo@scrc.iir.isct.ac.jp

Overview of This Course

- Part 0: Introduction
  - 2 classes
- Part 1: Using OpenMP (OMP)
  - 4 classes
  - Report (required)
- Part 2: GPU programming with OpenACC (ACC) ← We are here (2/2)
  - 2 classes
  - Report (required)
- Part 3: GPU programming with CUDA
  - 3 classes
  - Report (elective)
- Part 4: Using MPI
  - 3 classes
  - Report (elective)

Review: Data Region and Kernel Region in OpenACC

```
int main()
{
    A;
#pragma acc data copy(x,y)
    {
#pragma acc kernels
        {
            B;
        }
        C;
#pragma acc kernels
        D;
    }
    E;
}
```

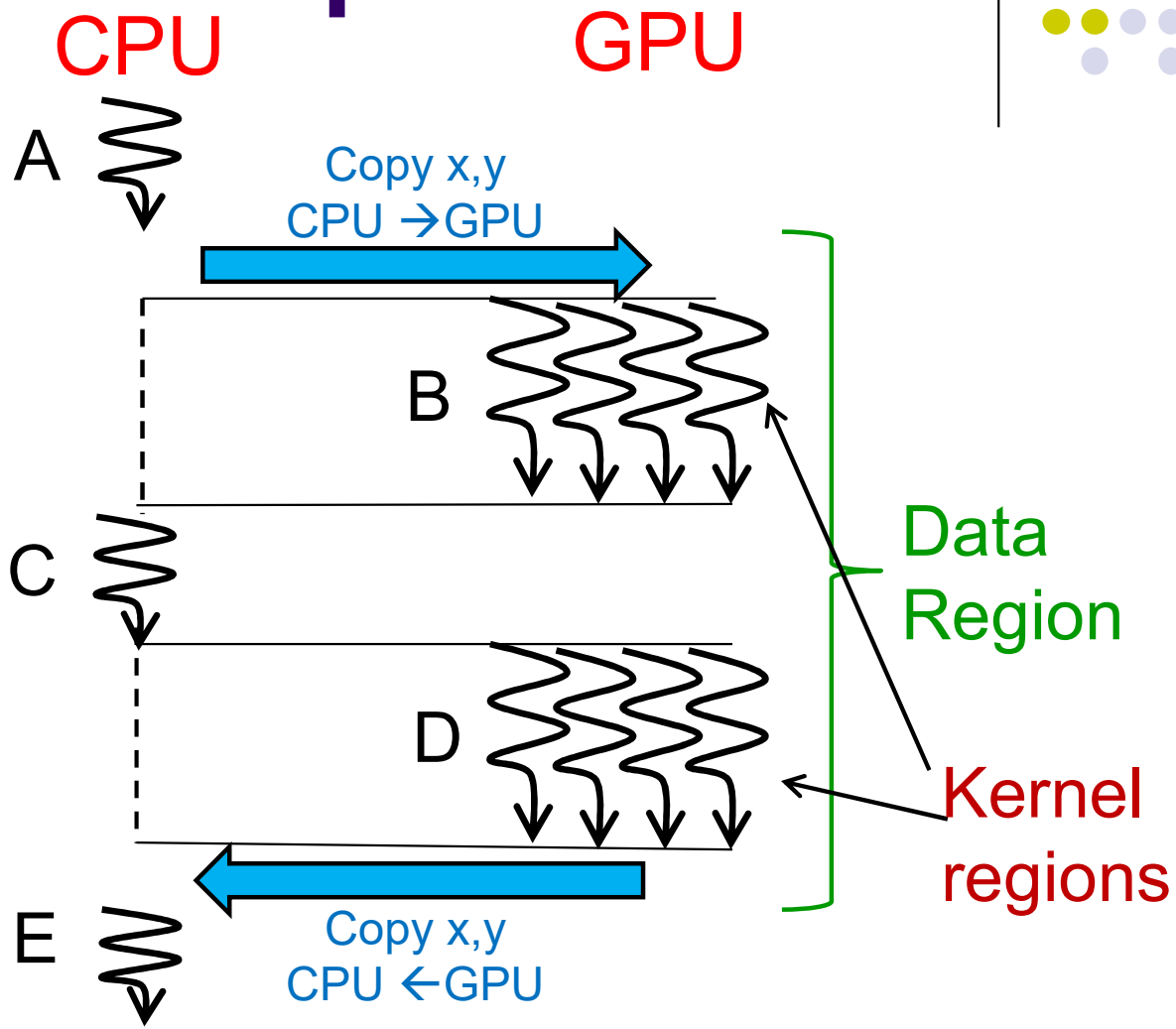

- Data movement occurs at beginning and end of data region
- Data region may contain 1 or more kernel regions

Review: Loop Directive

```
   int a[100], b[100], c[100];
   int i;
#pragma acc data copy(a,b,c)
#pragma acc kernels
#pragma acc loop independent
  for (i = 0; i < 100; i++) {
       a[i] = b[i]+c[i];
  }
```

- #pragma acc loop must be included in "acc kernels" or "acc parallel"
- Directly followed by "for" loop
  - The loop must have a loop counter, as in OpenMP
  - List/tree traversal is NG

- … loop independent: Iterations are done in parallel by multiple GPU threads
- … loop seq: Done sequentially. Not be parallelized
- … loop: Compiler decides

Notes on Assignment [A1][A2]

- You will need compiler options different from the diffusion directory for OpenACC
- You can use files in acc/diffusion or acc/bsort directory as basis
  - .c file is NOT parallelized
  - “Makefile” in these directories supports compiler options for OpenACC
  - Don’t forget “module load nvhpc” before “make”
    - The effect of module is valid until you ‘exit’ from the shell

“diffusion” Sample Program

Target of [A1], details are in 1-2 slides

An example of diffusion phenomena:

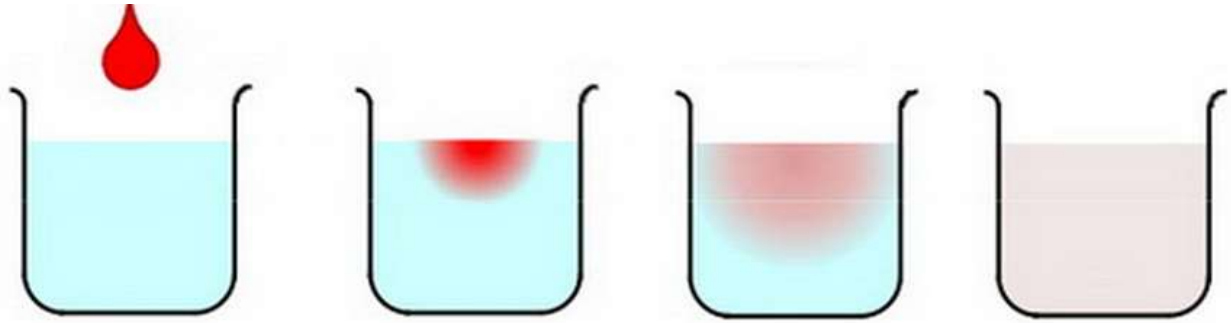

The ink spreads gradually, and finally the density becomes uniform (Figure by Prof. T. Aoki)

Base version: ppcomp-ex/base/diffusion/
You can use ppcomp-ex/acc/diffusion/

```
cd ppcomp-ex/acc/diffusion
module load nvhpc
make
./diffusion 20      // number of time steps
```

Consideration using OpenACC

- Where do we put #pragma acc loop independent ?
  - Which loops are parallelized?
- Where do we put #pragma acc kernels ?
  - It defines kernel region, executed on the GPU
  - Kernel region has to include “... acc loop”
- Where do we put #pragma acc data ?
  - It defines data region
  - Data touched by GPU must be on device memory
  - Too frequent data copy may decrease program speed

How Can We Parallelizing Diffusion?

- x, y loops can be parallelized
  - We can use “#pragma acc loop” twice
- t loop cannot be parallelized

```
[Data transfer from CPU to GPU]
for (t = 0; t < nt; t++) {

  for (y = 1; y < NY-1; y++) {
    for (x = 1; x < NX-1; x++) {
          :
    }
  }
}
[Data transfer from GPU to CPU]
```

Specify kernel region by
#pragma acc kernels
Parallelize x, y loops by
#pragma acc loop ...

Specify data region by
#pragma acc data ...
➔ It’s better to transfer data *out of* t-loop

“diffusion” has Multi-Dimension Array

float dens[2][NY][NX]; // 2 for double buffering

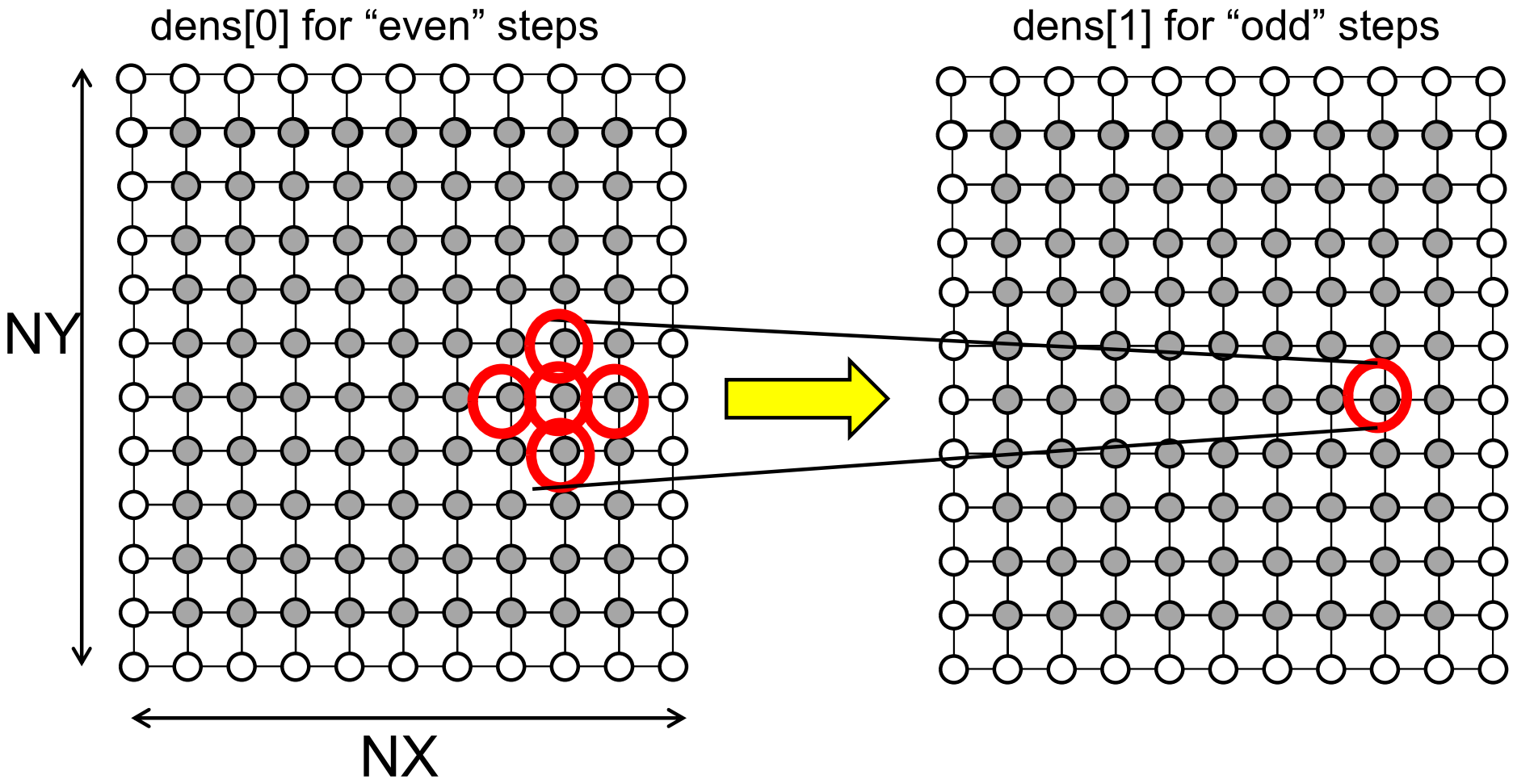

data Clause for Multi-Dimensional arrays

`float` A[2000][1000]; → an example of a 2-dimension array

#pragma acc data copy(A)

→ OK, all elements of A are copied

#pragma acc data copy(A[0:2000][0:1000])

→ OK, all elements of A are copied

#pragma acc data copy(A[500:600][0:1000])

→ OK, rows[500,1100) are copied

#pragma acc data copy(A[0:2000][300:400])

→ Recently OK

“bsort” Sample Program

Target of [A2], details are in 1-2 slides

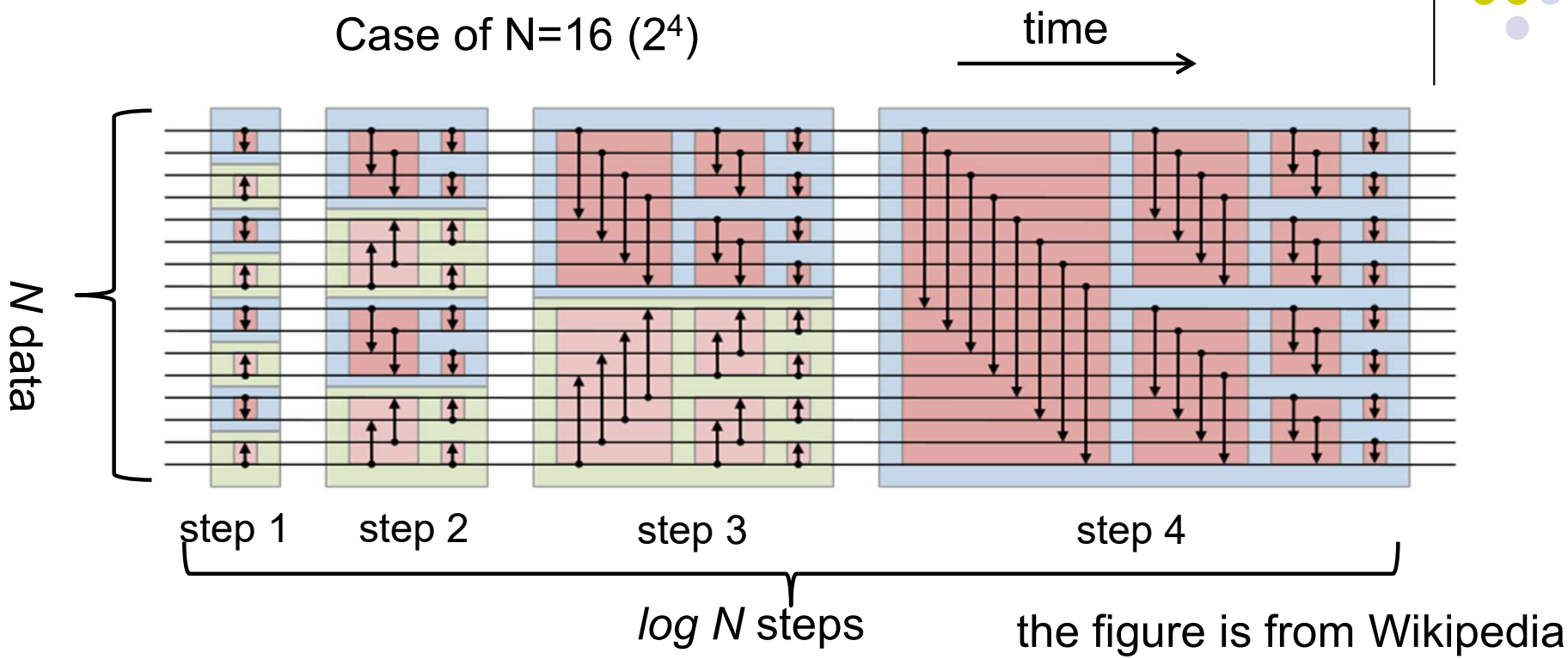

the figure is from Wikipedia

Base version: ppcomp-ex/base/bsort/
You can use ppcomp-ex/acc/bsort/ (see notes in p.3)

```
cd ppcomp-ex/acc/bsort
module load nvhpc  // if not yet
make
./bsort 1000000 // number of elements to be sorted
```

How Can We Parallelize bsort?

- k loops can be parallelized
- i, j loops cannot be parallelized

```
for (i = 1; (1<<i) <= N2; i++) { // step loop
  for (j = i-1; j >= 0; j--) { // sub-step loop
    :
    for (k = 0; k < N2; k++) {
        // compare 2 data and swap
    }
  }
}
```

Specify kernel region by
#pragma acc kernels
Parallelize k loops by
#pragma acc loop ...

Next, where should the data region be?

- Please consider reducing data copy cost

Data Transfer Costs in GPU Programming

Related to [A3], also to [A1] [A2]

- In GPU programming, data transfer costs between CPU and GPU have impacts on speed
  - Program speed may be slower than expected ☹

from 2-1 slides

[A3] Evaluate speed of "acc/mm" sample in detail

ppcomp-ex/acc/mm/

- Use various matrices sizes
- Evaluate effects of data transfer cost
- Compare with CPU (OpenMP) version

Optional:

- To use different loop orders
- To change/improve the program
  - Cache blocking?

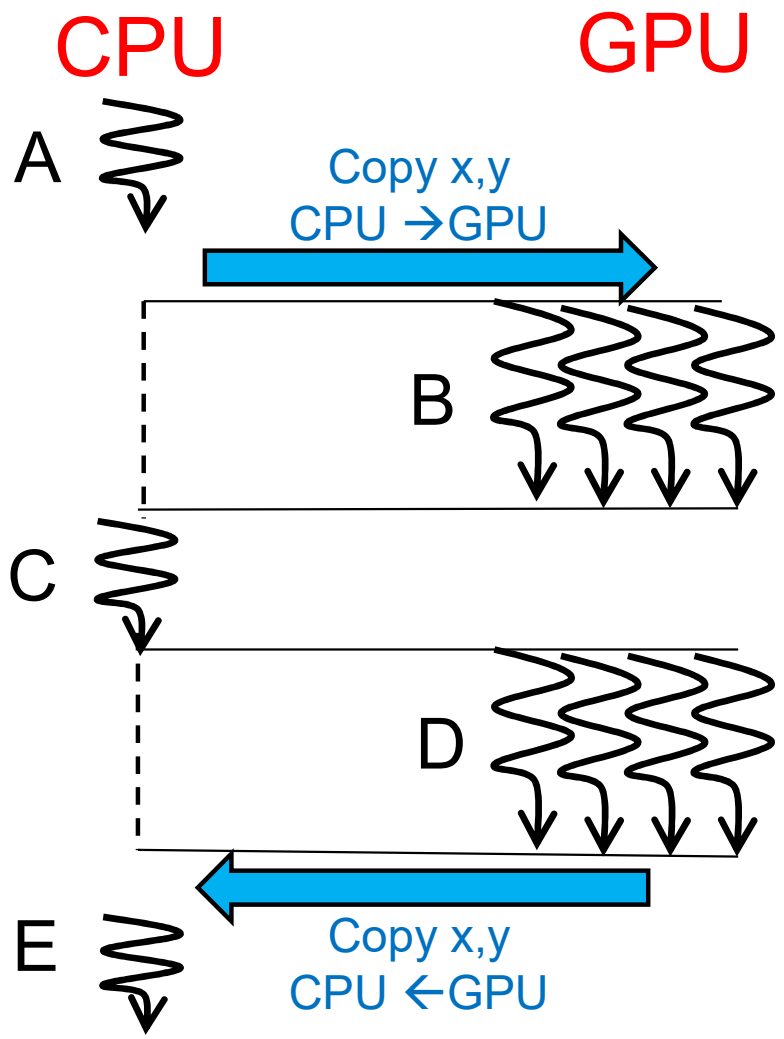

Speed of GPU Programs:
case of acc/mm

In mm-acc, speed in Gflops is computed by

$$S = 2mnk / T_{total}$$

T_{total} includes both computation time and transfer

→ S counts slow-down by transfer

To see the effects, let's try another sample

ppcomp-ex/acc/mm-meas/

which outputs time for

- copyin (transfer A, B, C)
- computation
- copyout (transfer C)

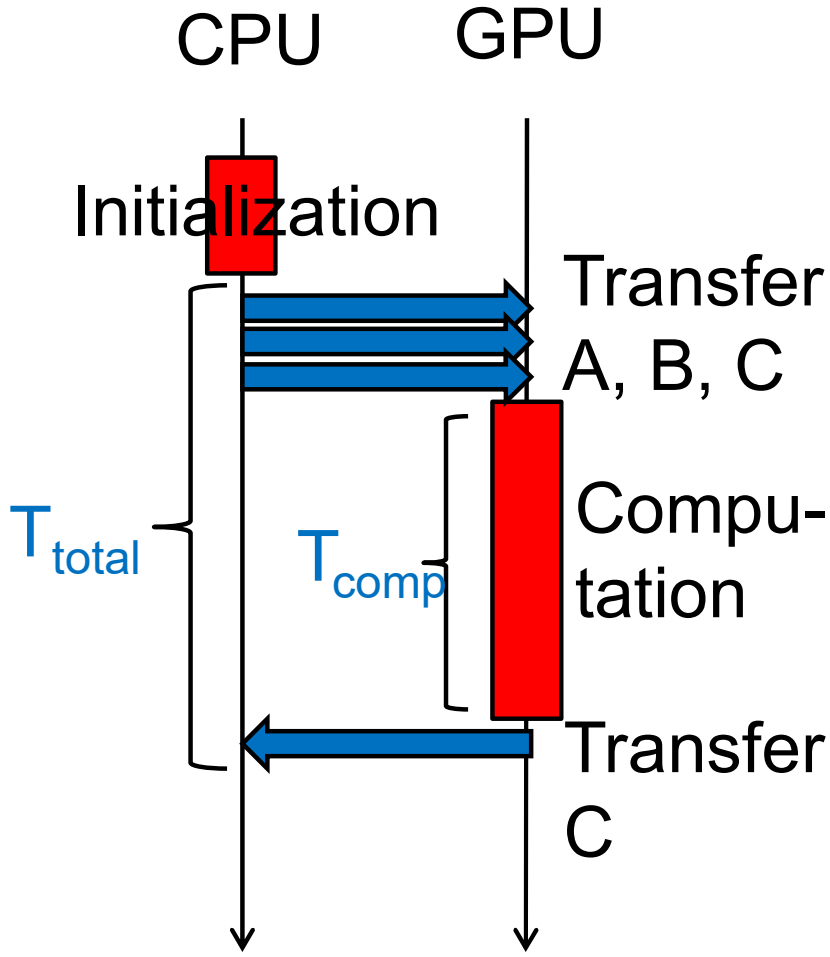

In [A3], please evaluate effects of transfer costs

Measurement of Transfer Time

- Data transfer occurs at the beginning and the end of "data region"

T_{total}

T_{comp}

```
// A,B,C are on CPU

#pragma acc data copyin(A,B) copy(C)
   {  // copyin (CPU->GPU) here

#pragma acc kernels
         {
            :
         }

   }  //copyout (GPU->CPU) here
```

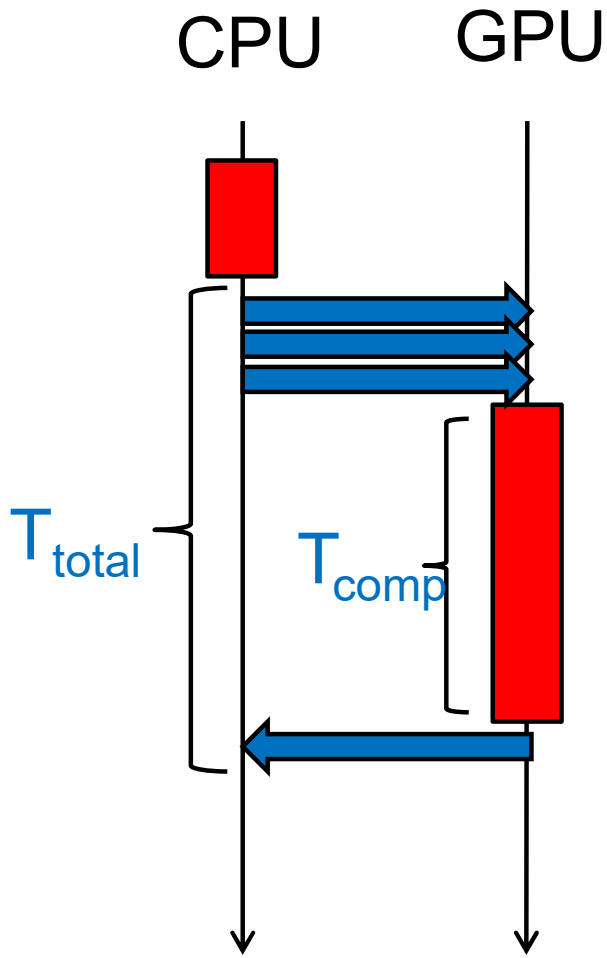

See acc/mm-meas/mm.c

Also note that gettimeofday() must be called on CPU

Discussion on Data Transfer Costs

- Time for data transfer $T_{trans} \fallingdotseq M / B + L$
  - M: Data size in bytes
  - B: “Bandwidth” (speed)
  - L: “Latency” (if M is sufficiently large, <u>we can ignore it</u>)
- In a H100 GPU,
  - Theoretical bandwidth B is 64GB/s $(64 \times 10^9$ Bytes per second)
    - Actual transfer speed is slower than this value

Discussion on Computation and Transfer Costs

In mm-acc,

- Computation amount: 2mnk
- Data transfer amount:
  - A, B, C: CPU → GPU: 8(mk+kn+mn)
  - C: GPU → CPU: 8(mn)

sizeof(double) = 8

Observations:

- We can compute actual transfer speed from $B \doteqdot M / T_{trans}$
  - L is ignored here
- Balance between computation and data transfer changes with different m, n, k

  When m, n, k are 2x:
  - Computation time is 8x
  - Transfer time is 4x

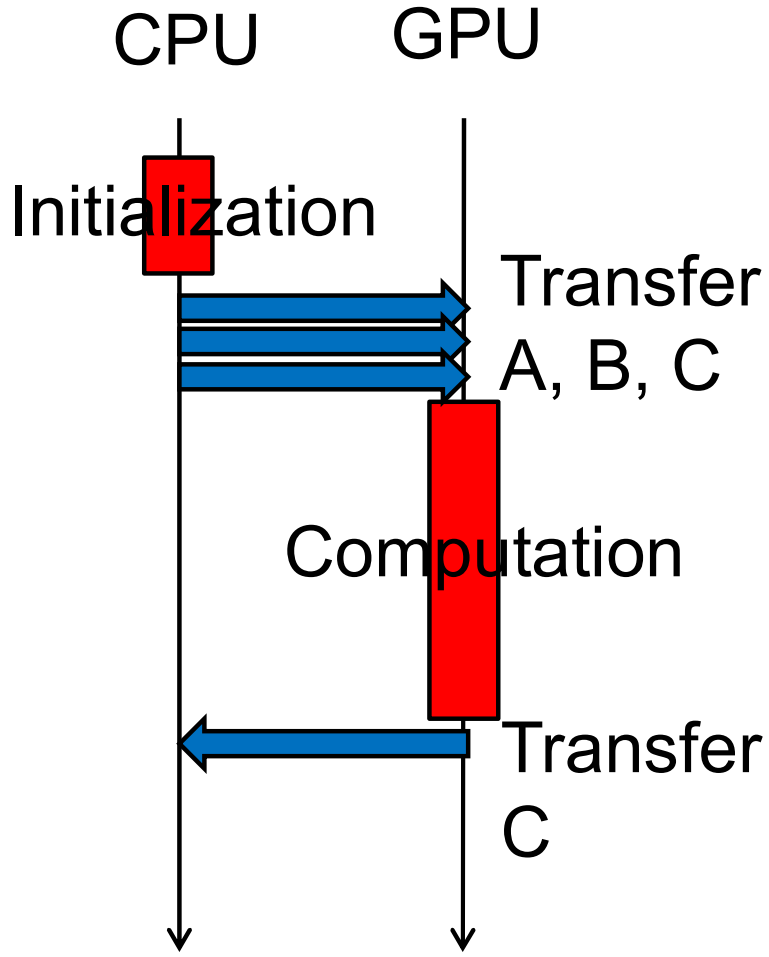

Discussion of data copy cost in diffusion [A1]

- Which is faster?

Data Region

Kernel Region

```
for (t = 0; t < nt; t++) {

  for (y = 1; y < NY-1; y++) {
    for (x = 1; x < NX-1; x++) {
              :
    }
  }
}
```

```
for (t = 0; t < nt; t++) {

  for (y = 1; y < NY-1; y++) {
    for (x = 1; x < NX-1; x++) {
              :
    }
  }
}
```

Computation: O(NX NY nt)
Data copy: O(NX NY)
➔ faster

Computation: O(NX NY nt)
Data copy: O(NX NY nt)

Speed of Parallel Loop in OpenACC

- Speed of parallel loop may be changed by “acc loop” unpredictably

Which is better? ➔ Try&error will be required

```
#pragma acc data ...
#pragma acc kernels
#pragma acc loop independent
  for (j = 0; j < n; j++) {
#pragma acc loop seq
    for (l = 0; l < k; l++) {
#pragma acc loop independent
      for (i = 0; i < m; i++) {
        Ci,j += Ai,l * Bl,j;
      } } }
```

```
#pragma acc data ...
#pragma acc kernels
#pragma acc loop independent
  for (j = 0; j < n; j++) {
#pragma acc loop independent
    for (i = 0; i < m; i++) {
#pragma acc loop seq
      for (l = 0; l < k; l++) {
        Ci,j += Ai,l * Bl,j;
      } } }
```

Inside OpenACC Parallel Loop

- Parallel loops use “gang” parallelism and “vector” parallelism internally

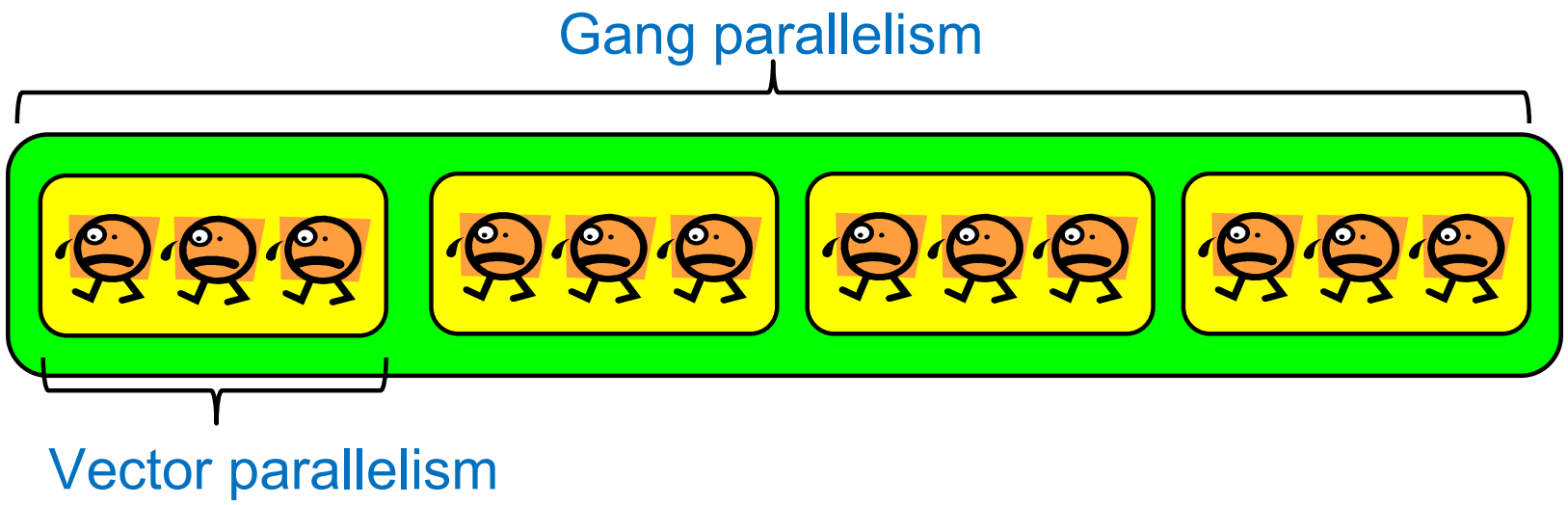

- Using both is important for speed
- Basically the compiler decides
  - Additionally user can specify

Hints in Compiler Messages

- Let's check whether both "gang" and "vector" appear!

```
        :
53, Generating NVIDIA GPU code
    53, #pragma acc loop gang /* blockIdx.x */
    55, #pragma acc loop vector(128) /* threadIdx.x */
55, Loop is parallelizable
        :
```

- If not, reconsidering is better…

No gang
Here ☹

```
43, #pragma acc loop seq
    53, #pragma acc loop vector(128) collapse(2) /* threadIdx.x */
    55,   /* threadIdx.x collapsed */
43, Complex loop carried dependence of dens prevents parallelization
53, Loop is parallelizable
55, Loop is parallelizable
```

Additional Syntaxes, Options (1)

- #pragma acc parallel
  - Similar to #pragma acc kernels
  - With “kernels”, the compiler decides more
  - With “parallel”, the compiler is more user-oriented

```
#pragma acc data ...
#pragma acc kernels
#pragma acc loop independent
  for (j = 0; j < n; j++) {
#pragma acc loop seq
    for (l = 0; l < k; l++) {
#pragma acc loop independent
      for (i = 0; i < m; i++) {
        Ci,j += Ai,l * Bl,j;
      } } }
```

```
#pragma acc data ...
#pragma acc parallel
#pragma acc loop independent
  for (j = 0; j < n; j++) {
#pragma acc loop seq
    for (l = 0; l < k; l++) {
#pragma acc loop independent
      for (i = 0; i < m; i++) {
        Ci,j += Ai,l * Bl,j;
      } } }
```

Which is better? ➔ It depends on programs

Additional Syntaxes, Options (2)

- Users can add “gang”, “vector” options to “acc loop”
  - It may be disregarded, especially with “kernels”
  - Check compiler’s message

```
#pragma acc data ...
#pragma acc kernels
#pragma acc loop independent gang
  for (j = 0; j < n; j++) {
#pragma acc loop seq
    for (l = 0; l < k; l++) {
#pragma acc loop independent vector
      for (i = 0; i < m; i++) {
        Ci,j += Ai,l * Bl,j;
      } } }
```

Also “gang, vector” is ok

Additional Syntaxes, Options (3)

#pragma acc loop independent collapse(2)

➔ The compiler tries parallelization of 2 nested loops

```
#pragma acc data ...
#pragma acc kernels
#pragma acc loop independent collapse(2)
  for (j = 0; j < n; j++) {

    for (i = 0; i < m; i++) {
      for (l = 0; l < k; l++) {
        Ci,j += Ai,l * Bl,j;
      } } }
```

```
#pragma acc data ...
#pragma acc kernels
#pragma acc loop independent
  for (j = 0; j < n; j++) {
#pragma acc loop independent
    for (i = 0; i < m; i++) {
      for (l = 0; l < k; l++) {
        Ci,j += Ai,l * Bl,j;
      } } }
```

(Almost) same meanings

Mutual Exclusion is Limited on GPU (1)

(Maybe related to [A4])

- Generally, care is needed when shared variables are modified in parallel (see 1-4 slides)

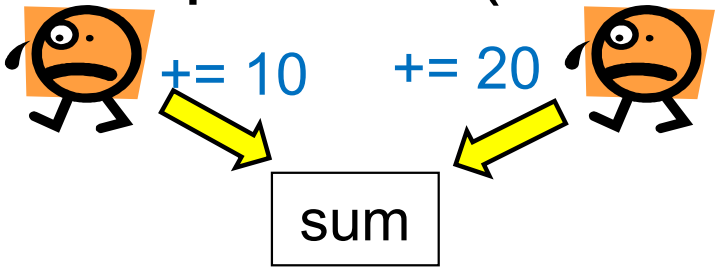

Warning
Take care of
Race condition!

- In OpenMP, “omp critical” is used for safety

```
    double sum = 0;
#pragma omp parallel
    {
        [ do something ]
#pragma omp critical
        sum += myans;
    }
```

- OpenACC does NOT have “~~acc critical~~” ☹

Mutual Exclusion is Limited on GPU (2)

- Instead, we can use "acc atomic"
  - See acc/pi-atom (very slow) and acc/pi-atom2 (slow a bit)

```
   double sum = 0;
#pragma acc kernels
   {
      [ do something ]
#pragma acc atomic
      sum += myans;
   }
```

- What's difference between "critical" and "atomic"?
  - critical (OpenMP): critical section with any length is supported
  - atomic (OpenACC, OpenMP): limited to "1 update to a shared variable"

Note on OpenACC: Function Calls from GPU

- Calling functions in kernel region is ok, but we need to be careful
  - "acc routine" directive is required by compiler to generate GPU code

```
int main()
{

#pragma acc kernels
   {

        … func(A[i]) …

   }

}
```

```
#pragma acc routine
int func(int arg)
{
    :
    :
    return …;
}
```

How about Library Functions?

Inside kernel regions (#pragma acc kernel),

- Available library functions is very limited ☹
- We cannot use strlen(), memcpy(), fopen(), fflush()… ☹
- We cannot use gettimeofday() ☹

- Exceptionally, some mathematical functions are ok ☺
  - fabs, sqrt, fmax…
  - #include <math.h> is needed
- Recently, printf() in kernel regions is ok! ☺

Limitation of OpenACC (Some are Limitations of GPU)

- Task parallel program is not supported
  - like fib, qsort
  - Also CUDA is hard
- Mutual exclusion is not supported (generally)

  There are limited supports
  - OpenACC supports “acc loop reduction(...)” and “acc atomic”
    - acc/pi-atom (very slow) and acc/pi-atom2 (slow a bit) use “acc atomic”
  - CUDA also supports atomic operations, but no mutex
- Hard to use some hardware features
  - Synchronize in thread block, SM’s shared memory, Tensor core...
  - CUDA can use

Assignments in OpenACC Part (1)

Choose one of [A1]—[A4], and submit a report

Due date: May 14 (Thursday)

[A1] Parallelize “diffusion” sample program by OpenACC

[A2] Parallelize “bsort” sample program by OpenACC

[A3] Evaluate speed of “acc/mm” sample in detail

[A4] (Freestyle) Parallelize *any* program by OpenACC

For more details, please see ppcomp26-2-1 slides

Next: CUDA Part for GPU programming

- No. 1
  - Introduction to CUDA, kernel functions
- No. 2
  - Characteristics of grid, thread blocks, threads
- No. 3
  - Performance improvement on GPU

- <u>Today is due date of OpenMP part report</u>