2026 Practical Parallel Computing (実践的並列コンピューティング)

Part 2: OpenACC

No. 1: Introduction of GPU and OpenACC

Toshio Endo

endo@scrc.iir.isct.ac.jp

Overview of This Course

- Part 0: Introduction
  - 2 classes
- Part 1: Using OpenMP (OMP)
  - 4 classes
  - Report (required)
- Part 2: GPU programming with OpenACC (ACC) ← We are here (1/2)
  - 2 classes
  - Report (required)
- Part 3: GPU programming with CUDA
  - 3 classes
  - Report (elective)
- Part 4: Using MPI
  - 3 classes
  - Report (elective)

Parallel Programming Methods on TSUBAME

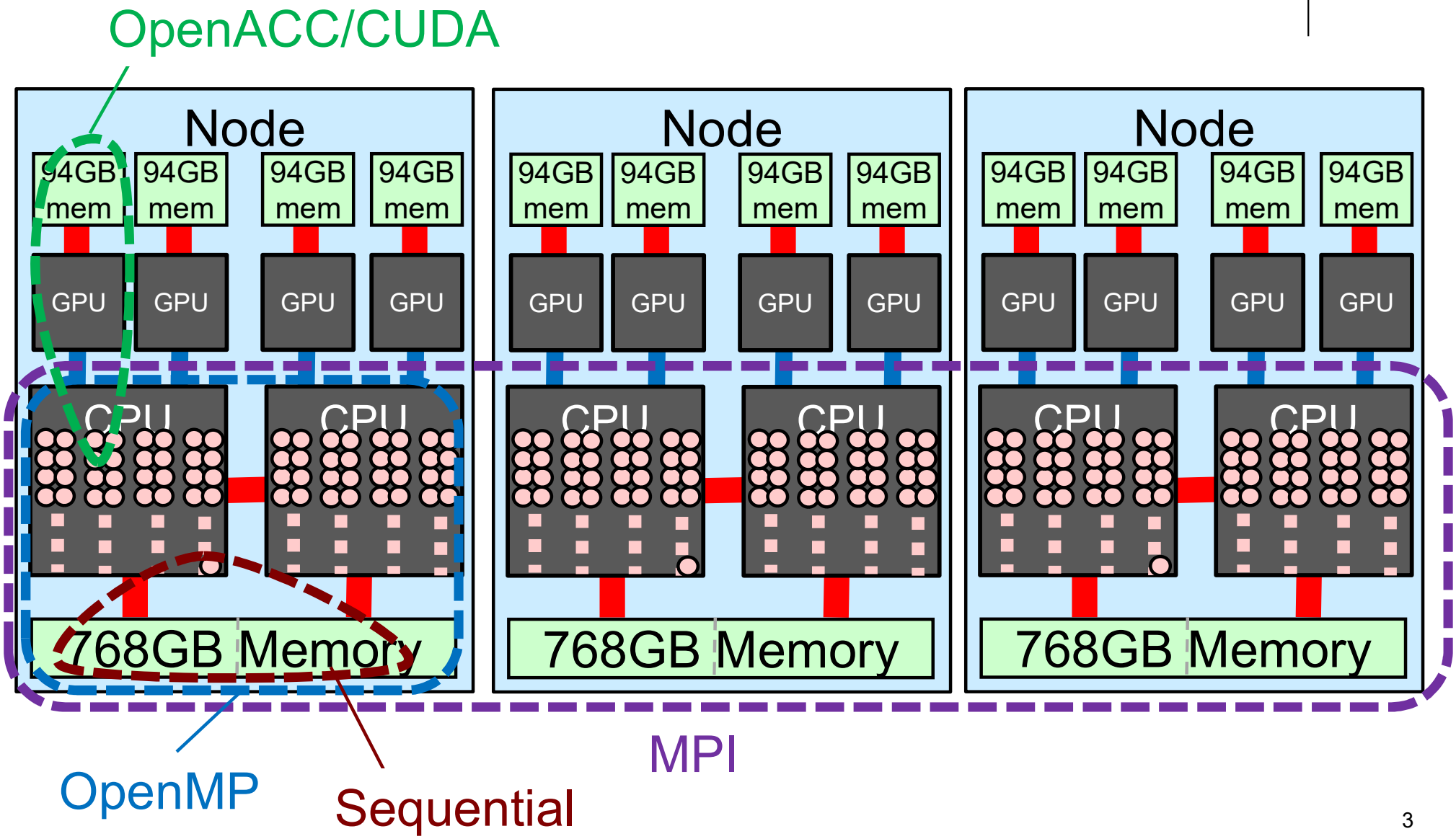

GPU Computing

- Graphic processing units (GPU) have been originally used for computing graphics (including video games)
- A high performance GPU has many cores
  - CPU: 2 to 32 cores. GPU: >1000 cores
  - The concept is called GPGPU (General-Purpose computing on GPU)
- GPGPU became popular since NVIDIA invented CUDA language in 2007
  - Recently it is popular for deep learning

GPU
(for gaming PC)

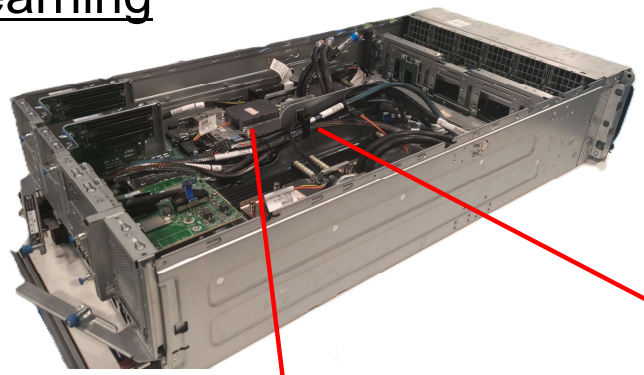

TSUBAME4
node

GPU

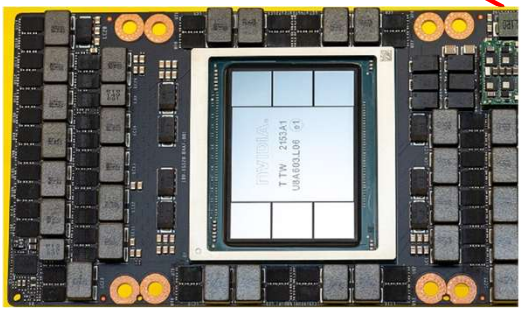

A Compute Node with GPU

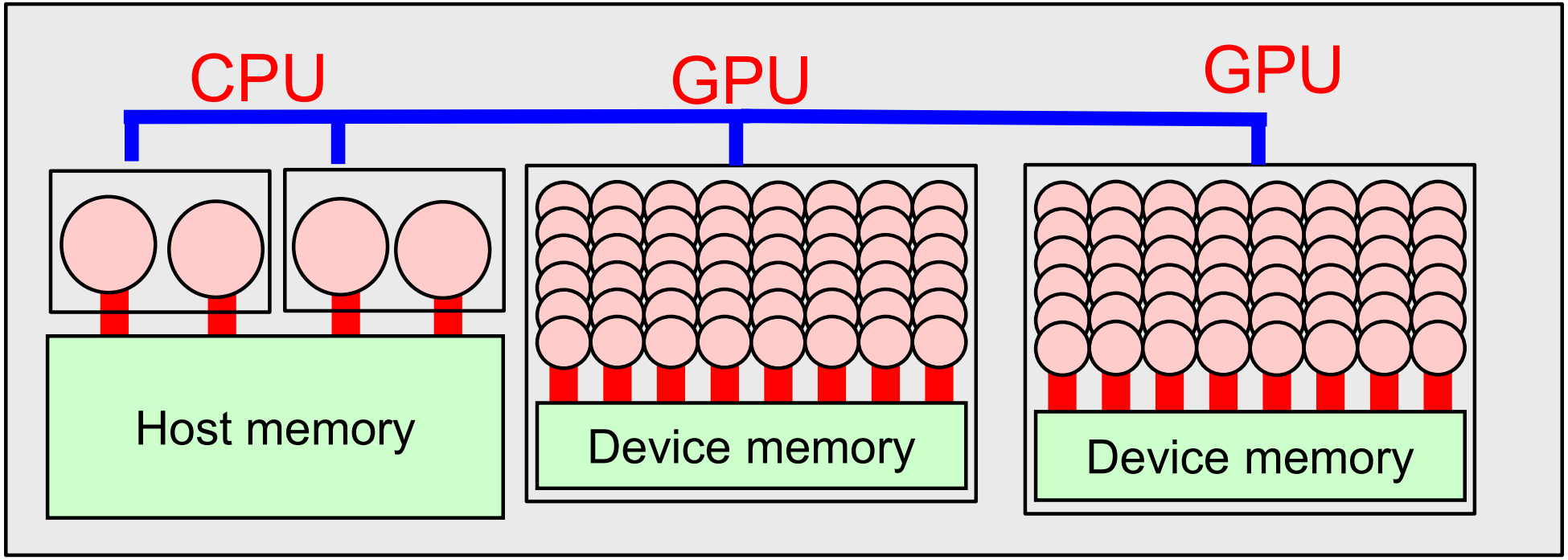

- A GPU has its distinct memory (device memory)
  - CPU memory is called host memory
- Many cores in a GPU share its device memory
- If there are multiple GPUs, each has its device memory

Characteristics of GPUs

A GPU is a board or a card attached to computers
→ It cannot work alone. Driven by CPUs
→ Different programming methods

Comparing EPYC 9654 (TSUBAME4's CPU) and
Tesla H100-94GB (TSUBAME4's GPU)

	1 CPU		1 GPU
Number of cores	96 cores (192 cores with 2CPUs)	<<	16,896 CUDA cores (=128 x 132SMXs)
Clock Frequency	3.55GHz (with boost)	>	1.98GHz
Peak Computation Speed (double precision)	5.45TFlops	<<	66.9TFlops
Memory Capacity	384GB (768GB shared by 2CPUs)	>	94GB

Notes on TSUBAME Interactive Node

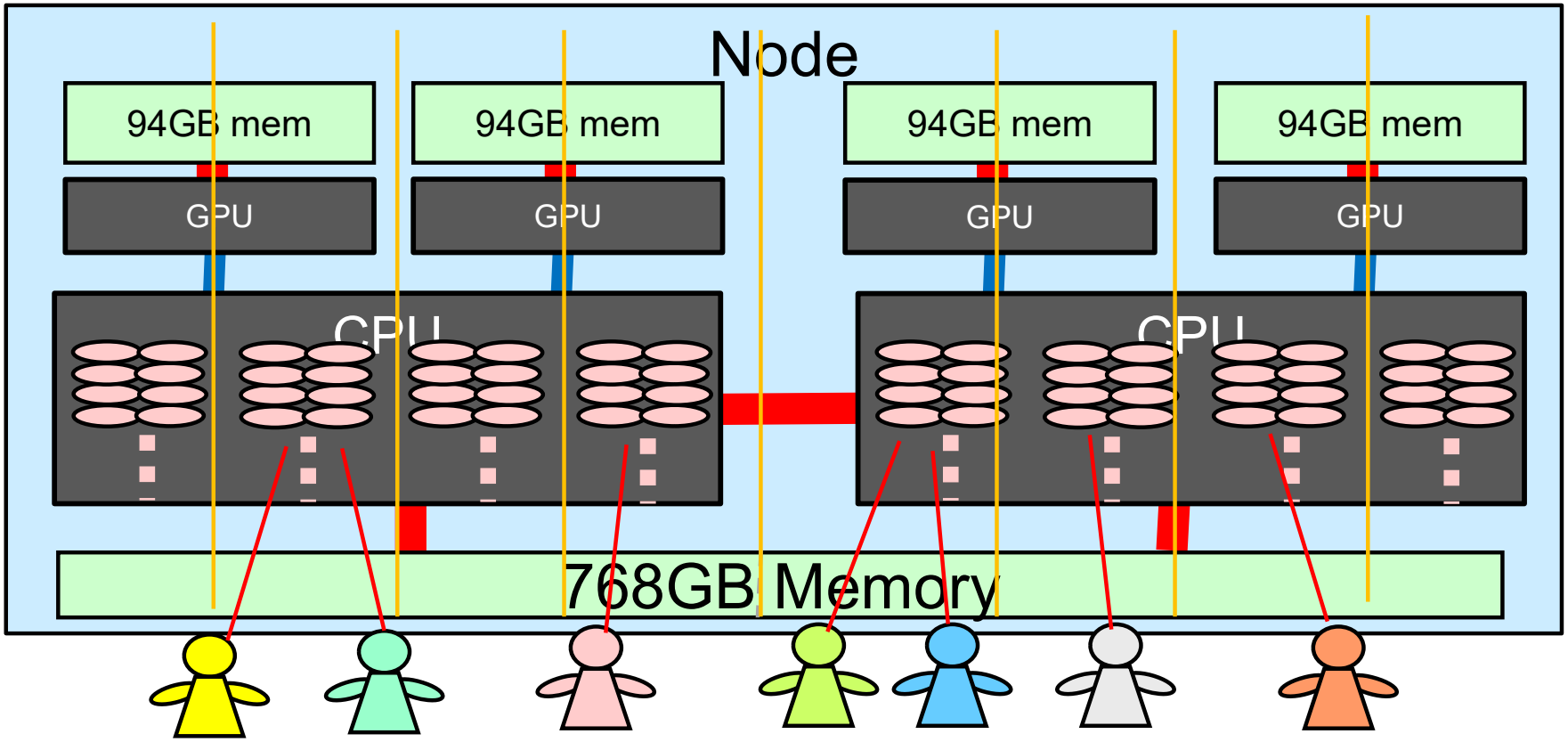

In an interactive node, each user uses 0.5 GPU

- 7,680 CUDA cores (128x60SMs), ~46GB memory

If you want use “a full GPU”, you may try “qsub” (described later)

Programming Environments for NVIDIA GPUs

- CUDA ← We will use after OpenACC
  - The most famous environment, designed by NVIDIA
  - C/Fortran + new syntaxes
  - Use “nvcc” command for compile
    - module load cuda
    - nvcc … XXX.cu
  - For more general programs than OpenACC ☺
- OpenACC ← Today’s topic
  - C/Fortran + directives (#pragma acc …), Easier programming ☺
  - Supported by NVIDIA HPC SDK
    - module load nvhpc
    - nvc -acc … XXX.c
  - For parallel programs with for-loops
- OpenMP 5, OpenCL…

An OpenACC Program Looks Like

C/C++/Fortran + directives

```
   int a[100], b[100], c[100];
   int i;
#pragma acc data copy(a,b,c)
#pragma acc kernels
#pragma acc loop independent
  for (i = 0; i < 100; i++) {
       a[i] = b[i]+c[i];
  }
```

Examples of OpenACC *directives*

In this case, each directive has an effect on the following block/sentence

OpenACC is not so popular as OpenMP, unfortunately☹

- gcc's support is not so good
- On TSUBAME4, we use NVIDIA HPC SDK

OpenACC Version of "mm" sample

ppcomp-ex/acc/mm/

A: a (m × k) matrix, B: a (k × n) matrix

C: a (m × n) matrix

$C \leftarrow A \times B$

- Algorithm with a triply-nested for-loop
- Supports variable matrix size.
  - Each matrix is expressed as a 1D array by *column-major* format

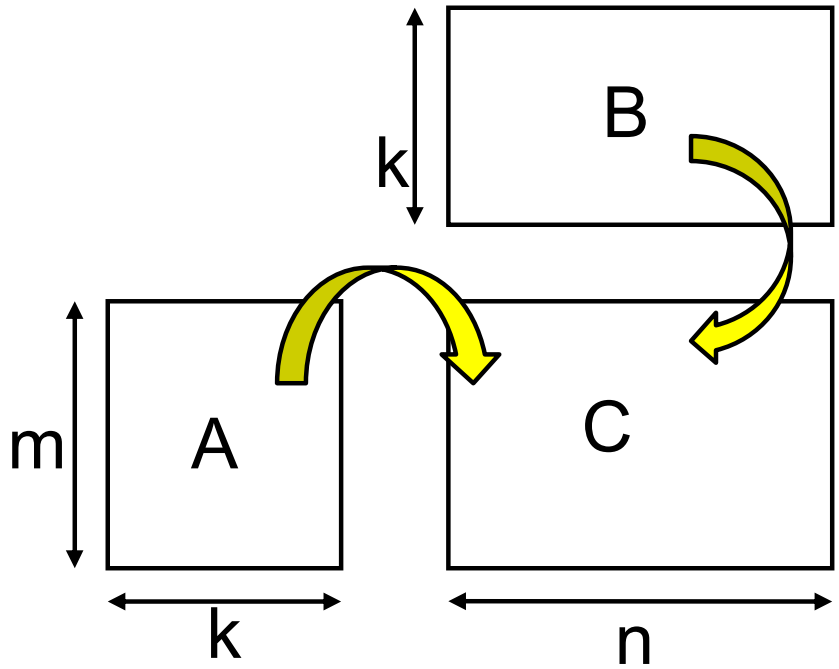

- Execution: ./mm [m] [n] [k]

Using acc/mm Sample

```
[make sure that you are at a interactive node (rXn11) ]
module load nvhpc    [Do once after login]
[please go to your ppcomp-ex directory]
cd acc/mm
make
[You will see some messages, and an executable file
"mm" is created]
./mm 2000 2000 2000
```

Notes on Compiling OpenACC Programs

- NVIDIA HPC SDK on TSUBAME4.0
  - module load nvhpc, and then use nvc command
  - Use -acc option in compiling and linking
  - -Minfo=accel option outputs many information on parallelization

Example of output

```
        :
   26, Generating copyin(A[:m*k])
       Generating copy(C[:m*n])
       Generating copyin(B[:k*n])
       Loop is parallelizable
        :
```

They are not errors ☺

Kernel Region in OpenACC

```
int main()
{
    A;
#pragma acc kernels
    {
        B;
    }
    C;
#pragma acc kernels
    D;
    E;
}
```

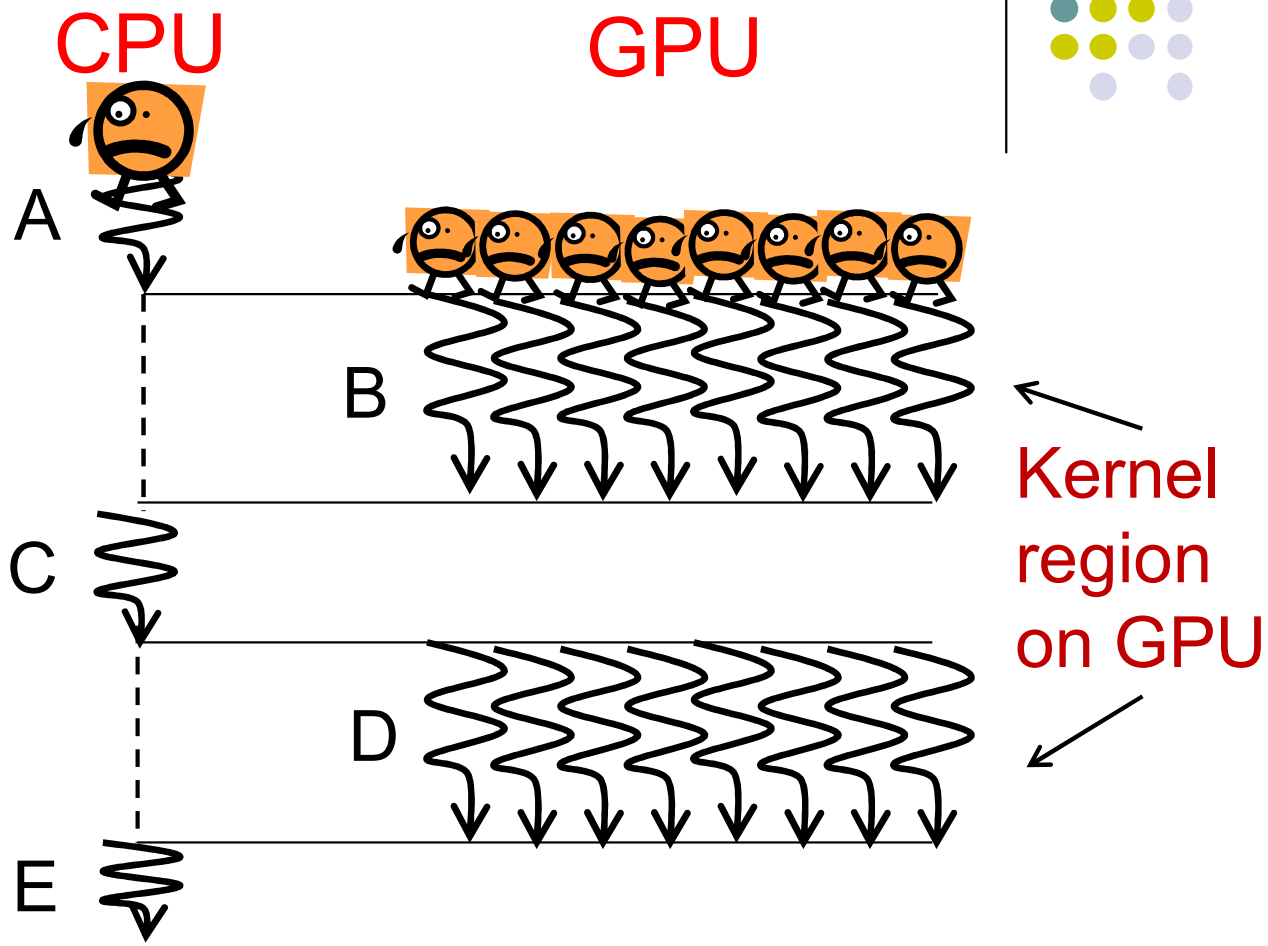

A sentence/block immediately after #pragma acc kernels is called a kernel region, executed on GPU

- We don't need to specify number of threads (it is hard to specify explicitly)

Data Movement between CPU and GPU

- We need to move data between CPU and GPU
  - Host (CPU) memory and Device (GPU) memory are distinct, like distributed memory
  - Threads on a GPU share the device memory

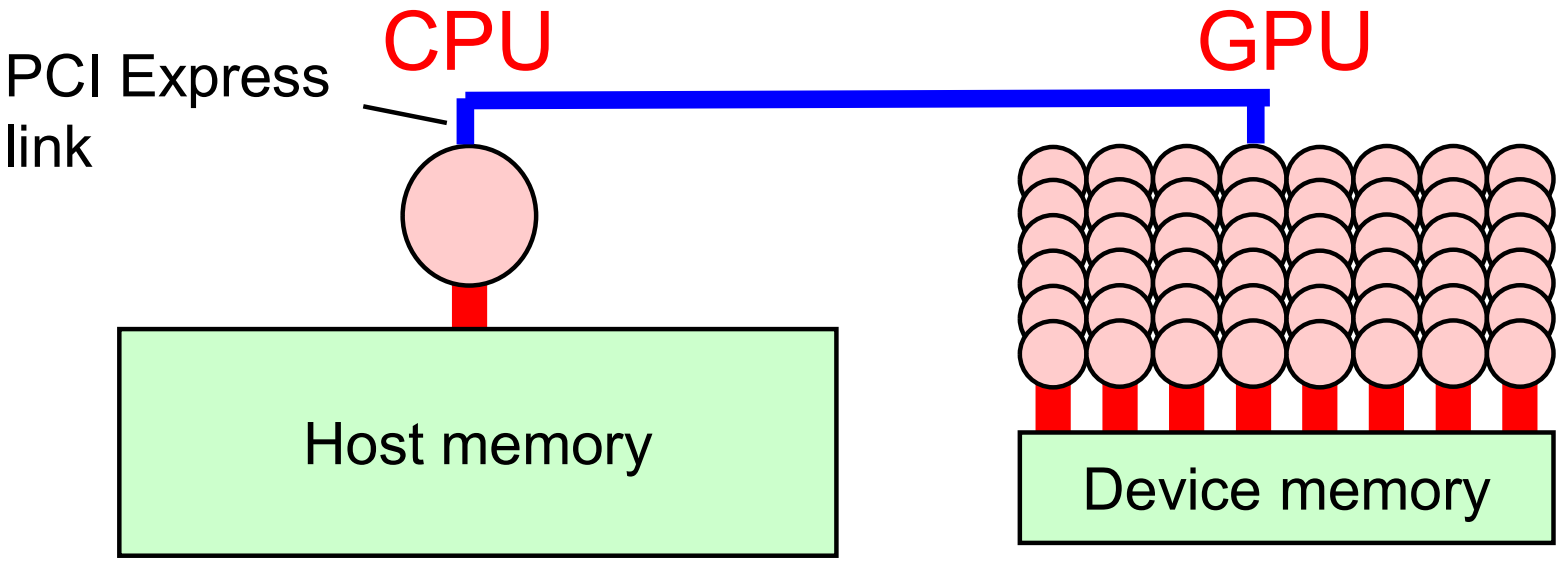

For this purpose, we use #pragma acc data directive
→ This defines a data region

Data Directives to use GPU memory

```
int main()
{
    A;
#pragma acc data copy(x,y)
    {
#pragma acc kernels
        {
            B;
        }
        C;
#pragma acc kernels
        D;
    }
    E;
}
```

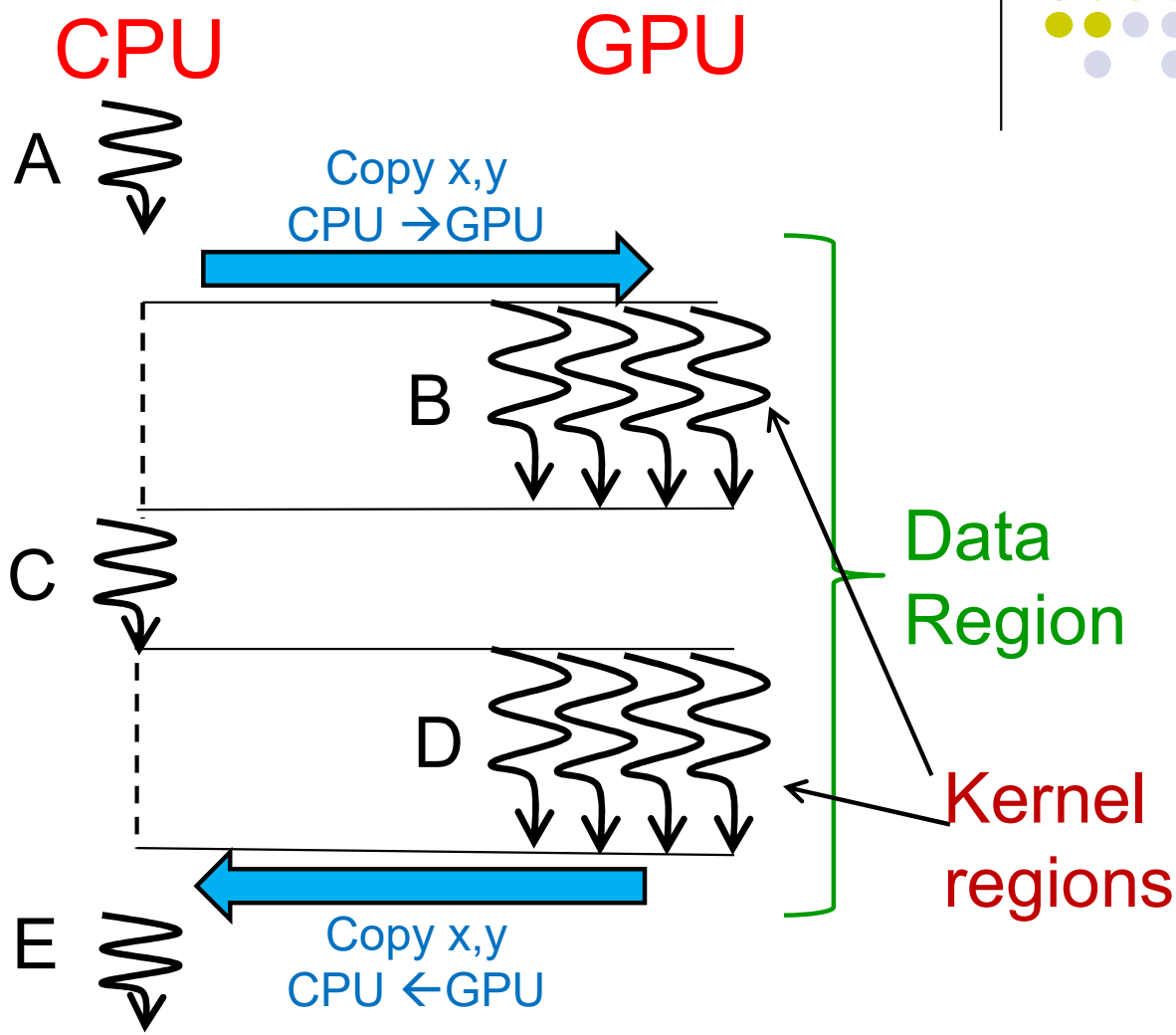

- Data region may contain 1 or more kernel regions
- Data movement occurs at beginning and end of data region

Data Directive (1)

- Arrays (like a):
  - we can write array names if the sizes are statically declared → entire array is copied
- Pointers as arrays (like b):

  cf) b [0 : 20]

  start index number of elements
  - Partial copying like b[10:5] or a[4:4] work
- Scalar variables (like x):
  - You can omit copy(x) ➔ The compiler detects automatically ☺

```
int x;
float a[10];
double *b = (double*)
    malloc(20*sizeof(double));
    :
#pragma acc data copy(x, a, b[0:20])
    :
```

Same meaning

```
#pragma acc data copy(a[0:10], b[0:20])
```

Data Directive (2)

- Directions of copying
  - … data copyin(…): Copy CPU→GPU at the begininng
  - … data copyout(…): Copy GPU→CPU at the end
  - … data copy(…): Do both

  Optimization of data movement will help speedup

Loop Directive

```
   int a[100], b[100], c[100];
   int i;
#pragma acc data copy(a,b,c)
#pragma acc kernels
#pragma acc loop independent
  for (i = 0; i < 100; i++) {
       a[i] = b[i]+c[i];
  }
```

- #pragma acc loop must be included in "acc kernels" or "acc parallel"
- Directly followed by "for" loop
  - The loop must have a loop counter, as in OpenMP
  - List/tree traversal is NG

- … loop independent: Iterations are done in parallel by multiple GPU threads
- … loop seq: Done sequentially. Not be parallelized
- … loop: Compiler decides

OpenACC Version of mm (acc/mm/mm.c)

```
#pragma acc data copyin(A[0:m*k],B[0:k*n]),copy(C[0:m*n])
#pragma acc kernels
#pragma acc loop independent
  for (j = 0; j < n; j++) {
#pragma acc loop seq
    for (l = 0; l < k; l++) {
#pragma acc loop independent
      for (i = 0; i < m; i++) {
        Ci,j += Ai,l * Bl,j;
      } } }
```

We can omit "copyout" of A,B

←For each column in C

←For dot product

←For each row in C

- Each element in C can be computed in parallel (i-loop, j-loop)
- Computation of a single C element is sequential (l-loop)

Why Different from OpenMP Version? (1)

omp/mm/mm.c

```
#pragma omp parallel …
#pragma omp for
  for (j = 0; j < n; j++) {

    for (l = 0; l < k; l++) {

      for (i = 0; i < m; i++) {
        Ci,j += Ai,l * Bl,j;
      } } }
```

acc/mm/mm.c

```
#pragma acc data ...
#pragma acc kernels
#pragma acc loop independent
  for (j = 0; j < n; j++) {
#pragma acc loop seq
    for (l = 0; l < k; l++) {
#pragma acc loop independent
      for (i = 0; i < m; i++) {
        Ci,j += Ai,l * Bl,j;
      } } }
```

- “acc data” is introduced for different GPU memory
- “omp parallel” ➔ “acc kernels”
  - Note: “acc parallel” is also ok, but it has a bit different behavior
- “omp for” ➔ “acc loop independent”

Why Different from OpenMP Version? (2)

omp/mm/mm.c

```
:
for (j = 0; j < n; j++) {

  for (l = 0; l < k; l++) {

    for (i = 0; i < m; i++) {
      Ci,j += Ai,l * Bl,j;
    } } }
```

acc/mm/mm.c

```
:
for (j = 0; j < n; j++) {
#pragma acc loop seq
  for (l = 0; l < k; l++) {
#pragma acc loop independent
    for (i = 0; i < m; i++) {
      Ci,j += Ai,l * Bl,j;
    } } }
```

- "acc loop seq" says "never parallelize it"
  - Remember l-loop (dot prod) should be sequential
  - Actually, "no pragma" works well
- "acc loop independent" is added to i-loop
  - Nesting is ok
  - Without it, the speed is very slow!

Why Should 2 Loops be Parallelized?

In OpenACC, threads are created for iterations of parallel loops

i-loop is parallelized

- 1 thread computes 1 row

➔ We use m threads

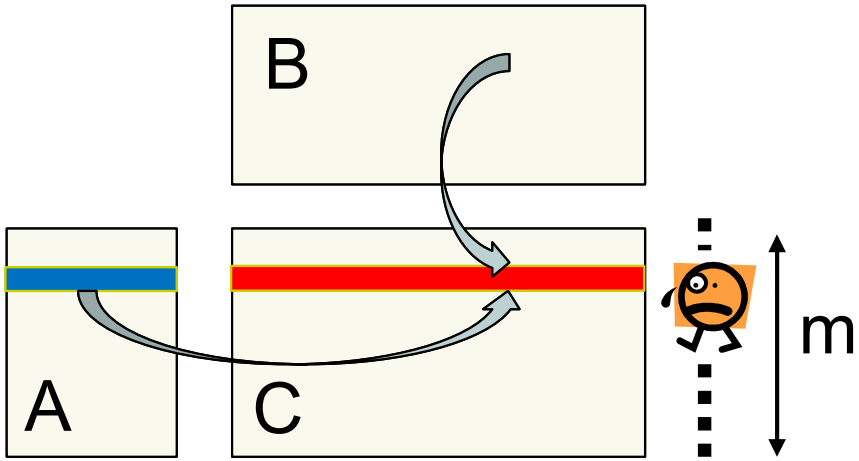

i-loop&l-loop are parallelized

- 1 thread computes 1 element

➔ We use m × n threads !!

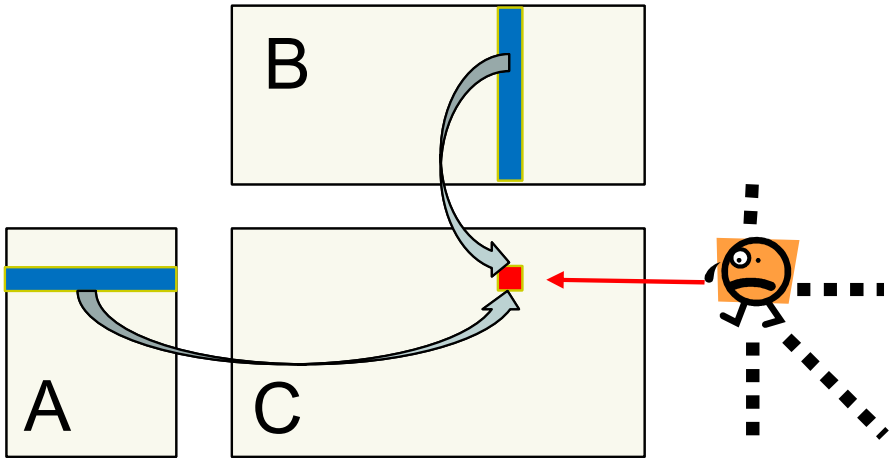

In ./mm 2000 2000 2000,

- 2000 threads are too few! 2000x2000 threads are better!

Notes on Number of Threads

- In OpenMP, the number of threads is set by OMP_NUM_THREADS
- In OpenACC, the number is automatically determined per loop

- In OpenMP, thread ID is obtained by omp_get_thread_num()
- In OpenACC, we cannot see thread ID

mm-v2: Faster Versions

- In mm
  - 3-loops are used. Loop order is JLI
  - independent, seq, independent
- In mm-v2
  - Loop order is JIL
    - It is slow in OpenMP, but fast in OpenACC
  - Independent, independent, seq
  - Also “gang, vector” option is used

OpenACC version of “pi” sample

Estimate approximation of π (circumference/diameter) by approximation of integration

- Available at ppcomp-ex/acc/pi/
- Method
  - Let SUM be approximation of the yellow area
  - 4 x SUM → π
- Execution : ./pi [n]
  - n: Number of division
  - Cf) ./pi 100000000
- Compute complexity : O(n)

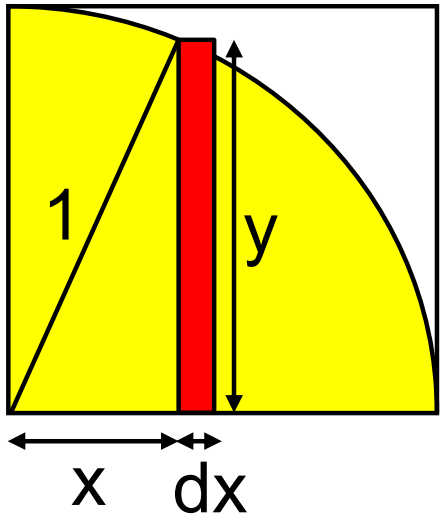

dx = 1/n
y = sqrt(1-x*x)

Algorithm of “pi”

OpenMP

```
double pi(int n) {
    int i;
    double sum = 0.0;
    double dx = 1.0 / (double)n;

#pragma omp parallel
#pragma omp for reduction(+:sum)
    for (i = 0; i < n; i++) {
        double x = (double)i * dx;
        double y = sqrt(1.0 - x*x);
        sum += dx*y;
    }

    return 4.0*sum; }
```

OpenACC

```
double pi(int n) {
    int i;
    double sum = 0.0;
    double dx = 1.0 / (double)n;

#pragma acc kernels
#pragma acc loop independent reduction(+:sum)
    for (i = 0; i < n; i++) {
        double x = (double)i * dx;
        double y = sqrt(1.0 - x*x);
        sum += dx*y;
    }

    return 4.0*sum; }
```

※ For scalar variables, “data copy” is omitted

[Optional] Submitting an OpenACC Job to TSUBAME4 Job Scheduler

- Sequential version
  - see base/mm directory

- OpenACC version
  - see acc/mm directory
  - With gpu_1 type, you can use a full GPU
  - (node_h or node_f types for multi-GPU)

base/mm/job.sh

```
#!/bin/sh
#$ -cwd
#$ -l cpu_4=1
#$ -l h_rt=00:10:00

./mm 2000 2000 2000
```

resource type and count

maximum run time

acc/mm/job.sh

```
#!/bin/sh
#$ -cwd
#$ -l gpu_1=1
#$ -l h_rt=00:10:00

./mm 2000 2000 2000
```

- Job submission
  - qsub -g tga-ppcomp job.sh

Resource Types
(from ppcomp-sup slide)

Resource type	Physical CPU cores	Memory (GB)	GPUs
node_f	192	768	4
node_h	96	384	2
node_q	48	192	1
node_o	24	96	0.5
gpu_1	8	96	1
gpu_h	4	48	0.5
cpu_160	160	368	0
cpu_80	80	184	0
cpu_40	40	92	0
cpu_16	16	36.8	0
cpu_8	8	18.4	0
cpu_4	4	9.2	0

← largest

← same size with a partition of interactive node

← smallest

0.5 GPU vs 1 GPU

./mm 2000 2000 2000

Interactive node (0.5GPU) gpu_1 (1GPU)

We can ignore speed of the first computation

Interactive node (0.5GPU)	gpu_1 (1GPU)
Matmul took 363154 us --> 44.058 GFlops	Matmul took 1816737 us --> 8.807 GFlops
Matmul took 35186 us --> 454.726 GFlops	Matmul took 20691 us --> 773.283 GFlops
Matmul took 35156 us --> 455.114 GFlops	Matmul took 20712 us --> 772.499 GFlops
Matmul took 35181 us --> 454.791 GFlops	Matmul took 20577 us --> 777.567 GFlops
Matmul took 35130 us --> 455.451 GFlops	Matmul took 20642 us --> 775.119 GFlops

About 1.7 times speedup

The first computation suffers slowdown by initialization of GPU etc.
The similar slowdown also occurs in CPU programs

Assignments in this Course

- There is homework for each part.

OMP Part	[O1] diffusion [O2] bsort [O3] qsort [O4] free	*Select 1 problem*
ACC Part	[A1] [A2] [A3] [A4]	*Select 1 problem*
CUDA Part	[C1] [C2] [C3] [C4]	*Select 1 problem*
MPI Part	[M1] [M2] [M3] [M4]	

Assignments in OpenACC Part (1)

Choose one of [A1]—[A4], and submit a report

Due date: May 14 (Thursday)

[A1] Parallelize “diffusion” sample program by OpenACC

- You can start from /ppcomp-ex/acc/diffusion

Optional：

- To make array sizes variable parameters
- To compare OpenACC vs OpenMP on CPU
- To improve performance further

Assignments in OpenACC Part (2)

[A2] Parallelize “bsort” sample program by OpenACC

- You can start from /ppcomp-ex/acc/bsort

Optional：

- Comparison with other sort algorithms
  - Heap sort, Merge sort, …
  - Quick sort (qsort) ?
- Comparison with CPU (OpenMP) version

Assignments in OpenACC Part (3)

[A3] Evaluate speed of “acc/mm” sample in detail

ppcomp-ex/acc/mm/

- Use various matrices sizes
- Evaluate effects of data transfer cost
- Compare with CPU (OpenMP) version

Optional：

- Use different loop options
- Use different loop orders. See acc/mm-v2/
- Change/improve the program more
  - Cache blocking?

Assignments in OpenACC Part (4)

[A4] (Freestyle) Parallelize *any* program by OpenACC

- cf) A problem related to your research
- Challenging one for parallelization is better
  - cf) Partial computations have dependency with each other

Notes in Report Submission (1)

- Submit the followings via LMS

  (1) A report document
  - PDF, MS-Word or text file
  - 2 pages or more
  - in English or Japanese (日本語もok)

  (2) Source code files of your program
  - Try “zip” to submit multiple files

Notes in Report Submission (2)

The report document should include:

- Which problem you have chosen
- How you parallelized
  - It is even better if you mention efforts for high performance or new functions
- Performance evaluation on TSUBAME
  - With varying number of threads
  - With varying problem sizes
  - Discussion with your findings
  - Other machines than TSUBAME are ok, if available

Plan of Part 2 (OpenACC)

- No. 1 (Today)
  - Introduction to OpenACC
- No. 2 (May 7)
  - Improving data copy
  - Improving loop parallelization

- Note: Due date of Part 1 report is May 7