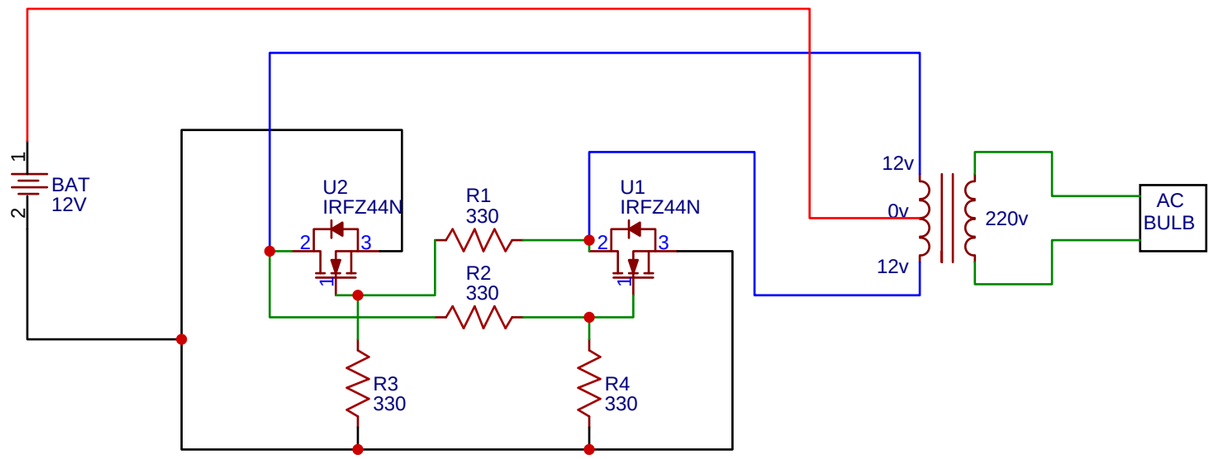

TITLE: Simple Inverter		REV: 1.0
EasyEDA	Company: Creative Projects	Sheet: 1/1
	Date: 2024-09-22 Drawn By: Towsif Aktar	