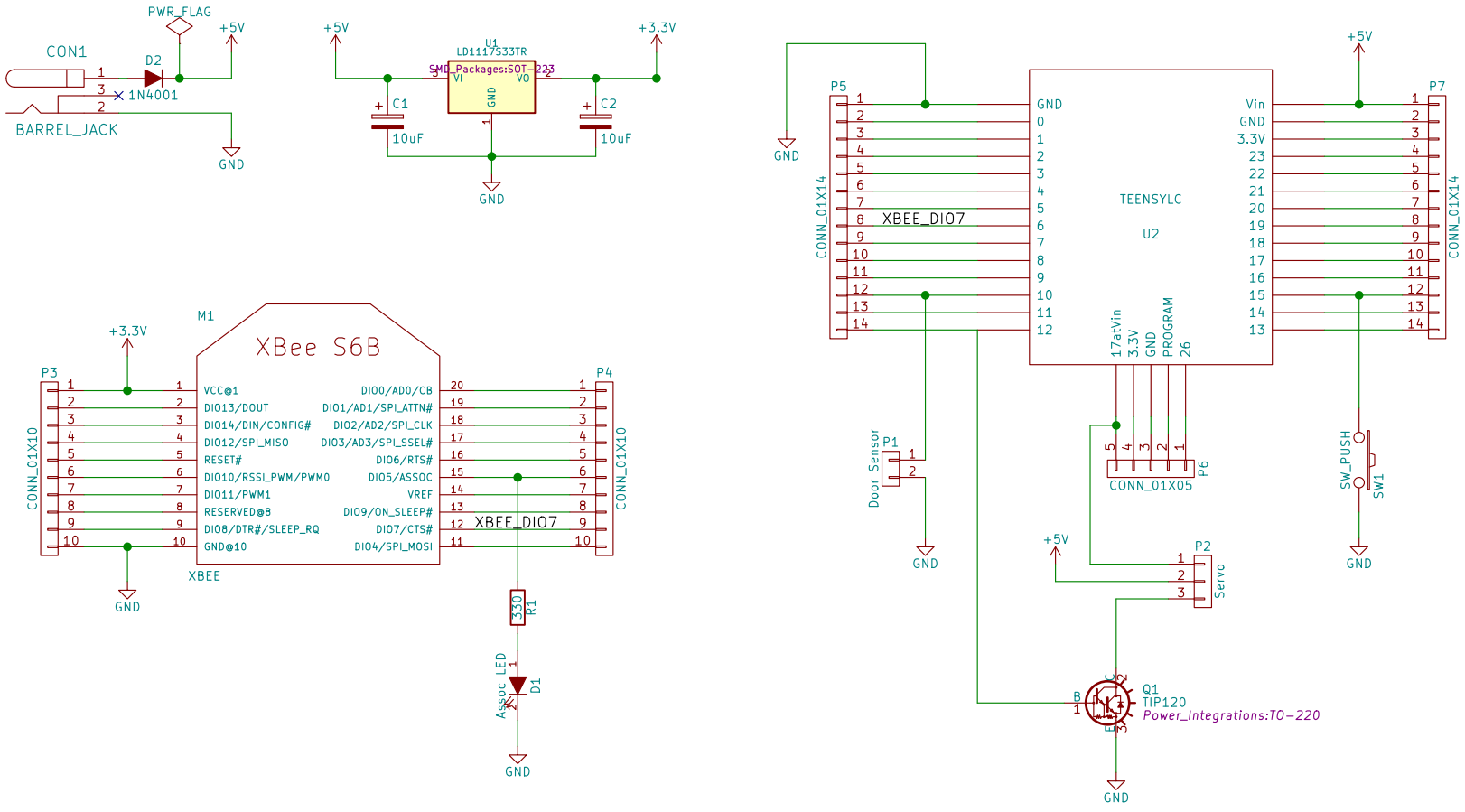

Sheet: /
File: dogcage.sch

Title:

Size: A4	Date:	**Rev:**
KiCad E.D.A. kicad (2015-04-09 BZR 5588)-product		Id: 1/1