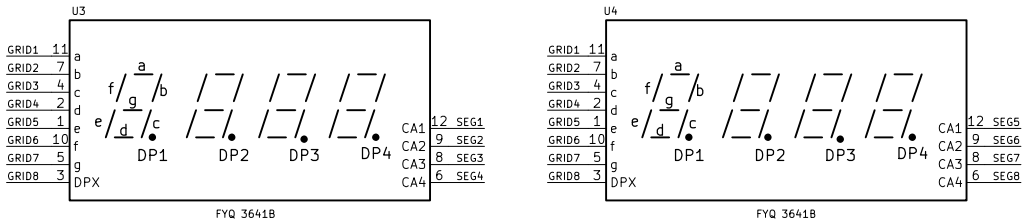

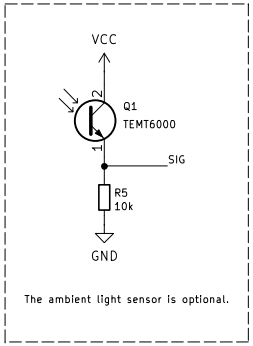

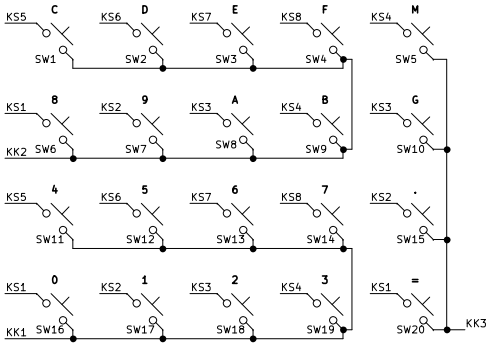

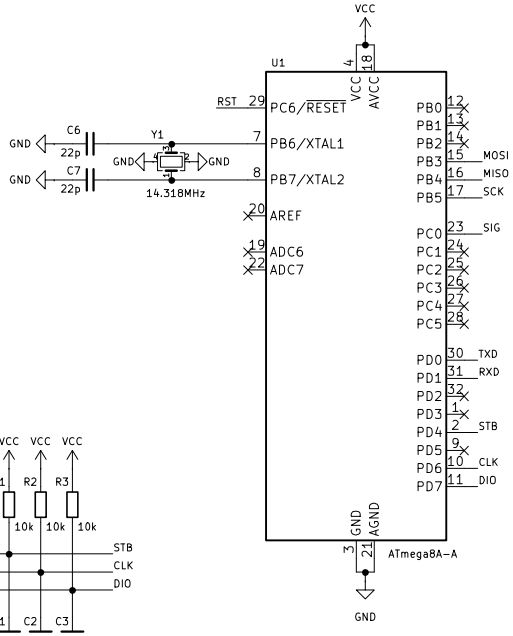

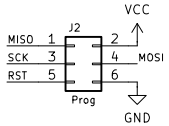

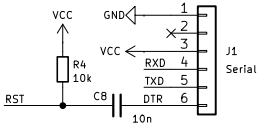

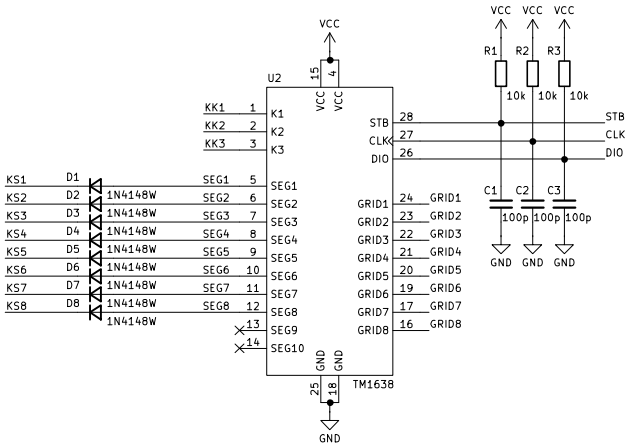

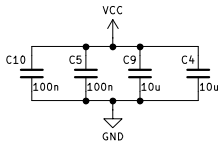

Hexadecimal keypad with LED display

Tadeusz Pycio

Sheet: /

File: Keypad.kicad_sch

Title: Hex Terminal

Size: A4	Date:	**Rev: 1.0**
KiCad E.D.A. 8.0.6		Id: 1/1