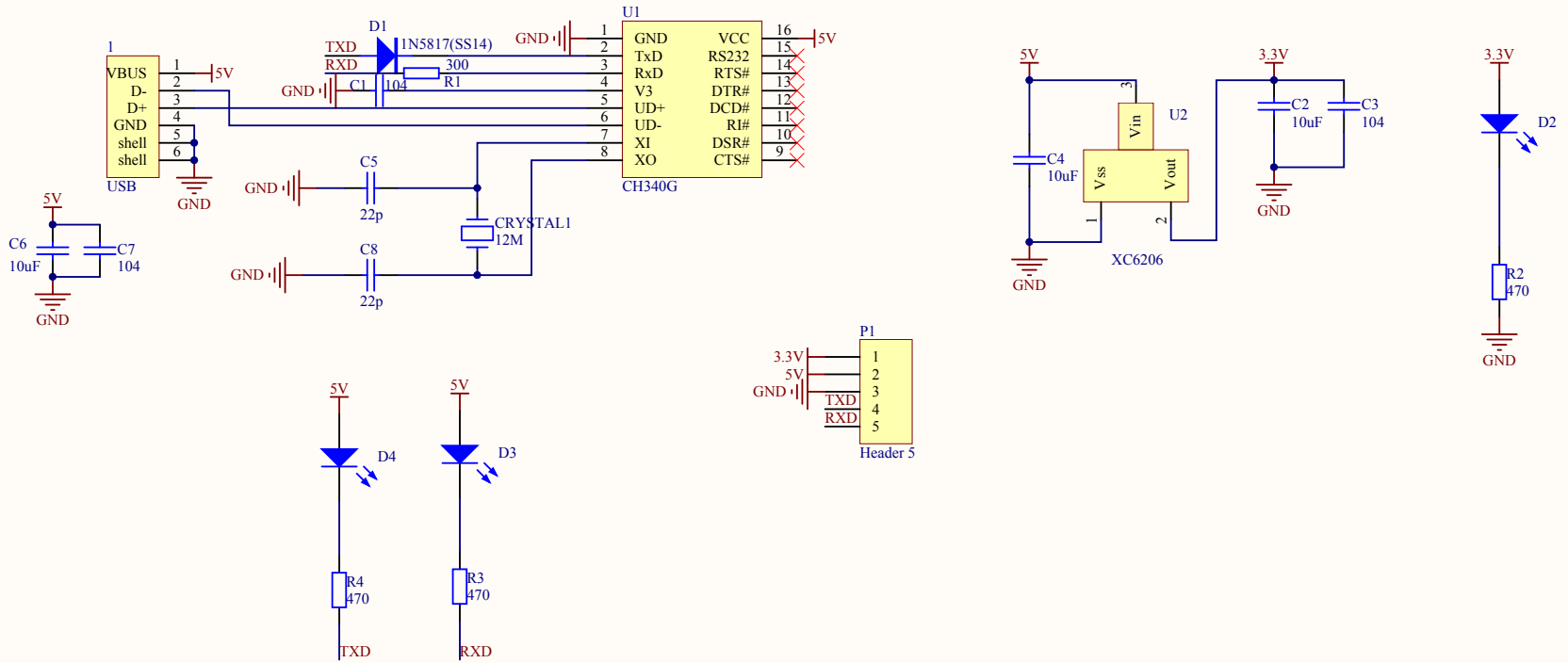


| Title | | |
|---|---|---|
| Size A4 | Number | Revision |
| Date: 2015/7/31 | | Sheet of |
| File: H:\ \..\CH340G .SchDoc | | Drawn By: |