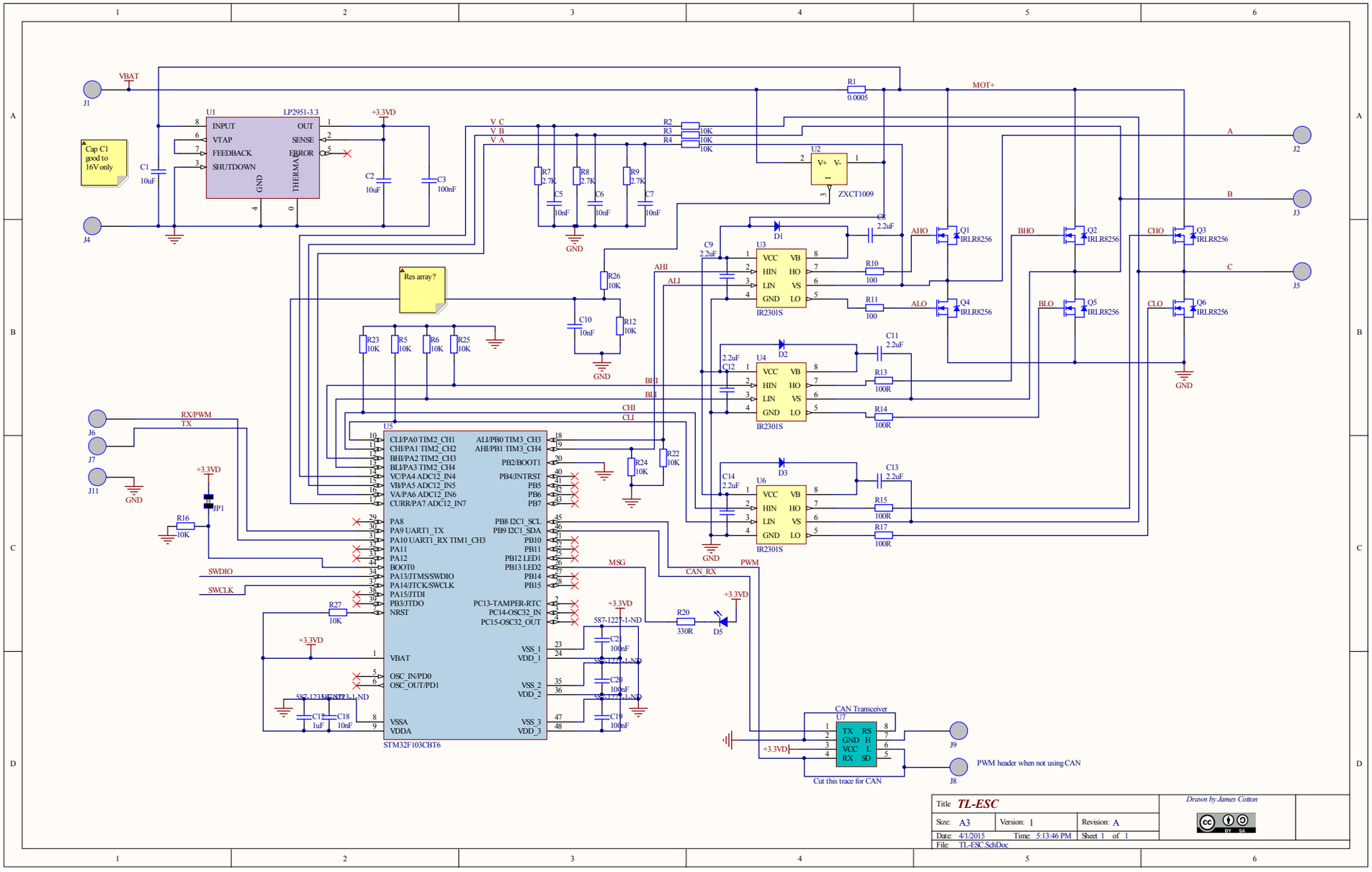
VBAT
J1
J4
U1
LP2951-3.3
INPUT
VTAP
FEEDBACK
SHUTDOWN
OUT
SENSE
ERROR
GND
THERMAL
Cap C1 good to 16V only
C1 10uF
C2 10uF
C3 100nF
+3.3VD
V C
V B
V A
R1 0.0005
MOT+
R2 10K
R3 10K
R4 10K
R7 2.7K
R8 2.7K
R9 2.7K
C5 10nF
C6 10nF
C7 10nF
U2
V+
V-
ZXCT1009
J2
J3
J5
A
B
C
D1
D2
D3
C8 2.2uF
C9 2.2uF
C11 2.2uF
C12 2.2uF
C13 2.2uF
C14 2.2uF
U3
U4
U6
VCC
HIN
LIN
GND
VB
HO
VS
LO
IR2301S
AHO
ALO
BHO
BLO
CHO
CLO
Q1 IRLR8256
Q2 IRLR8256
Q3 IRLR8256
Q4 IRLR8256
Q5 IRLR8256
Q6 IRLR8256
R10 100
R11 100
R13 100R
R14 100R
R15 100R
R17 100R
AHI
ALI
BHI
BLI
CHI
CLI
Res array?
R26 10K
C10 10nF
R12 10K
R23 10K
R5 10K
R6 10K
R25 10K
R22 10K
R24 10K
RX/PWM
TX
J6
J7
J11
U5
STM32F103CBT6
CL1/PA0/TIM2_CH1
CH1/PA1 TIM2_CH2
BH1/PA2 TIM2_CH3
BL1/PA3 TIM2_CH4
VC/PA4 ADC12_IN4
VB/PA5 ADC12_IN5
VA/PA6 ADC12_IN6
CURR/PA7 ADC12_IN7
PA8
PA9 UART1_TX
PA10 UART1_RX TIM1_CH3
PA11
PA12
BOOT0
PA13/JTMS/SWDIO
PA14/JTCK/SWCLK
PA15/JTDI
PB3/JTDO
NRST
OSC_IN/PD0
OSC_OUT/PD1
VBAT
VSSA
VDDA
AL1/PB0 TIM3_CH3
AH1/PB1 TIM3_CH4
PB2/BOOT1
PB4/JNTRST
PB5
PB6
PB7
PB8 I2C1_SCL
PB9 I2C1_SDA
PB10
PB11
PB12 LED1
PB13 LED2
PB14
PB15
PC13-TAMPER-RTC
PC14-OSC32_IN
PC15-OSC32_OUT
VSS_1
VDD_1
VSS_2
VDD_2
VSS_3
VDD_3
SWDIO
SWCLK
JP1
R16 10K
R27 10K
C12 1uF
C18 10nF
587-1223-1-ND
C21 100nF
C20 100nF
C19 100nF
587-1227-1-ND
MSG
CAN_RX
PWM
R20 330R
D5
CAN Transceiver
U7
TX
GND
VCC
RX
RS
H
L
SD
J9
J8
PWM header when not using CAN
Cut this trace for CAN
Title TL-ESC
Size: A3
Version: 1
Revision: A
Date: 4/1/2015
Time: 5:13:46 PM
Sheet 1 of 1
File: TL-ESC.SchDoc
Drawn by James Cotton

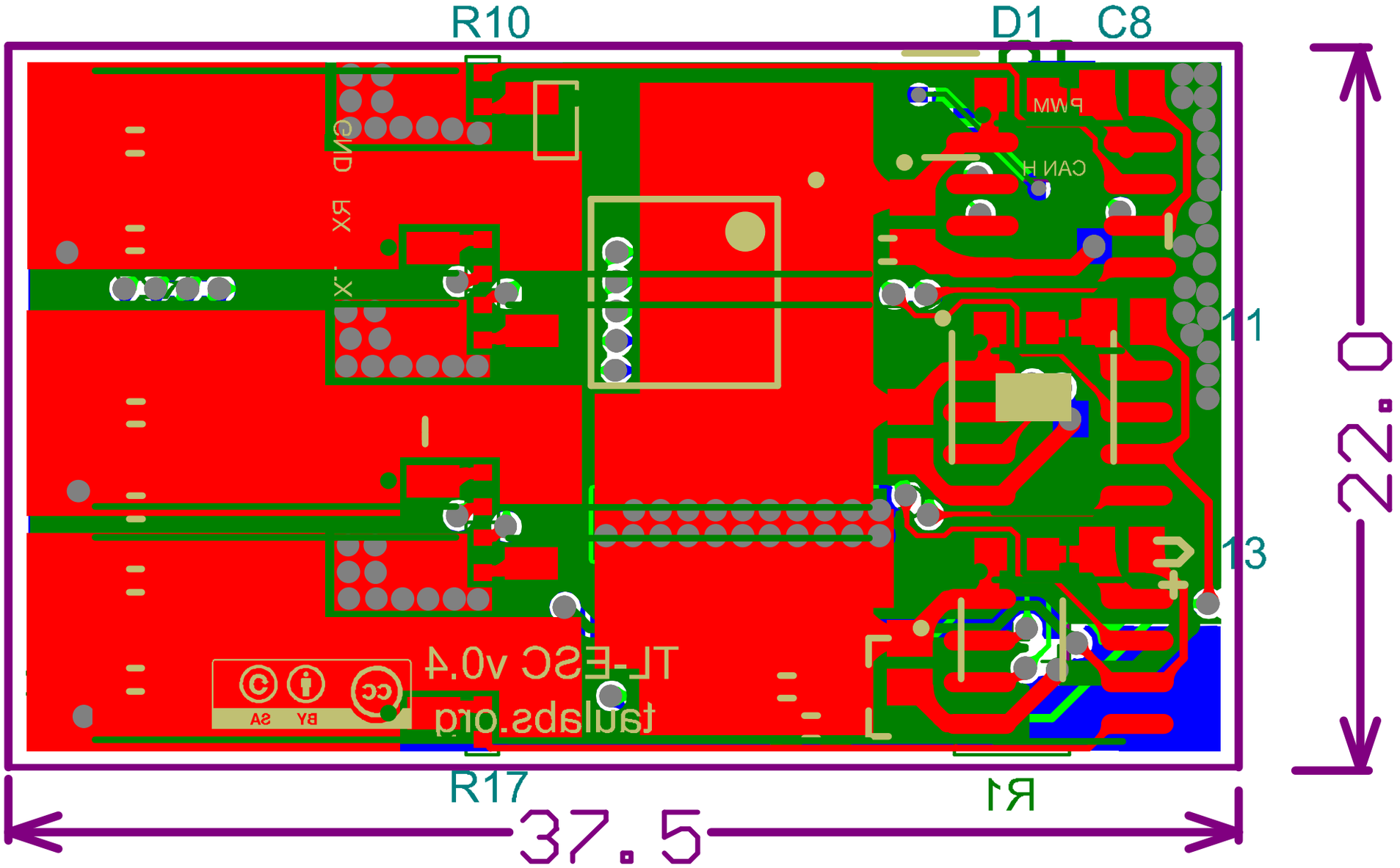
R10
D1
C8
PWM
CAN H
GND
RX
TX
11
13
TL-ESC v0.4
tualabs.org
R17
R1
37.5
22.0