1 Cover Page.SchDoc

AK MCU KIT 2.3- STM32L151

Page	Index
1	COVER PAGE (this page)
2	BLOCK DIAGRAM
3	POWER
4	RS485
5	LCD
6	CONNECTORS
7	MCU
8	REVISION HISTORY

View Top Side

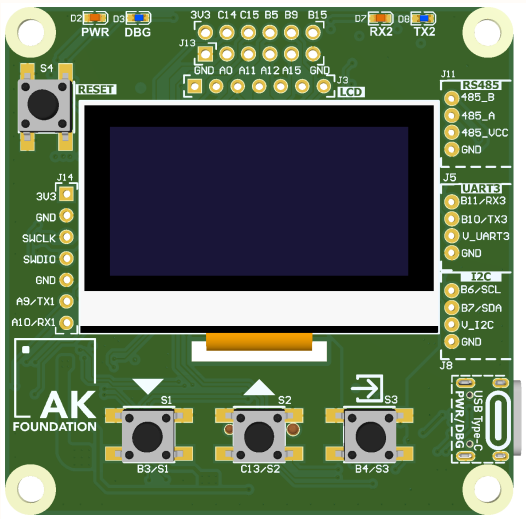

View Bottom Side

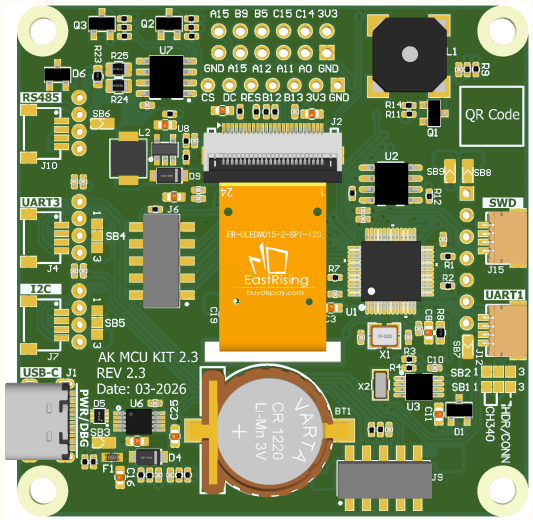

PCB Dimensions: 60*60mm

PCB Thickness: 1.6mm

AK MCU KIT 2.3		
Title: AK MCU KIT 2I3_B.PrjPcb		
Page Contents: Cover page		
Size: A3	DWG NO	Revision: Rev A
Date: 08/2024	Sheet 1 of 8	

2 Block Diagram.SchDoc

View Top Side

[1]	MCU Reset button
[2][3]	LED Power, LED Debug
[4]	MCU Pinout
[5][6]	RS485 LED TX,RX
[7]	Grove RS485
[8]	Grove UART3
[9]	Grove I2C
[10][11][12]	User button switch
[13]	Debug Header 2.54mm
[14]	LCD Oled 1.54" SSD1309

View Bottom Side

[15]	Qwiic RS485
[16]	Qwiic UART3
[17]	Qwiic I2C
[18]	USB Type-C Console & Power
[19][21]	Connector for Expansion Board
[20]	CR1220 Battery for RTC
[23][25]	Qwiic Debug connector
[10][11][12]	User button switch
[24]	MCU STM32L
[26]	NOR FLASH
[27]	Buzzer
[22][27][29]	Solder Jumper

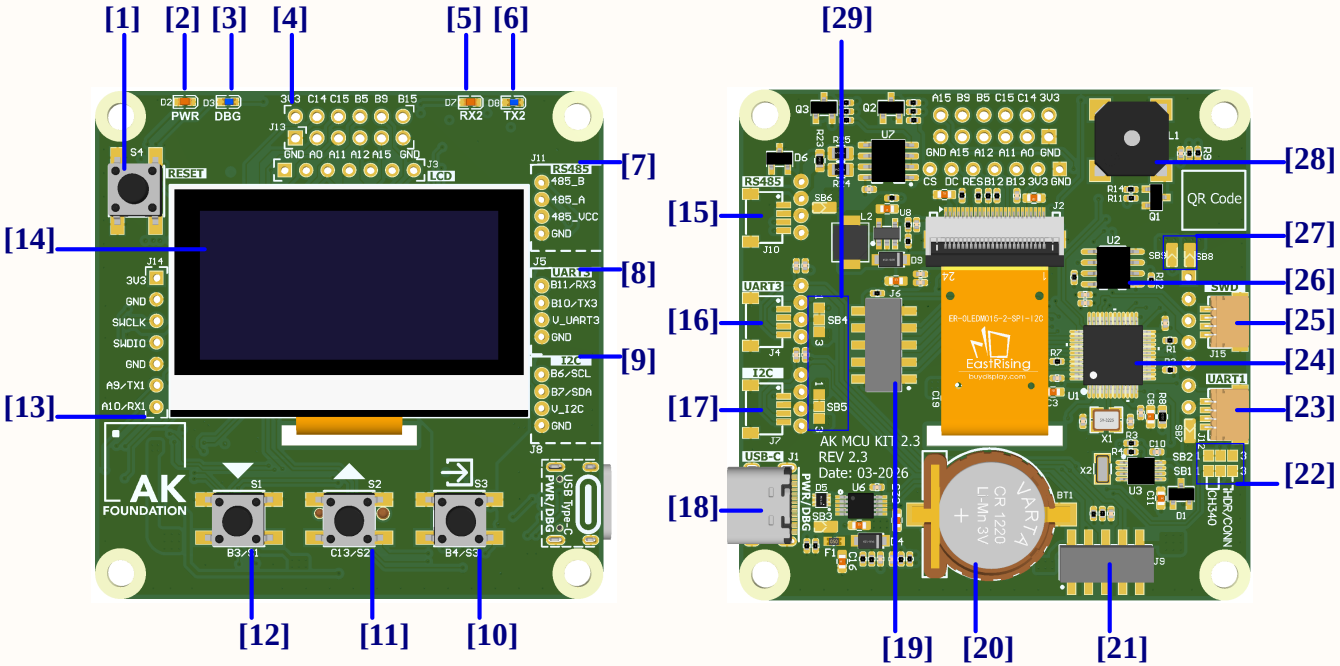

AK MCU KIT 2.3	
Title:	AK MCU KIT 2I3_B.PrjPcb
Page Contents:	Block Daigram
Size: A3	DWG NO / Revision: Rev A
Date: 4/25/2026	Sheet 2 of 8

3 Power.SchDoc

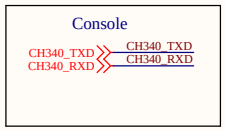

Power Tree

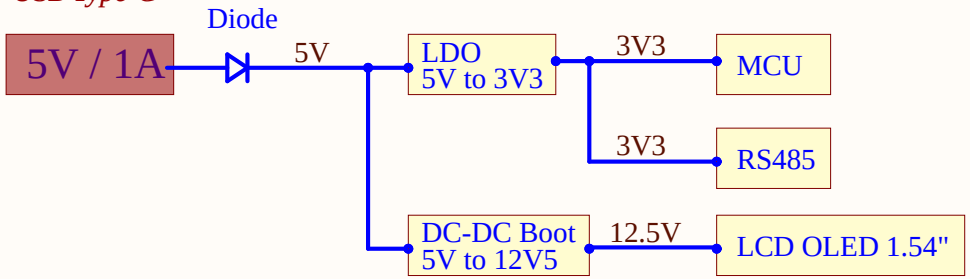

USB Type C

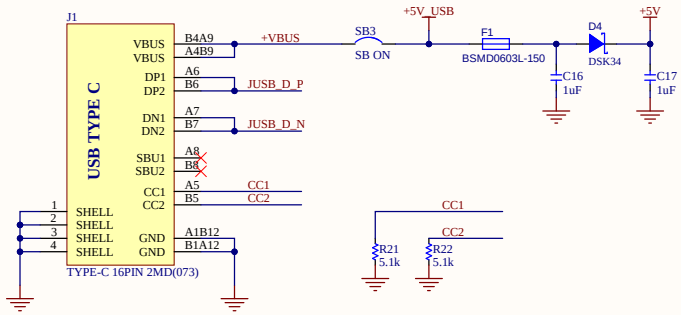

5v to 3v3@100mA MCU

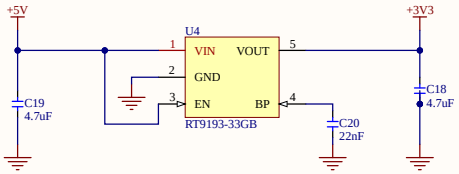

CH340E USB to TTL Console

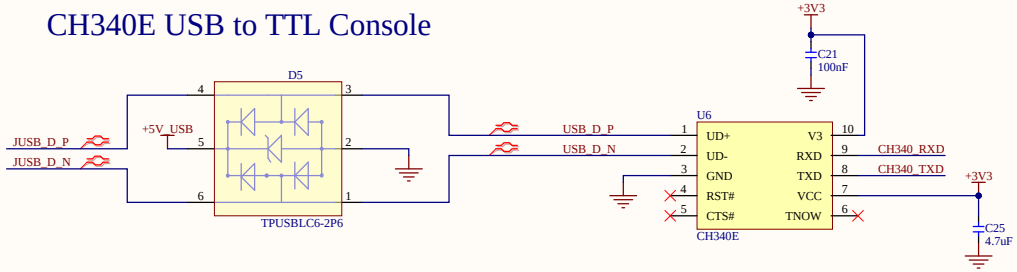

CH340 Power Use 3V3 System

3.2 mm non-plated mounting hole for M3 screw

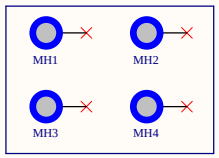

Logo AK

Logo USB-Type-C

AK MCU KIT 2.3	
Title: AK MCU KIT 2I3_B.PrjPcb	
Page Contents: Power	
Size:	DWG NO	Revision: Rev A
Date: 11:33:17 PM 4/25/2026	Sheet 3 of 8

4 RS485.SchDoc

[4][7]RS485

RS485_TX — RS485_TX
RS485_RX — RS485_RX
RS485_DIR — RS485_DIR

[4][6]RS485

RS485_A — RS485_A
RS485_B — RS485_B

RS-485 Transceiver (MCU USART2)

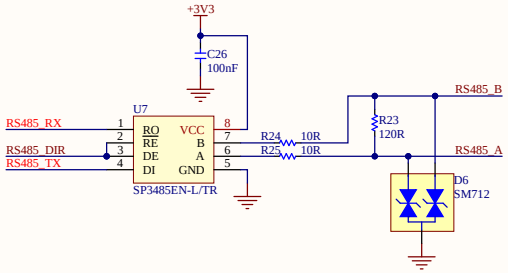

RS485 TX,RX LED Indicator

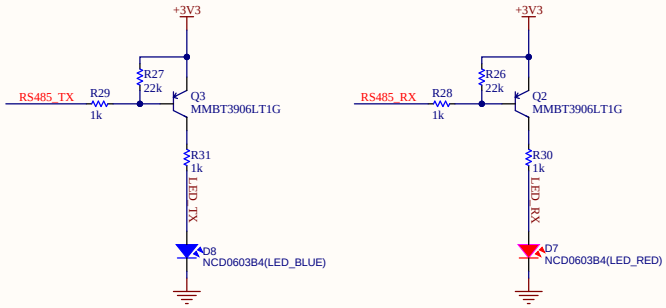

AK FOUNDATION

AK MCU KIT 2.3	
Title:	AK MCU KIT 2I3_B.PrjPcb
Page Contents:	RS485
Size:	DWG NO / Revision: Rev A
Date: 11:33:17 PM 4/25/2026	Sheet 4 of 8

5 LCD.SchDoc

[5][7]LCD

LCD_SDA — LCD_SDA
LCD_SCL — LCD_SCL
PA15 — PA15

FPC 24pin Contacts Top and Bottom (LCD Contact Top)

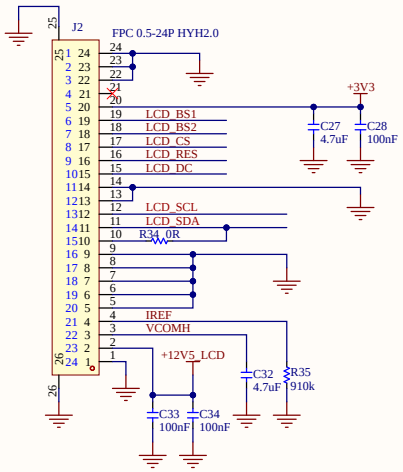

1.54inch LCD OLED - Driver SSD1309

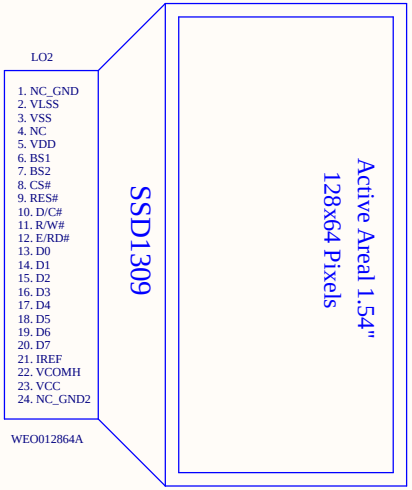

12.5V Boost Supply for OLED Panel

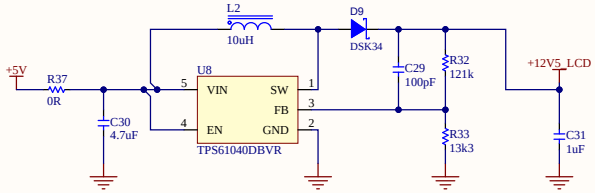

Header 2.54 1*7 (OLED_LCD pinout)

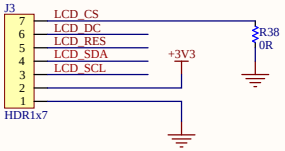

BS1 to VCC, BS2 to GND : I2C mode

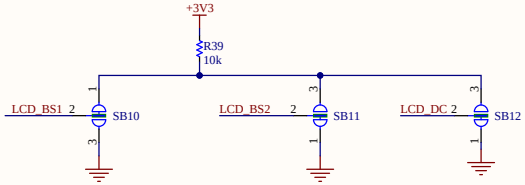

D/C tied to GND (I2C mode)

I2C Address: 0x3C

LCD Reset

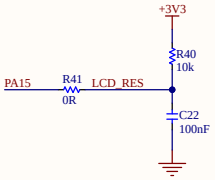

AK FOUNDATION

AK MCU KIT 2.3	
Title: AK MCU KIT 2I3_B.PrjPcb	
Page Contents: LCD	
Size:	DWG NO * / Revision: Rev A
Date: 11:33:17 PM 4/25/2026	Sheet 5 of 8

6 Connectors.SchDoc

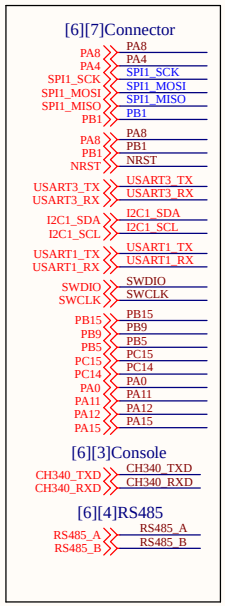

Qwiic connector 1.0mm(SparkFun)

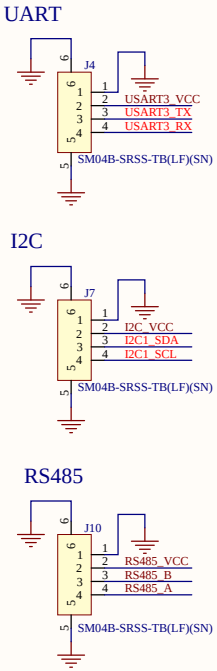

Grove connector 2.0mm(Seeed Studio)

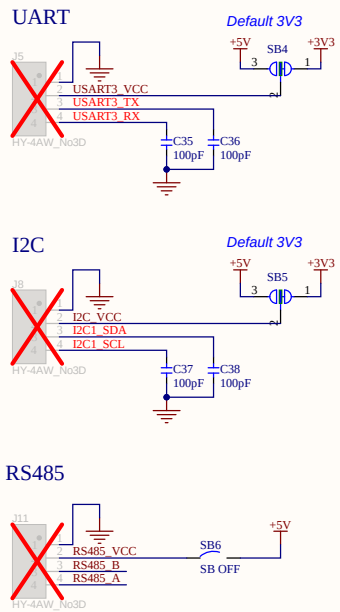

Connector for Expansion Board

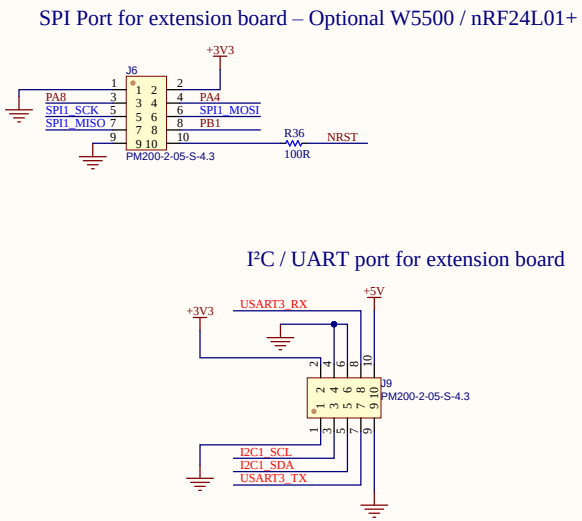

Debug Connector

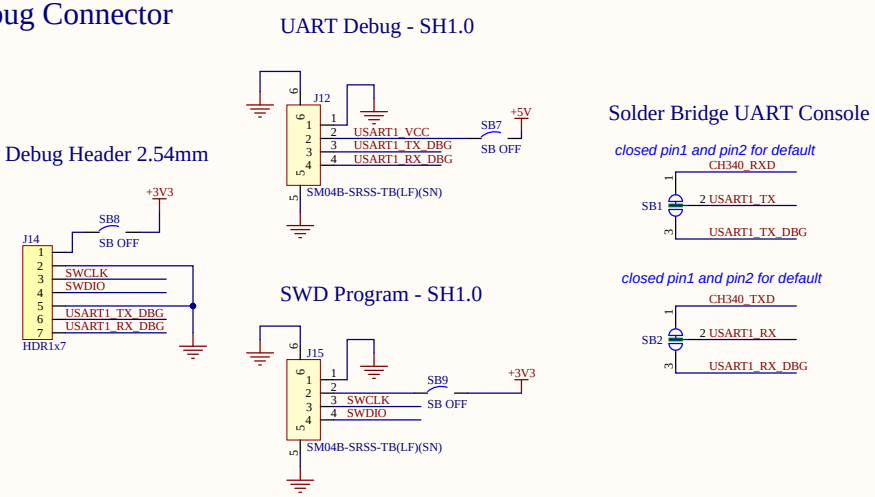

MCU Pinout 2.54mm 2*6 pin

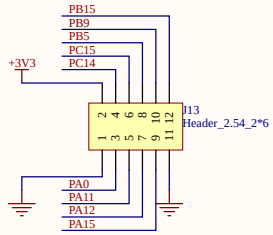

AK FOUNDATION

AK MCU KIT 2.3		
Title: AK MCU KIT 2I3_B.PrjPcb		
Page Contents: Connectors		
Size:	DWG NO *	Revision: Rev A
Date: 11:33:17 PM 4/25/2026	Sheet 6 of 8	

7 MCU.SchDoc

[7][4]RS485
RS485_TX — RS485_TX
RS485_RX — RS485_RX
RS485_DIR — RS485_DIR

[7][5]LCD
LCD_SDA — LCD_SDA
LCD_SCL — LCD_SCL
PA15 — PA15

[7][6]Connector
PA8 — PA8
PA4 — PA4
SPI1_SCK — SPI1_SCK
SPI1_MOSI — SPI1_MOSI
SPI1_MISO — SPI1_MISO
PB1 — PB1
PA8 — PA8
PB1 — PB1
NRST — NRST
USART3_TX — USART3_TX
USART3_RX — USART3_RX
I2C1_SDA — I2C1_SDA
I2C1_SCL — I2C1_SCL
USART1_TX — USART1_TX
USART1_RX — USART1_RX
SWDIO — SWDIO
SWCLK — SWCLK
PB15 — PB15
PB9 — PB9
PB5 — PB5
PC15 — PC15
PC14 — PC14
PA0 — PA0
PA11 — PA11
PA12 — PA12

STM32L151CBT6

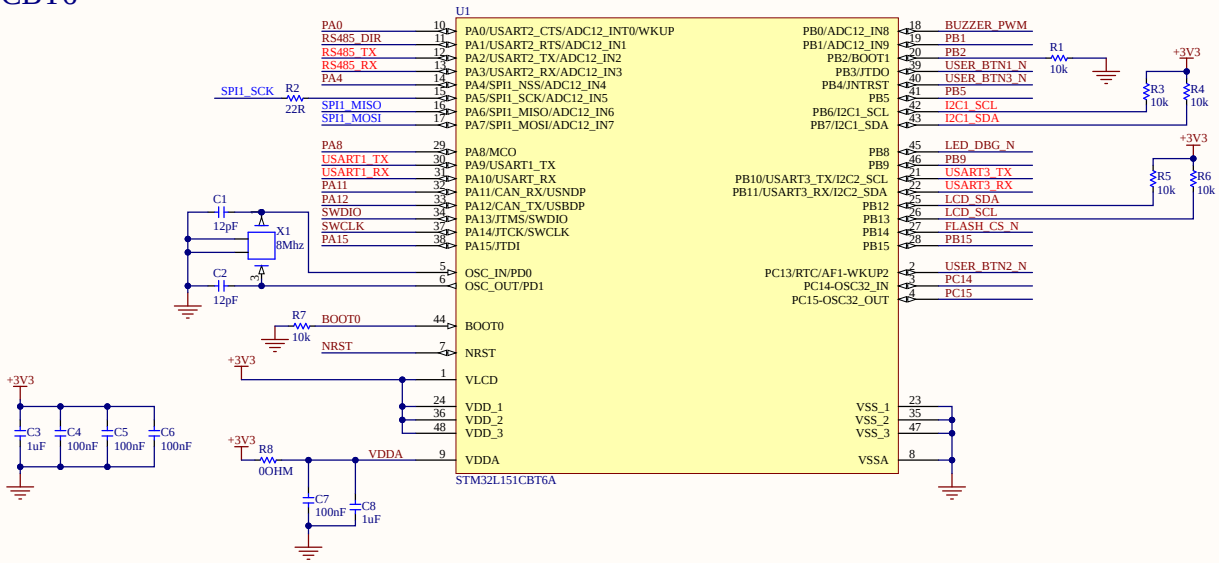

Led & Buzzer

LED Power (Red)

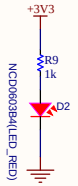

LED Debug (Blue)

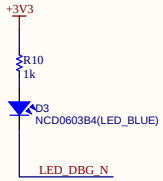

Buzzer PWM

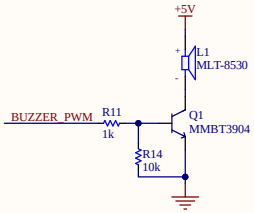

RTC PCF85063

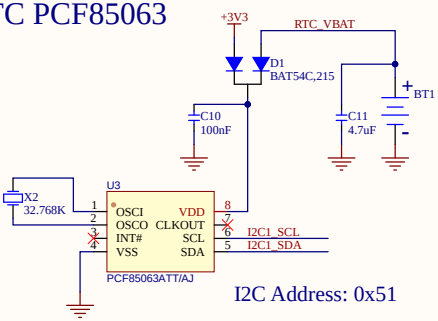

I2C Address: 0x51

NOR Flash

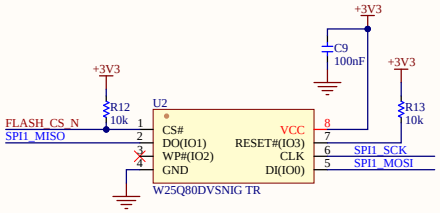

Button

User Button

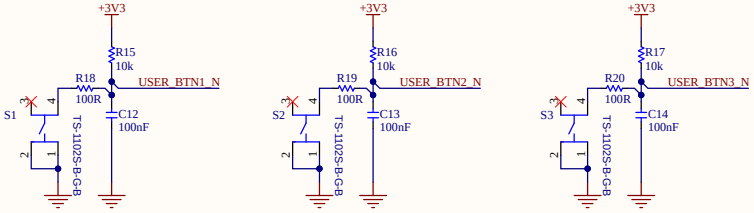

MCU Reset Button

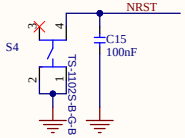

AK FOUNDATION

	AK MCU KIT 2.3
Title:	AK MCU KIT 2I3_B.PrjPcb
Page Contents:	MCU
Size:	DWG NO *
Revision:	Rev A
Date:	11:33:17 PM 4/25/2026
Sheet	7 of 8

8 Revision History.SchDoc

Revision

Rev #	Date	Originator	Rev Iteam ID	Description
Version 2.3 Rev A	10-March-2026	AnhHH	1 2 3	Initial Release DVT JLC Design for Manufacturing Hand-soldered wire jumper added between PA15 and LCD_RES
Version 2.3 Rev B	25-April-2026	AnhHH	1	Connect LCD_RES to PA15 via 0 ohm resistor Add RC 10k pull-up and 100nF capacitor on net LCD_RES

AK FOUNDATION

AK MCU KIT 2.3		
Title: AK MCU KIT 2I3_B.PrjPcb		
Page Contents: Revision History		
Size: A3	DWG NO Hoang anh	Revision: Rev A
Date: 4/25/2026		Sheet 8 of 8

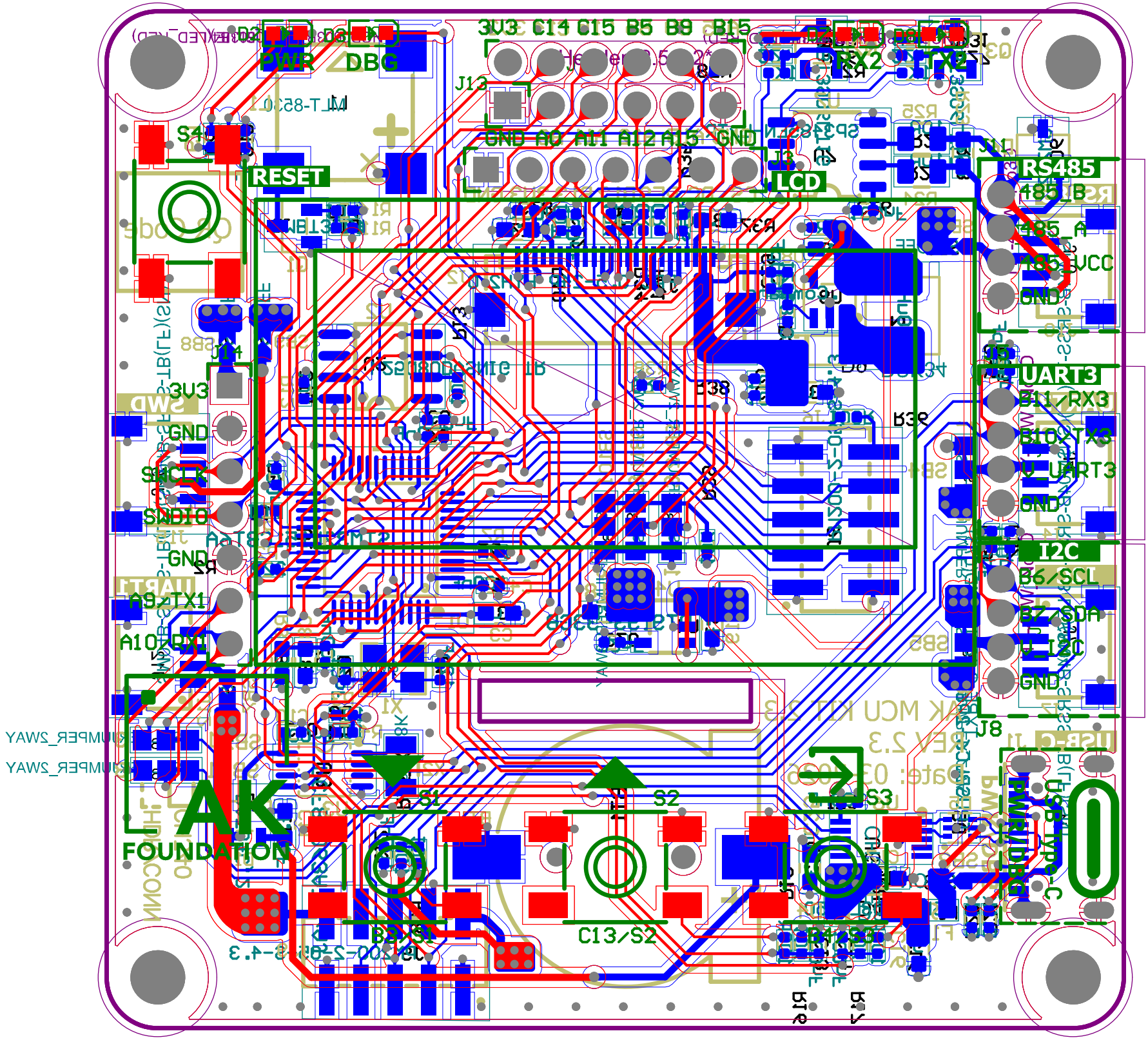
PWR
DBG
3V3 C14 C15 B5 B9 B15
RX2
TX2
GND A0 A1 A2 A15 GND
RESET
LCD
RS485
485_B
485_A
485_VCC
GND
UART3
B11/RX3
B10/TX3
U_UART3
GND
I2C
B6/SCL
B7/SDA
U_I2C
GND
3V3
GND
SWCLK
SWDIO
GND
A9/TX1
A10/RX1
S1
S2
S3
C13/S2
AK
FOUNDATION