Aalto University
School of Electrical
Engineering

ELEC-E8126 Robotic Manipulation Introduction

Ville Kyrki

12.1.2026

Today

- Course arrangements (see another slide set)
- Quick overview of course contents
- Re-cap of many things

Typical advanced manipulation pipeline

Perception

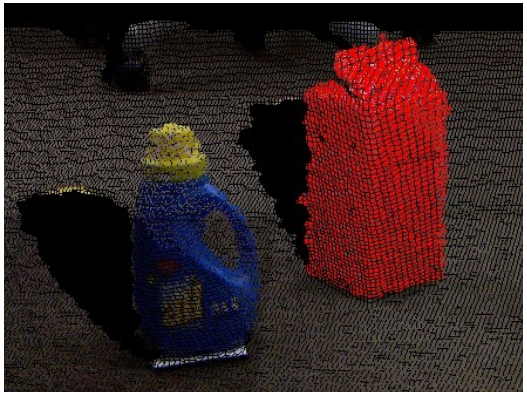

Understanding the world around the robot.

Planning

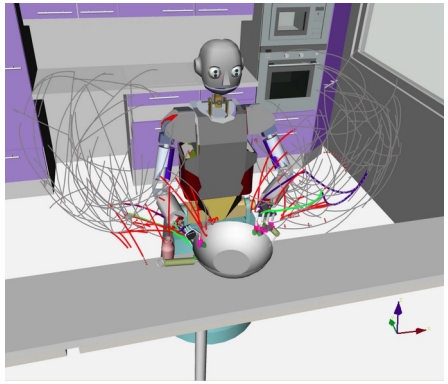

Creating the sequence of actions for the task.

Control / Execution

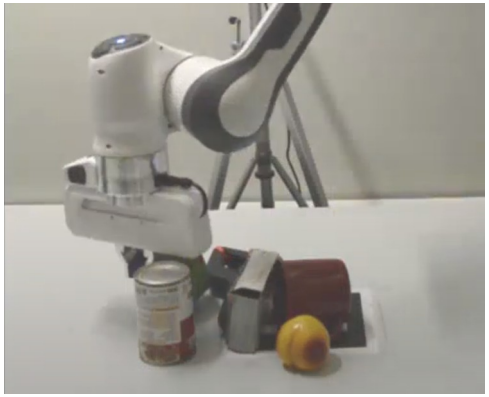

Executing the actions with sensor feedback.

Perception

- Primarily: Detection of target objects and obstacles

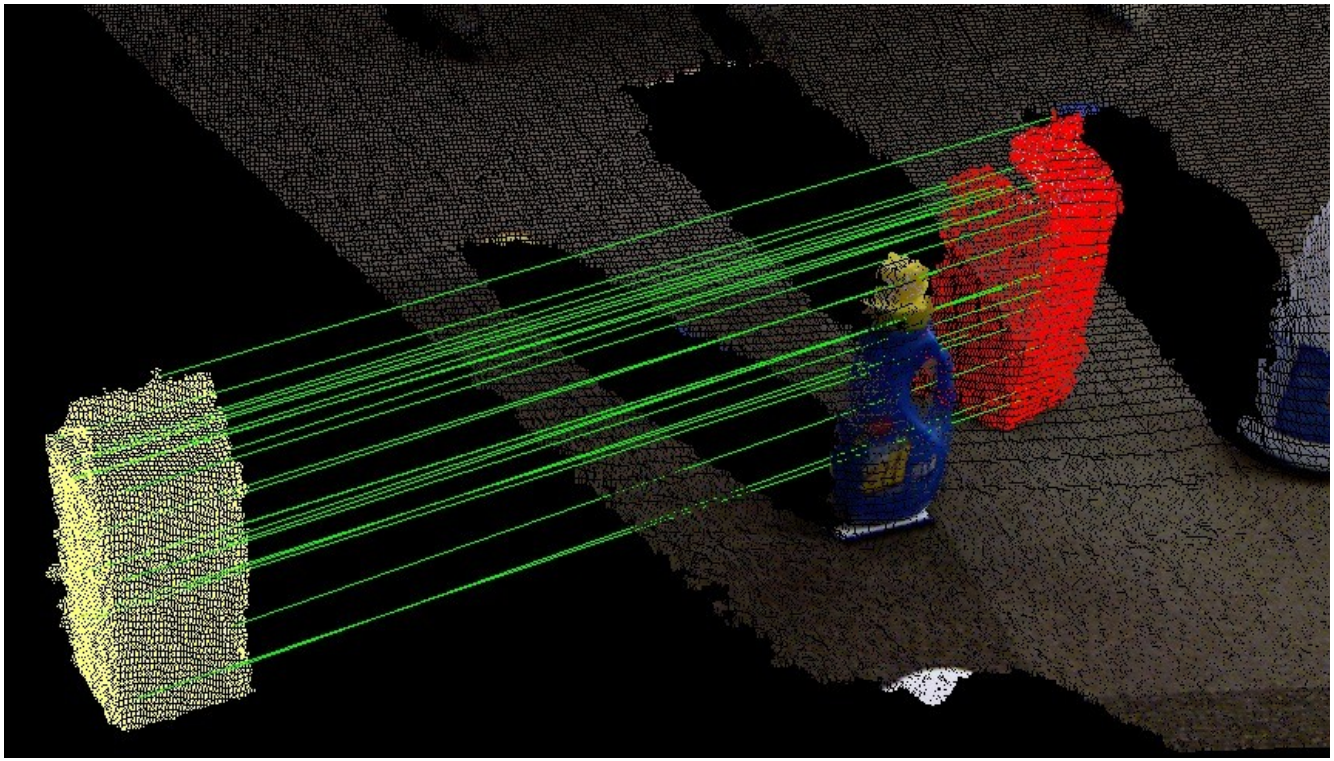

Planning problems in manipulation

- How a robot can re-arrange objects surrounding it in order to reach a particular goal? E.g. complete an assembly.
  - Mixture of mechanics and planning (synthesis)

- Hierarchy of techniques: (for finding a sequence of actions)
  - Kinematic manipulation: Based on kinematics. E.g. how to move joints to move from a start to end position without collisions. *Lecture 2.*
  - Static manipulation: Based on statics and kinematics. E.g. how to place an object at rest on a table.
  - Quasi-static manipulation: Kinematics, statics, dynamics without inertia. E.g. grasping stably. *Lectures 5-6.*
  - Dynamic manipulation: Kinematics, statics, dynamics. E.g. throwing an object.

Control problems in manipulation

- How to move along a trajectory?
- How to perform several simultaneous tasks? *Lecture 3*
  - E.g. avoid obstacles while moving
- How to perform in-contact motions? *Lecture 3*
- How to perform coordinated motions with several manipulators? *Lecture 8*

Towards state-of-the-art

- Manipulation with multiple manipulators simultaneously *Lecture 9*

- Modeling and learning manipulation skills *Lecture 10*

Re-cap: Coordinate frames and transforms

- Coordinate frame *{a}* can be represented as a 4x4 matrix consisting of translation and rotation

3x3 rotation matrix

3x1 translation vector

May be omitted for "space"/"world" frame

$$T_{sa} = \begin{pmatrix} R & p \\ 0 & 1 \end{pmatrix} \in SE(3)$$

Special Euclidean group

reference frame

frame name

- May also be used to change reference frame of a position vector or frame. $T_{sb} = T_{sa} T_{ab} \quad x_b = T_{ba} x_a$

Can reference frame change be done for velocity vectors?

Other representations for rotation?

Exponential coordinates for rotation

- Any rotation can be obtained from *I* by rotating it by some θ about axis $\hat{\omega}$ (axis-angle representation)
- Can be combined to $\hat{\omega}\theta \in \mathbb{R}^3$ called exponential coordinates for rotation

- What's the relationship between exponential coordinates and rotation matrix?

Rotations form the special orthogonal group SO(3).

$R \in SO(3)$

Exponential coordinates cont'd

- Velocity of a point in rotation

Angular velocity

$$\dot{p} = \hat{\omega} \times p$$

$$\dot{p} = [\hat{\omega}]\, p$$

$$[x] = \begin{pmatrix} 0 & -x_3 & x_2 \\ x_3 & 0 & -x_1 \\ -x_2 & x_1 & 0 \end{pmatrix}$$

Solution?

$$\dot{x} = a\, x$$

$$x(t) = e^{at}\, x(0)$$

Exponential coordinates cont'd

- Solution to previous

$$\dot{p} = [\hat{\omega}]\, p$$
$$p(t) = e^{[\hat{\omega}]t}\, p(0)$$

Rotation matrix

$$[\hat{\omega}]\,\theta = [\hat{\omega}\,\theta] = \log R \qquad R = e^{[\hat{\omega}]\,\theta}$$

- Rodrigues' formula

$$R(\hat{\omega}, \theta) = e^{[\hat{\omega}]\theta} = I + \sin\theta\,[\hat{\omega}] + (1 - \cos\theta)\,[\hat{\omega}]^2$$

For logarithm, see Lynch&Park

Spatial velocity

- Similar to angular velocity, we can define spatial velocity as *twist*

$$V = \begin{pmatrix} \omega \\ v \end{pmatrix} \in \mathbb{R}^6$$

translational velocity

- Let's define skew-operator for twist as

$$[V] = \begin{pmatrix} [\omega] & v \\ 0 & 0 \end{pmatrix} \in se(3)$$

- Transform between frames

$$V_a = \underbrace{\begin{pmatrix} R_{ab} & 0 \\ [p_{ab}]R_{ab} & R_{ab} \end{pmatrix}}_{Ad_{T_{ab}}} V_b = [Ad_{T_{ab}}] V_b$$

Adjoint representation of T $[Ad_T]$

Exponential coordinates of rigid-body motion

- To define unique twist, let us define *screw axis S*

$$S = \begin{pmatrix} \omega \\ v \end{pmatrix} \in \mathbb{R}^6$$

such that $\|\omega\| = 1 \quad or \quad \|v\| = 1, \|\omega\| = 0$

- Analogous to rotations, we can then define exponential coordinates for rigid-body motions

$$[S]\theta = \log T \in se(3) \qquad T = e^{[S]\theta} \in SE(3)$$

For formulas, see Lynch&Park

Wrenches

- We can define a similar representation for linear forces acting on the rigid body.
- The 6-dimensional combination of moment and force is called a **wrench**

$$F = \begin{pmatrix} m \\ f \end{pmatrix} \in \mathbb{R}^6$$

- Coordinate frame for wrenches can be changed using the adjoint

$$F_b = Ad_{T_{ab}}^T F_a$$

Note: There is transpose here, unlike the previous case.

Re-cap: Forward kinematics

- Forward kinamatics is mapping from joint values to end-effector pose
- Forward kinematics of serial chain can be obtained from product of transformation matrices

$$T_{04} = T_{01} T_{12} T_{23} T_{34}$$

- Forward kinematics can also be expressed as product of exponentials

$$T(\theta) = e^{[S_1]\theta_1} \cdots e^{[S_N]\theta_N} M$$

End-effector pose at zero position

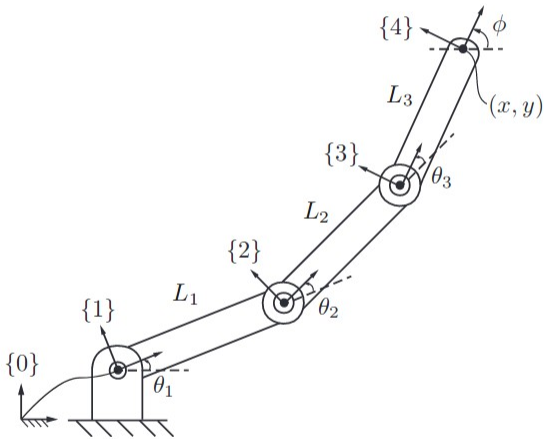

space (world) vs body (e-e) frame

Re-cap: Velocity kinematics

- Jacobian: mapping from joint velocities to Cartesian velocities (expressed e.g. as twists)

$$V = J(\theta)\dot{\theta}$$

- Using screw representation of kinematics, i:th column of Jacobian in space frame is

$$J_{si}(\theta) = [Ad_{e^{[S_1]\theta_1} \cdots e^{[S_{i-1}]\theta_{i-1}}}] S_i$$

- Kinematic singularity: Jacobian is not full rank
  - Can you name examples?

Re-cap: Forward kinematics

- Fwd kinematics
  - Serial chain, product of exponentials
- Jacobian & body-Jacobian
  - Null-space
  - Singularities

- Inverse kinematics
  - Analytical or numerical

Manipulability and force ellipsoids

- Manipulability ellipsoid: how easily the robot can move in different directions, corresponds to eigenvalue decomposition of $J\,J^T$ ← PCA

- Force ellipsoid: how easily the robot can produce forces in different directions, corresponds to eigenvalue decomposition of $\left(J\,J^T\right)^{-1}$

- What happens to these at a singularity?

Manipulability and force ellipsoids

Manipulability

Force

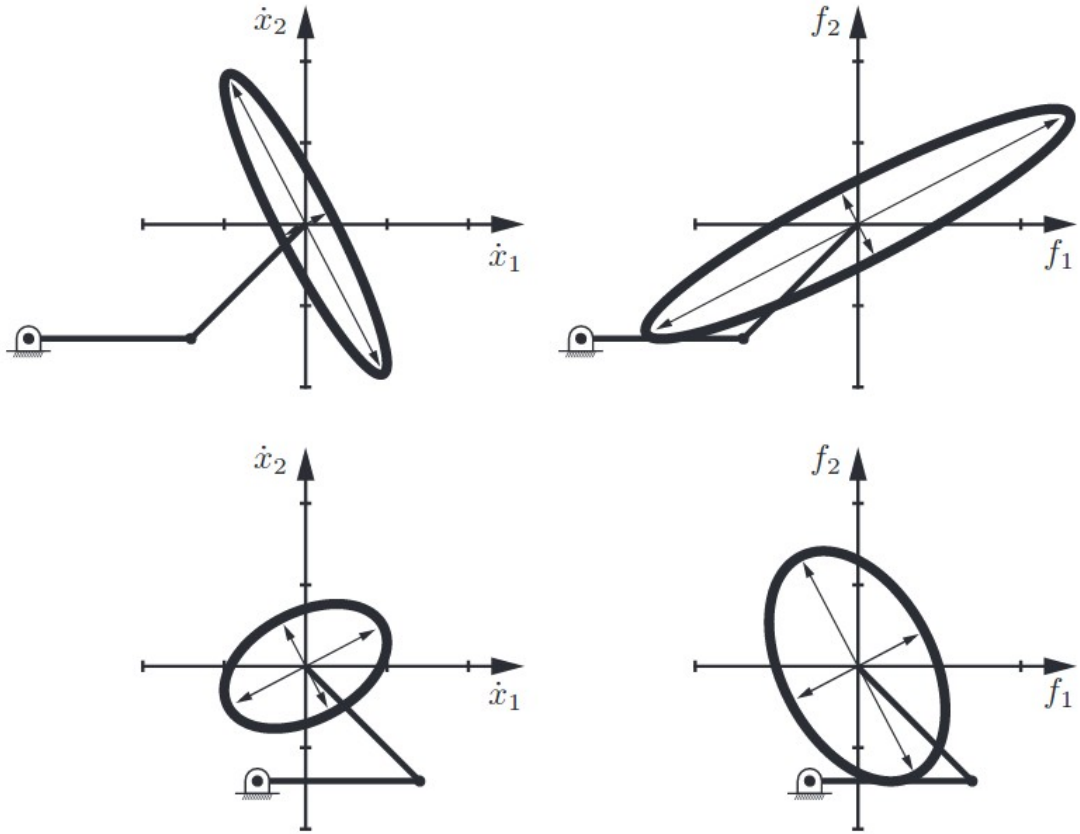

For next time

- To complement this lecture, read L&P chapter 5-5.1.4 (also ch. 3 is useful)
- Next time we'll talk about motion planning (ch. 10)

Extra: Series representation of solution of differential equations

$$\dot{x}(t) = a\,x(t)$$
$$x(t) = e^{at}\,x(0)$$
$$e^{at} = 1 + at + \frac{(at)^2}{2!} + \frac{(at)^3}{3!} + \cdots$$

$$\dot{x}(t) = A\,x(t)$$
$$x(t) = e^{At}\,x(0)$$
$$e^{At} = 1 + At + \frac{(At)^2}{2!} + \frac{(At)^3}{3!} + \cdots$$