Aalto University
School of Electrical
Engineering

ELEC-E8126: Robotic Manipulation
Contacts and Manipulation

Ville Kyrki

17.2.2025

Learning goals

- Increase understanding and gain intuition on mechanics of manipulation.
- Understand the theory of form closure grasp planning.

Goal: Grasp planning

- Where an object needs to be grasped in order to perform a particular task?
  - In this context, where to place contacts on the object to immobilize it.

- Grasp analysis: Given information of contacts on an object *(*informal definition for *a grasp),* determine if the grasp is stable (immobilizes the object).

Today: No friction! (friction coming up next week)

Single contact

- Impenetrability constraint

$$\boldsymbol{F}\cdot\boldsymbol{V}=\boldsymbol{F}^{T}\boldsymbol{V}\geq 0$$

contact wrench

motion velocity twist

contact point,

contact normal

$$\boldsymbol{F}=(\underbrace{\boldsymbol{p}\times\boldsymbol{n}}_{rotation},\ \underbrace{\boldsymbol{n}}_{translation})$$

- Motion constrained to half-plane

- $\boldsymbol{F}^{T}\boldsymbol{V}=0$ if bodies remain in contact (to first-order, not considering curvature).

Several contacts in plane

- Can the object move? Around which point?

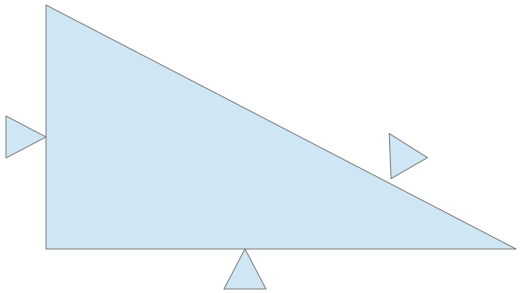

Several contacts in plane

- Geometric approach (instant center of rotation)

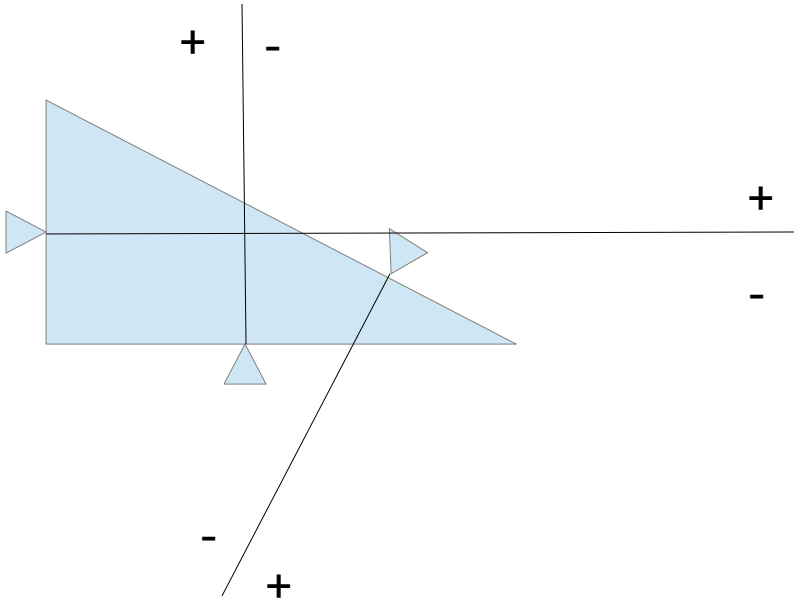

Several contacts in plane

- Geometric approach (instant center of rotation)

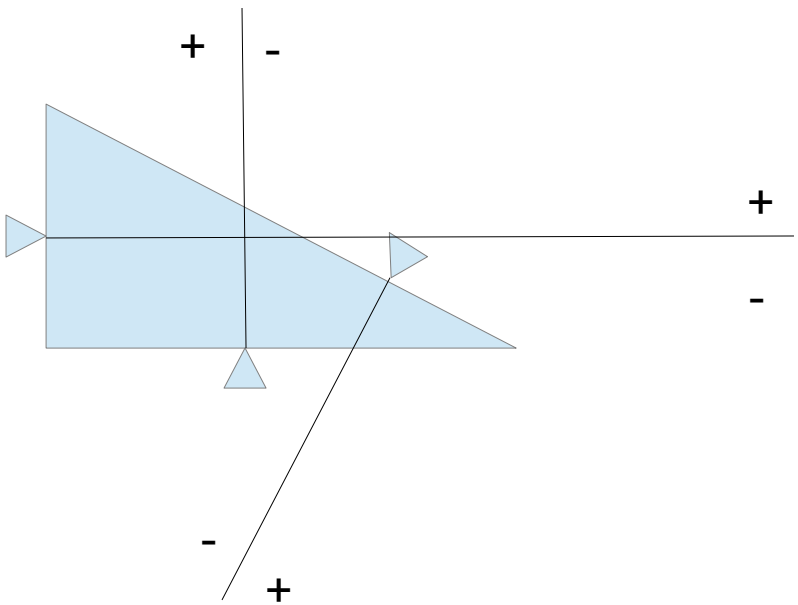

Where to add a contact to immobilize the object?

Contact constraints

- What are the feasible motions?

For each (not moving) contact:

$$\boldsymbol{F}_i^T \boldsymbol{V} \geq 0$$

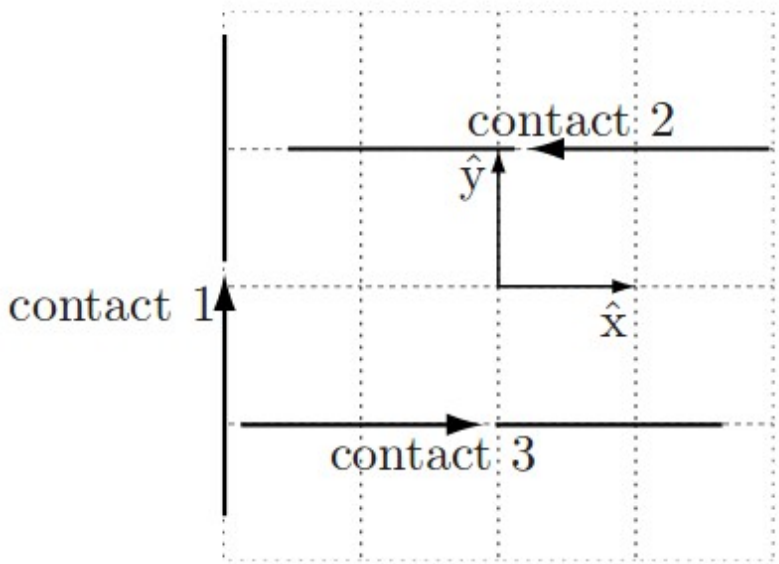

$$\boldsymbol{F} = (m_z, f_x, f_y) = ?$$

Motion constraints?

Contact constraints

- Contact constraints form a polyhedral convex cone

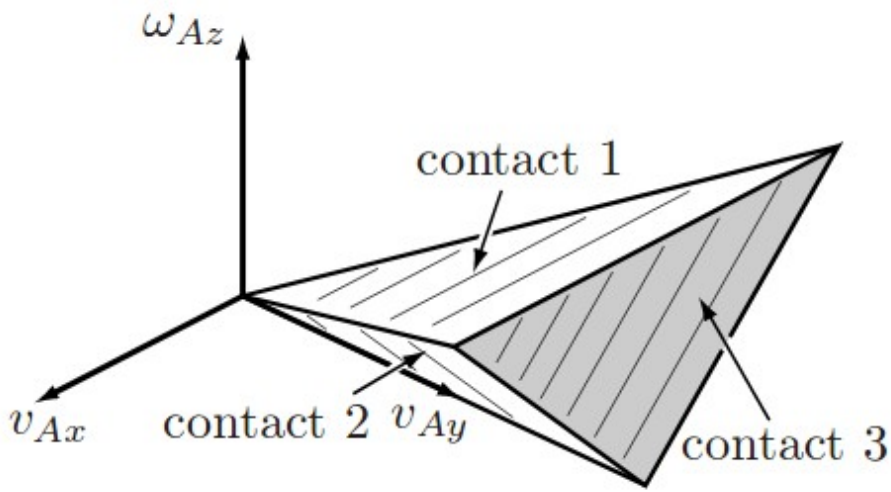

What happens if contacts immobilize object?

Form closure

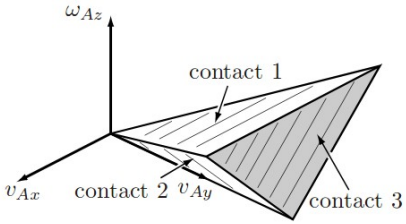

- Form closure: a set of stationary contacts prevents all motions.
- Using first order analysis, impenetrability constraints are satisfied only by zero twist.

$$\boldsymbol{F}_i^T \boldsymbol{V} \geq 0$$

- Equivalently, contact wrenches span positively entire space.

$$\left\{ \sum_i k_i \boldsymbol{F}_i \middle| k_i \geq 0 \right\} = R^6$$

linear prog. sol.

- Higher-order analysis may provide form closure even without above constraints (curved surfaces).

Quality of a grasp

- Is one of these grasps better? Why?

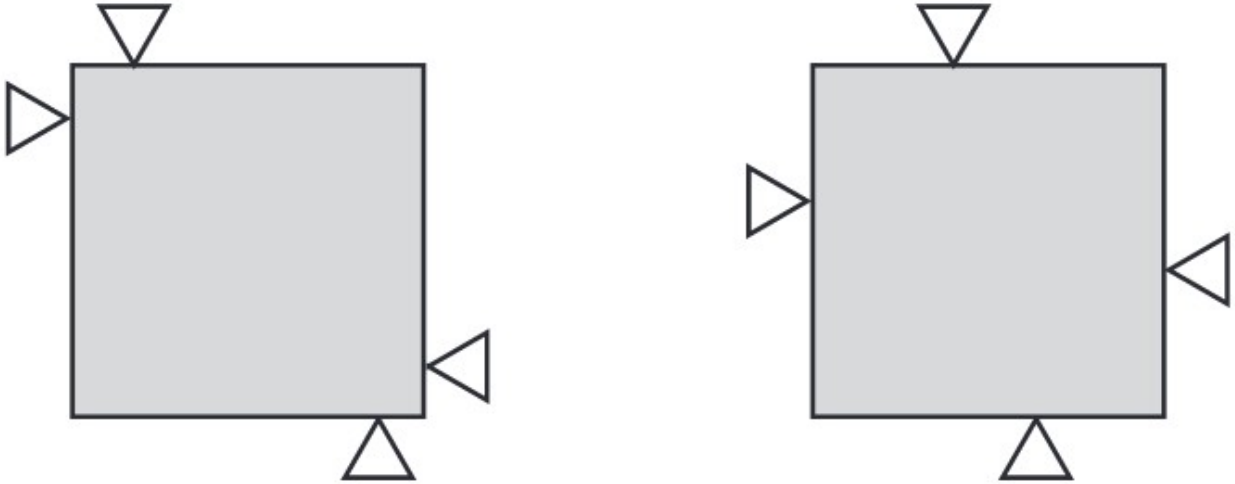

Note: Different aspects of quality lead to different answers.

Grasp quality metrics

- Grasp metric (Q): A number calculated based on contact wrenches so that Q<0 indicates not stable and larger positive values indicate better grasps.

- Typical idea: How big external disturbances a grasp can withstand.
- Information about tasks or expected disturbances can be used.

Worst case quality without prior information

maximum force per contact

- Set of possible wrenches:

$$CF = \left\{ \sum_i k_i \boldsymbol{F}_i \middle| 0 \le k_i \le f_{max} \right\} = R^6$$

- What's the largest ball that fits inside polytope CF?

  smallest external force that breaks grasp

- Practical notes
  - scale moments (torques) by characteristic length of object
  - origin at object CoM

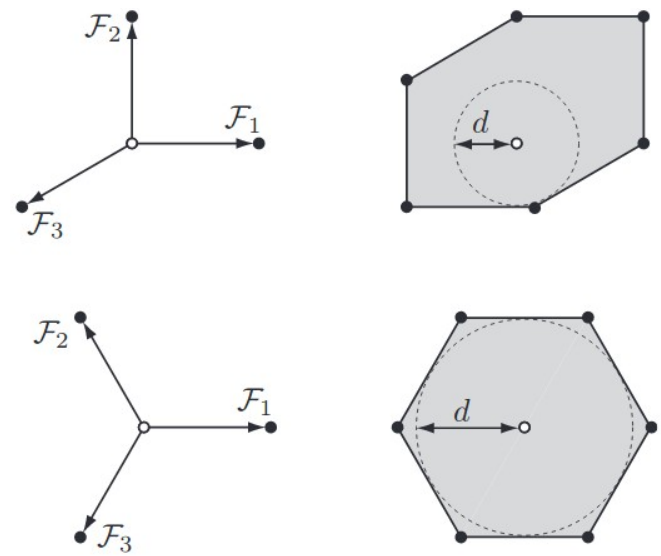

Ball radius: Distance of closest hyperplane to origin

Which one is better?

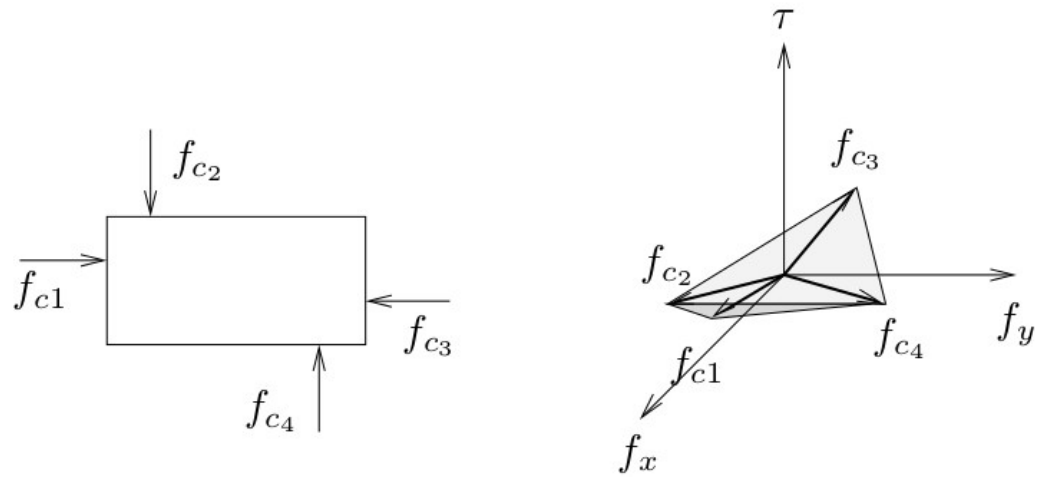

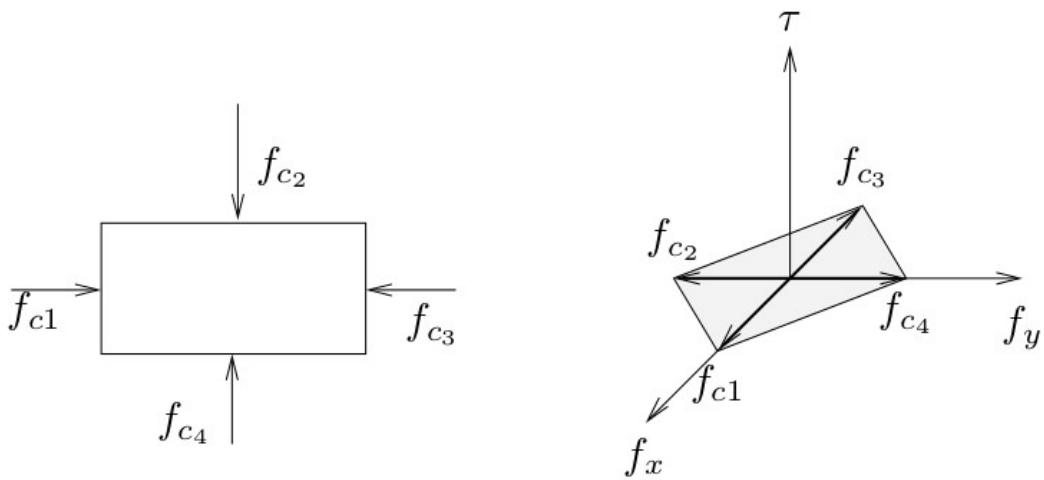

Sampling based grasp planning

- Now that we have a metric, how to plan a grasp?
- Sampling
  - Choose candidate contacts
  - Evaluate resulting grasp
- More about grasp planning next week

Or optimize numerically (e.g. simulated annealing).

Summary

- Form closure means that the form of stationary contacts prevents motion.
- Impenetrability constraints can be used to analyze feasible motions.
- Grasps can be planned by maximizing grasp quality metrics.

Next time: Manipulation and friction

- Contacts with friction
- State-of-the-art in grasp planning

- Readings:
  - Lynch & Park, Chapter 12.2-12.2.2