Aalto University
School of Electrical
Engineering

ELEC-E8126: Robotic Manipulation
Constrained and parallel kinematics

Ville Kyrki

3.3.2025

Learning goals

- Understand modeling and characteristics of closed kinematic chains.
- Understand constraints posed by closed chains in contexts of parallel robots, cooperative manipulation and dextrous manipulation.

Terminology

- Closed kinematic chain - loops
- Actuated (active) vs unactuated (passive) joints
  - Why have unactuated joints?

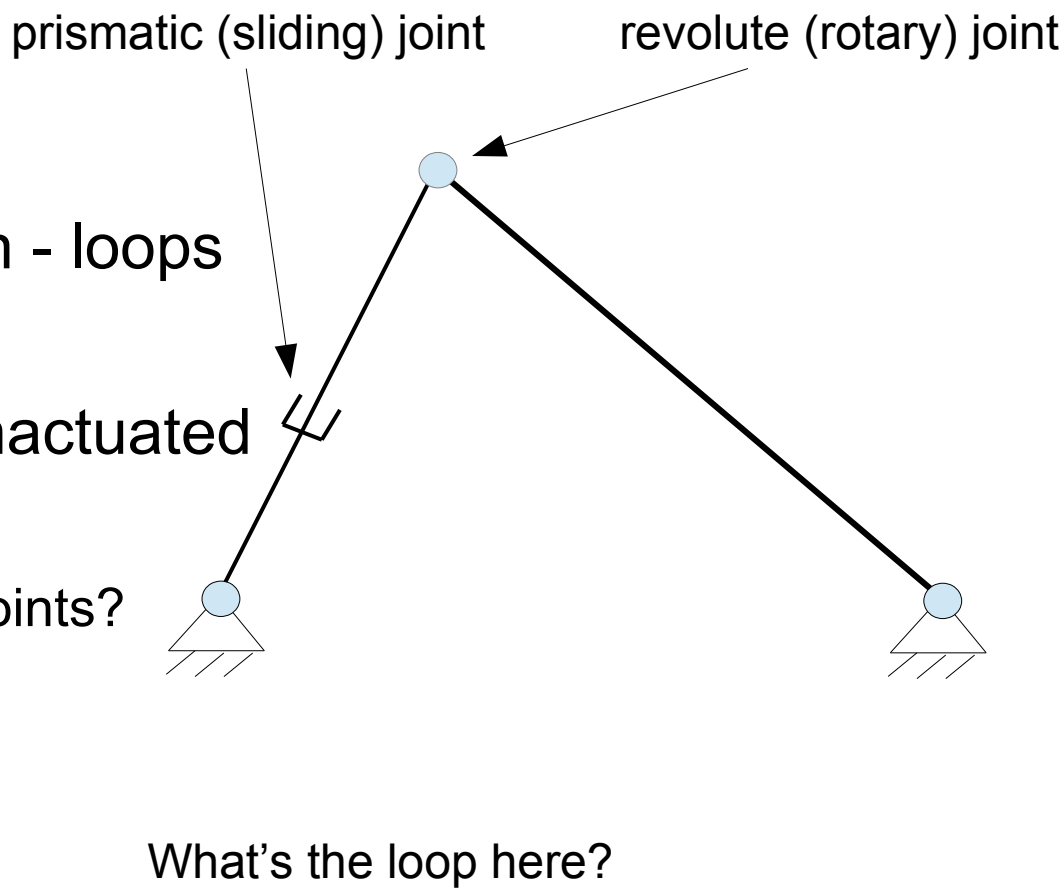

Typical parallel robot characteristics

Compared to serial-link arms:

- Small workspace
- Accurate
- Rigid structure
- More difficult to model

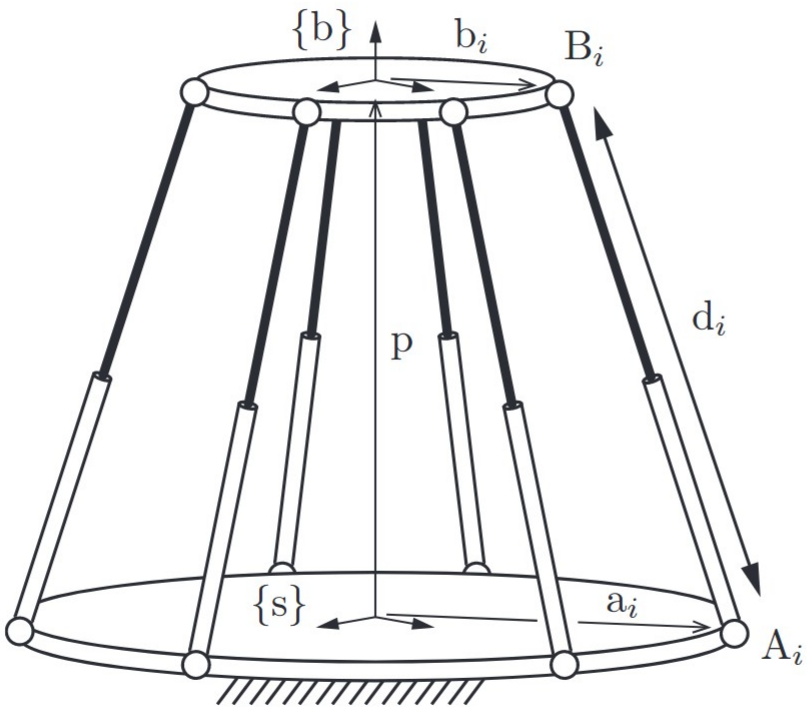

Stewart platform

Kinematic constraints

- What is the position of top point with respect to the length of prismatic joint *d*?
  - What is the constraint equation?

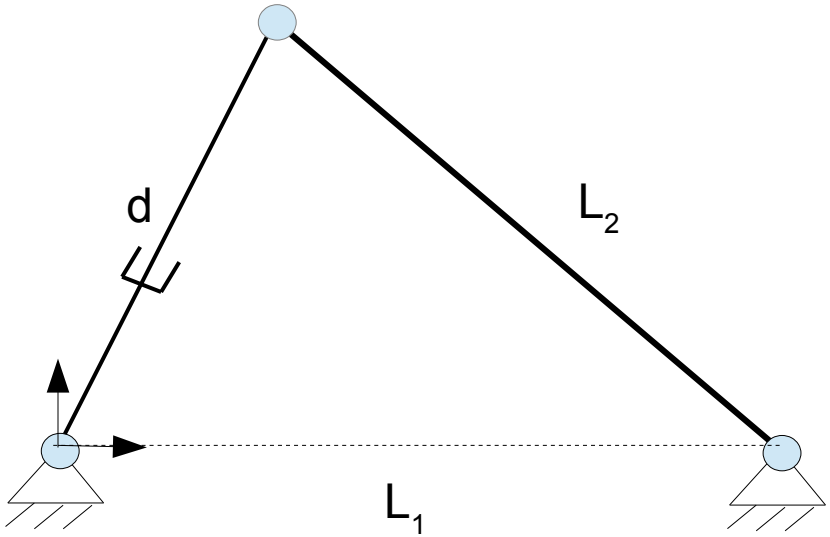

Kinematic constraints

Cosine law:

$$C^2 = A^2 + B^2 - 2\,A\,B\cos\alpha$$

- What is the position of top point with respect to the length of prismatic joint *d*?
  - What is the constraint equation?

$$d^2 = L_1^2 + L_2^2 - 2\,L_1\,L_2\cos\alpha$$

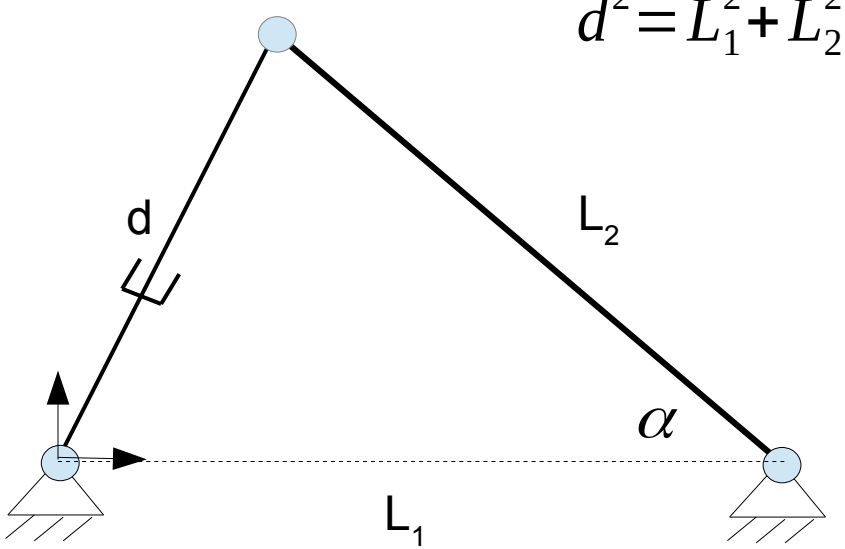

How to now solve the position of the top point?

Kinematic constraints

- What is the position of top point with respect to the length of prismatic joint *d*?
  - What is the constraint equation?

$$d^2 = L_1^2 + L_2^2 - 2 L_1 L_2 \cos \alpha$$

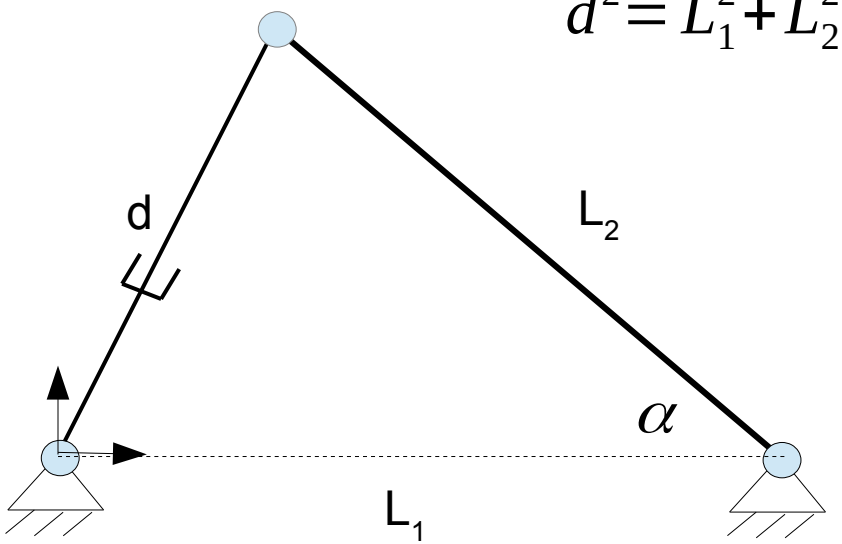

How to now solve the position of the top point?

e.g. $y = L_2 \cos \alpha = (L_1^2 + L_2^2 - d^2)/(2 L_1)$

rotation-prismatic-rotation

3xRPR – mechanism and kinematics

- Planar mechanism with 3 RPR structures.
- Prismatic joints actuated, revolute joints passive.

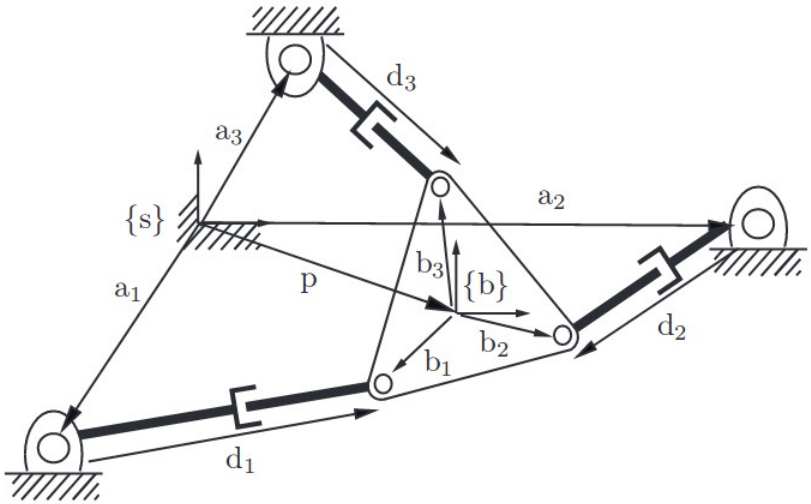

- Constraint equations

$$d_i^2 = (p_x + b_{ix}\cos\phi - b_{iy}\sin\phi - a_{ix})^2 + (p_y + b_{ix}\sin\phi + b_{iy}\cos\phi - a_{iy})^2$$

What do the constraint equations provide us?

3xRPR – mechanism and kinematics

- Planar mechanism with 3 RPR structures.
- Prismatic joints actuated, revolute joints passive.

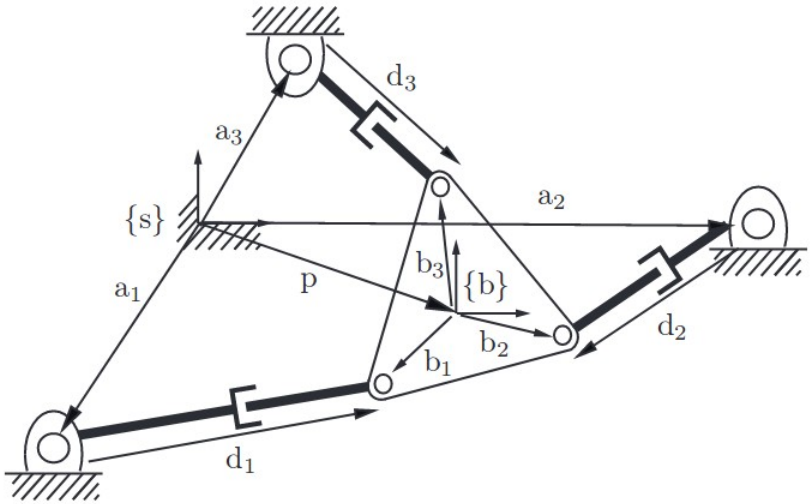

- Constraint equations

$$d_i^2 = (p_x + b_{ix}\cos\phi - b_{iy}\sin\phi - a_{ix})^2 + (p_y + b_{ix}\sin\phi + b_{iy}\cos\phi - a_{iy})^2$$

What do the constraint equations provide us?

3xRPR – mechanism and kinematics

- Planar mechanism with 3 RPR structures.
- Prismatic joints actuated, revolute joints passive.

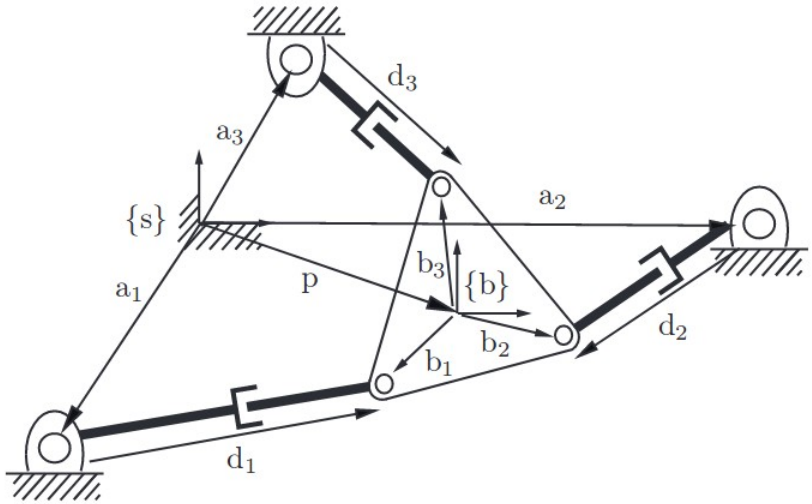

- Constraint equations

$$d_i^2 = (p_x + b_{ix}\cos\phi - b_{iy}\sin\phi - a_{ix})^2 + (p_y + b_{ix}\sin\phi + b_{iy}\cos\phi - a_{iy})^2$$

What do the constraint equations provide us? Inverse kinematics!

What about forward kinematics?

Forward kinematics

- Fwd kinematics of parallel kinematics often non-unique.

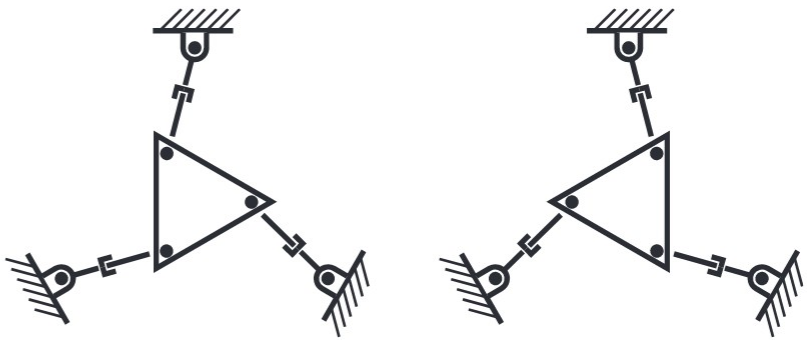

Is fwd kin unique for this?

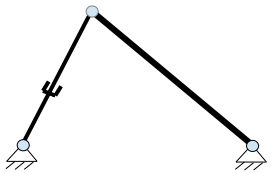

- Different type of singularity compared to serial mechanisms. But in which way?

Jacobian and constraint Jacobian

- Jacobian can be obtained also from inverse kinematics.
  - Why/how? $\boldsymbol{\theta} = f_{ik}(\mathbf{x})$ $\dot{\mathbf{x}} = J(\boldsymbol{\theta})\,\dot{\boldsymbol{\theta}}_{\boldsymbol{a}} = \frac{\partial f_{fk}(\boldsymbol{\theta})}{\partial \boldsymbol{\theta}}\,\dot{\boldsymbol{\theta}}_{\boldsymbol{a}}$ active

Jacobian and constraint Jacobian

- Jacobian can be obtained also from inverse kinematics.
  - Why/how? $\boldsymbol{\theta} = f_{ik}(\mathbf{x})$ $\quad \dot{\mathbf{x}} = J(\boldsymbol{\theta})\,\dot{\boldsymbol{\theta}}_a = \dfrac{\partial f_{fk}(\boldsymbol{\theta})}{\partial \boldsymbol{\theta}}\,\dot{\boldsymbol{\theta}}_a$ active

- Constraint Jacobian – Jacobian of the set of constraint equations.

$$h(\boldsymbol{\theta}) = \mathbf{0}$$

$$H(\boldsymbol{\theta})\,\dot{\boldsymbol{\theta}} = \left[H_a(\boldsymbol{\theta})\; H_p(\boldsymbol{\theta}) \right] \begin{bmatrix} \dot{\boldsymbol{\theta}}_a \\ \dot{\boldsymbol{\theta}}_p \end{bmatrix} = \mathbf{0}$$

active passive

What was the relationship of Jacobian to singularities for serial kinematic chains?

Singularities of parallel mechanisms

- End-effector singularities
  - Jacobian loses rank $rank(J)<n$.
  - Do not depend on which joints are actuated.
    - Even though Jacobian maps active joint velocities to Cartesian velocities.
  - Similar to singularities of serial robots.

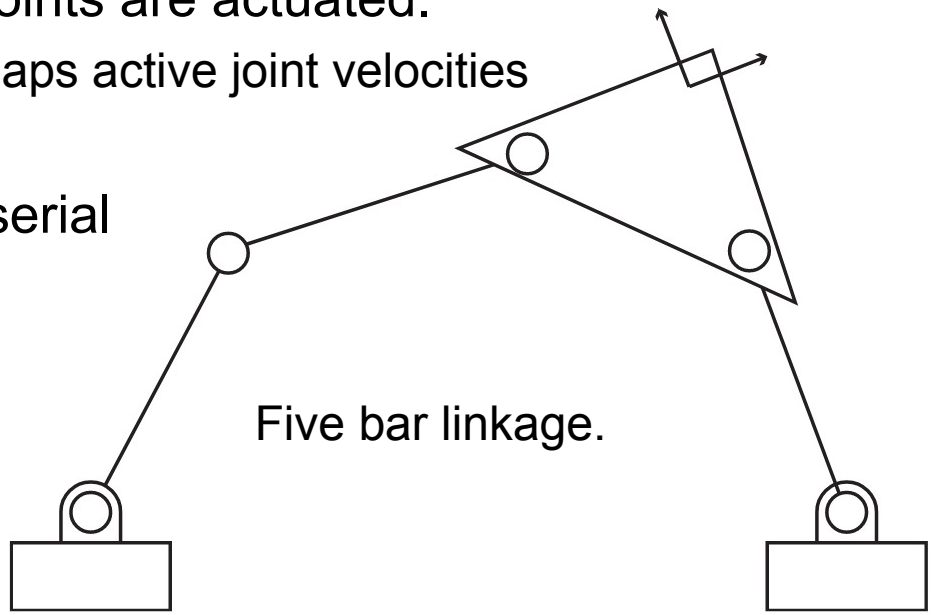

Five bar linkage.

What is the direction of the singularity here?
In which direction the e-e point cannot move?

Singularities of parallel mechanisms

- Configuration space singularities
  - Constraint Jacobian loses rank $rank(H) < p$.
  - Do not depend on which joints are actuated.
  - Branching points/regions in full configuration space.

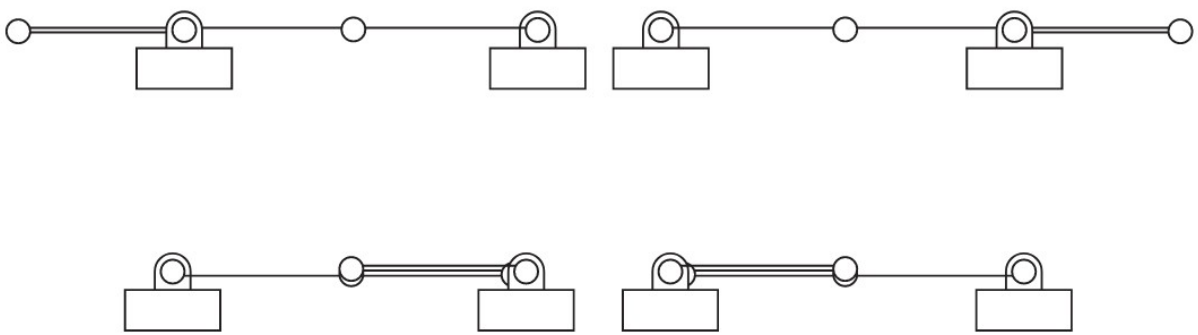

Configuration space singularity example

- Four bar linkage

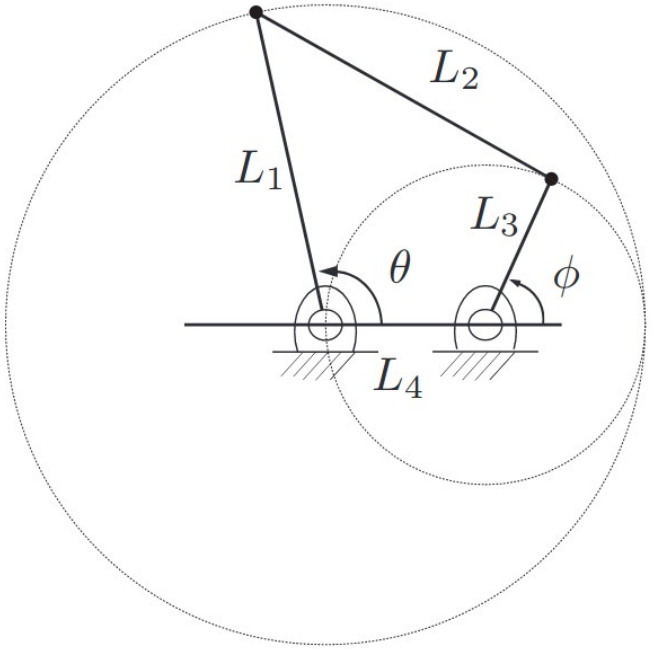

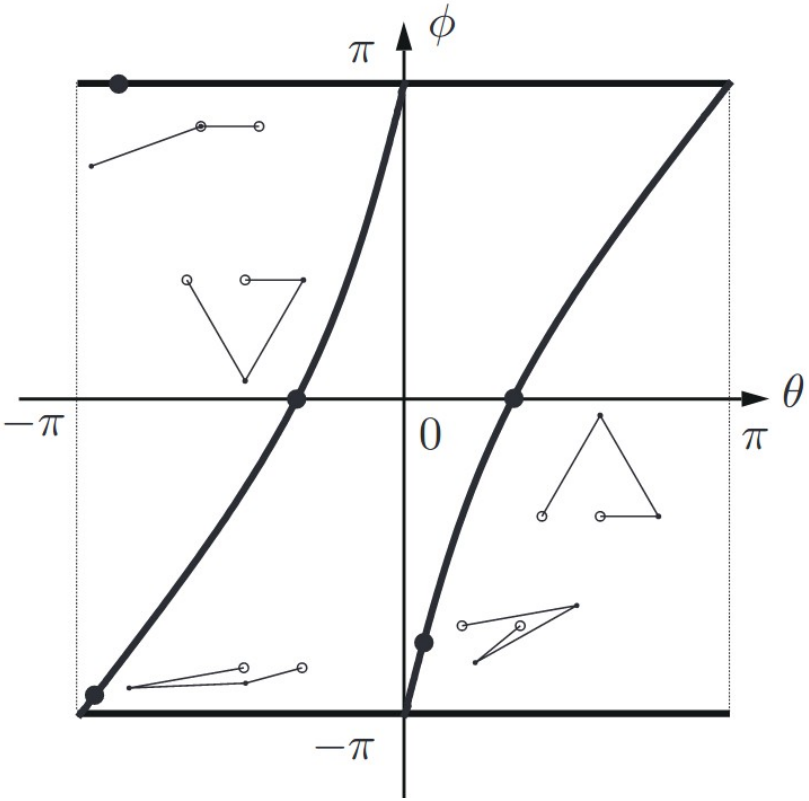

Where are the singularities?

Singularities of parallel mechanisms

- Actuator singularities
  - Constraint Jacobian of passive joints loses rank $rank(H_p) < p$
  - Changing the set of actuated joints will eliminate the singularity.
    - But new one(s) may be created.

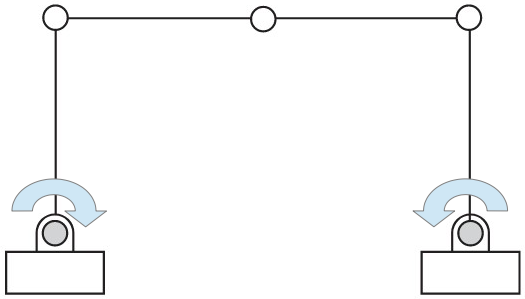

What happens?
Can you avoid by changing actuated joints? How?

Why not actuate all joints then?

Closed chains and manipulation

- Are there situations where manipulation creates closed chains?

Closed chains and manipulation

- Are there situations where manipulation creates closed chains?

- Cooperative (dual-arm) manipulation
- Dexterous (in-hand) manipulation

- Let’s take a quick look at these.

Cooperative manipulation

- Cooperative manipulation: Multiple arms manipulate a tightly grasped (rigid) object.

- What kind of constraints exist?

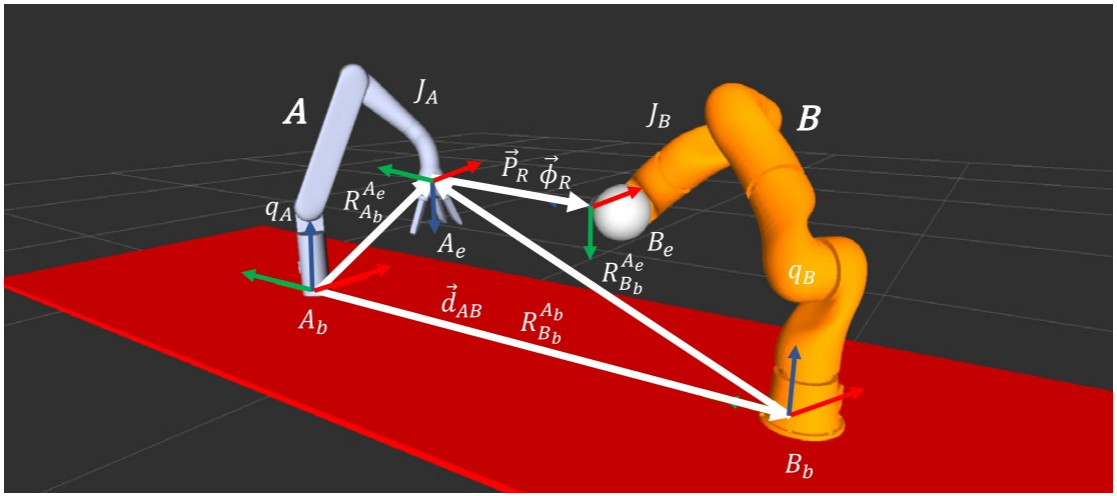

Frame transforms?
Total wrench on object?

Kinematic constraints

- Chain remains closed (and rigid) →
  - Robot velocities need to match in object frame.
  - Alternatively, relative pose remains constant.

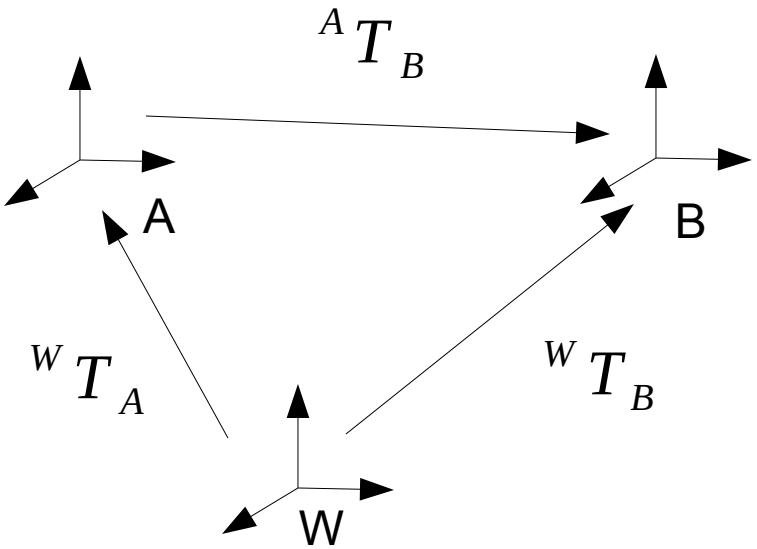

Closed kinematic chain?

Relative Jacobian

- Jacobian of relative pose is called relative Jacobian

$$\dot{x}_R = J_R \begin{bmatrix} \dot{\theta}_A \\ \dot{\theta}_B \end{bmatrix}$$

Size?

- Can be calculated using individual robot Jacobians.
- What is the loop closure constraint given the relative Jacobian?

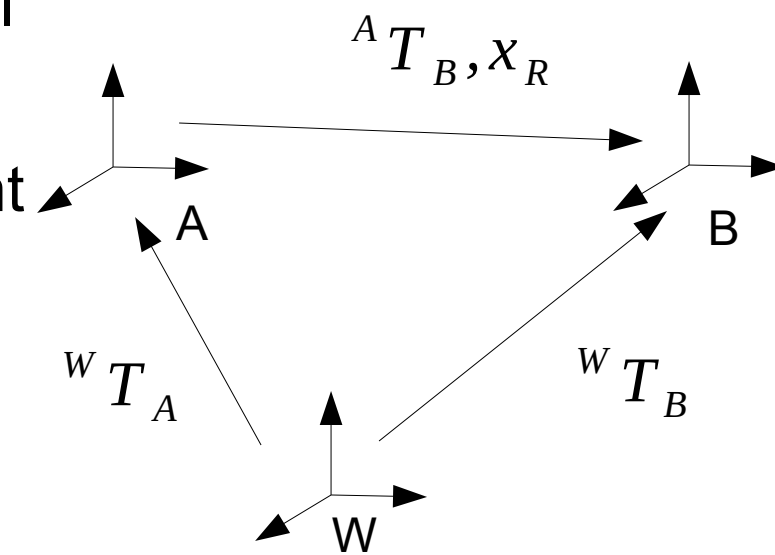

$$J_R \begin{bmatrix} \dot{\theta}_A \\ \dot{\theta}_B \end{bmatrix} = J_R \dot{\theta} = 0$$

Can be used to derive a closed-loop controller
Is there anything strange with that?

$$\dot{\theta} = J_R^{+} K \left(x_R - x_R^{*} \right)$$

Relative Jacobian and coordinated motion control

- Let's define a (hybrid) velocity controller using relative Jacobian.

$$\dot{\theta} = \underbrace{J_R^+ K_R (x_R - x_R^*)}_{relative\ pose\ fb} + \underbrace{\overbrace{(I - J_R^+ J_R)}^{P_R} [J_A \quad 0]^+ (\dot{x}_A^* + K_P (x_A - x_A^*))}_{pose\ fb}$$

Check position+force control lecture!

Dynamics of cooperative manipulation

- What is the total wrench applied on the object?

$$^{O}F = {}^{O}F_A + {}^{O}F_B = G_A F_A + G_B F_B = G \overbrace{\begin{bmatrix} F_A \\ F_B \end{bmatrix}}^{F}$$

$$F = G^{+}\,{}^{O}F + V_S F_I$$

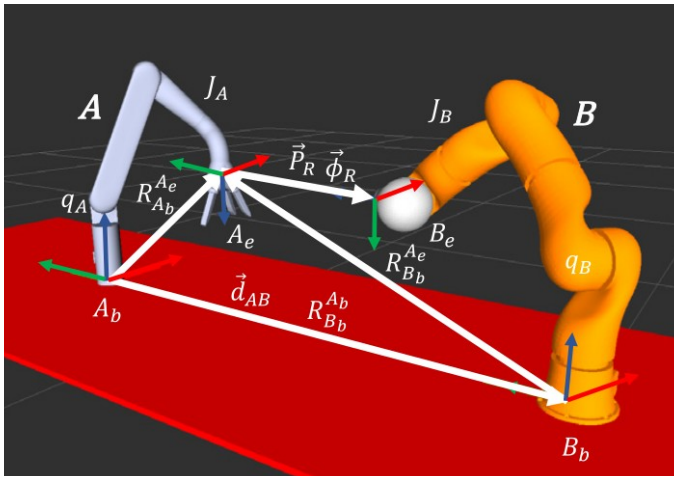

- External wrench ^{O}F
- Internal forces in $V = null(G)$
  - How do we want this to behave?
  - Would internal forces be useful in some case?

Dextrous manipulation

- To manipulate grasped objects in hand,
  - finger motions need to be coordinated for grasp to remain stable.
  - object needs to be manipulable.
- What does this mean beyond force closure?

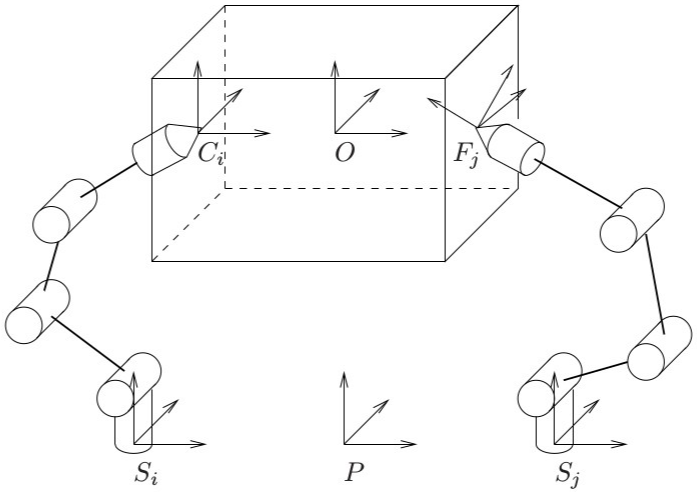

Coordinated motion in grasping

- Finger motions have to correspond to object motion at contacts

$$J \underbrace{\dot{\boldsymbol{\theta}}}_{\text{finger joint vels}} = G^T \underbrace{V_O}_{\text{object twists}}$$

Why is this more than the relative Jacobian?

- Each contact only in friction constrained directions

$$H \hat{J} \dot{\boldsymbol{\theta}} = H \hat{G}^T V_O$$

Selection matrix to choose constrained directions

- What is then the constraint for fingers to be able to generate any twist V_O? $rank(G) = 6$ $rank(GJ) = 6$

force closure (almost)

Finger motions can create any object motion.

Manipulability vs force closure

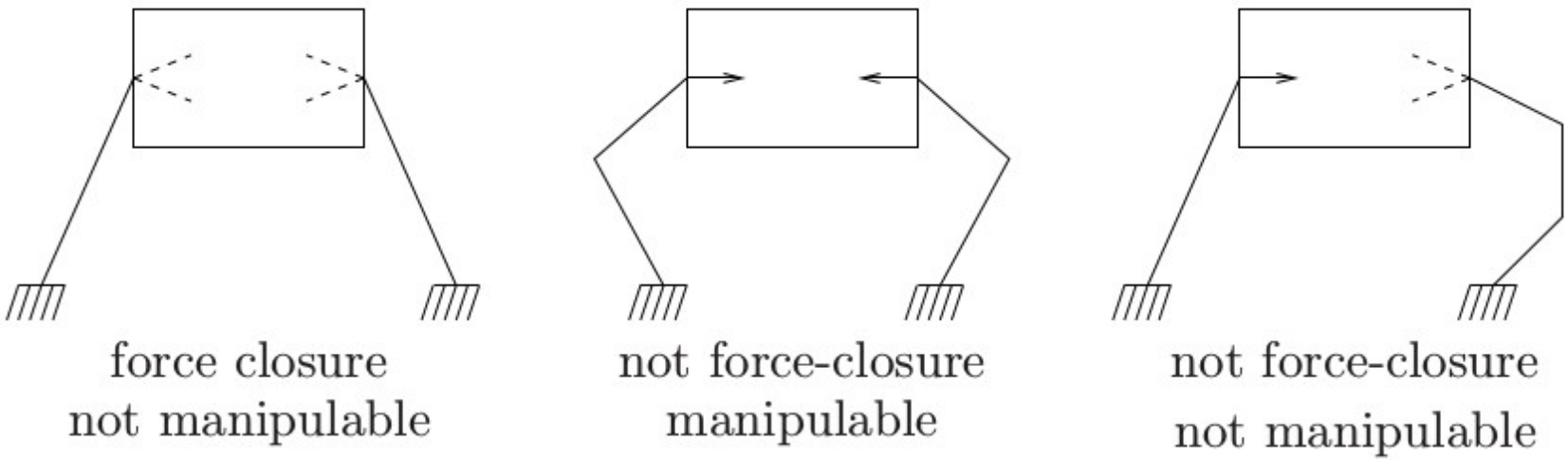

Manipulability example: 2x SCARA

- Assume soft fingers (there's torsional friction around contact normal).
- Is the grasp force closure?
- Is the grasp manipulable?

controllable joints

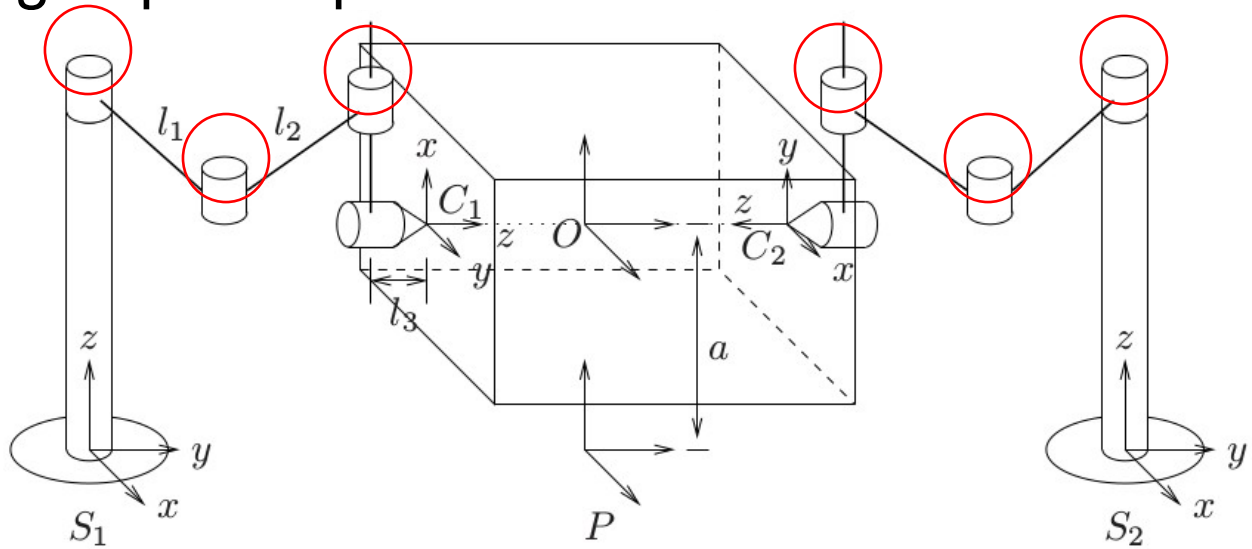

Summary

- Parallel robots have typically both actuated and unactuated joints in closed chains.
  - Inverse kinematics for typical parallel robots are often unique.
  - Forward kinematics often yields multiple solutions.

- Closed chains also appear in cooperative and dexterous manipulation.

Next time: Redundancy

- Readings:
  - Chiaverini et al., “Redundant robots”, in Springer Handbook of Robotics, 2nd ed., ch. 10-10.2.2.
    - Freely available through library webpage lib.aalto.fi. Log-in first and then search for “Springer Handbook of Robotics”.