Aalto University
School of Electrical
Engineering

# ELEC-E8126: Robotic Manipulation
# Kinematic redundancies

Ville Kyrki

10.3.2025

# Learning goals

- Understand modeling and characteristics of redundant kinematic chains.
- Understand how redundancy can be used to address e.g. singularities, joint limits or obstacles.

# Kinematic redundancy

- *Kinematically redundant* manipulator has more than minimal number of degrees of freedom to complete its *task*.
  - Thus, same task configuration can be achieved with infinitely many joint configurations.
- Why are kinematically redundant manipulators interesting?

Sofge&Chiang 2007

# Kinematic redundancy

- *Kinematically redundant* manipulator has more than minimal number of degrees of freedom to complete its *task*.
  - Thus, same task configuration can be achieved with infinitely many joint configurations.
- Why are kinematically redundant manipulators interesting?
  - Secondary tasks: e.g. avoid singularities, avoid joint limits, avoid obstacles, optimize motion.

# Example: 6-DOF manipulator, translation task

- 6-DOF serial manipulator
- Only translation of e-e needs to be controlled in position.
  - Orientation can be ignored.

- How many *degrees of motion* does the robot have?
- How many are constrained by task?
- Is the system redundant?

# Inverse differential kinematics

- Remember: Forward differential kinematics

$$\dot{\mathbf{x}} = J(\boldsymbol{\theta})\,\dot{\boldsymbol{\theta}}$$

- What is the inverse of this?
- When is it non-unique?
- What are the other solutions?

# Inverse differential kinematics

- Remember: Forward differential kinematics

$$\dot{\mathbf{x}} = J(\boldsymbol{\theta})\,\dot{\boldsymbol{\theta}}$$

- What is the inverse of this? $\dot{\boldsymbol{\theta}} = J^{-1}(\boldsymbol{\theta})\,\dot{\mathbf{x}}$ $\dot{\boldsymbol{\theta}} = J^{+}(\boldsymbol{\theta})\,\dot{\mathbf{x}}$
- When is it non-unique?
- What are the other solutions?

$$\dot{\boldsymbol{\theta}} = J^{+}(\boldsymbol{\theta})\,\dot{\mathbf{x}} + \left(I - J^{+}(\boldsymbol{\theta})\,J(\boldsymbol{\theta})\right)\dot{\boldsymbol{\theta}}_0$$

any vector

# Null space revisited

$$\dot{\boldsymbol{\theta}} = J^{+}(\boldsymbol{\theta})\dot{\mathbf{x}} + \left(I - J^{+}(\boldsymbol{\theta})J(\boldsymbol{\theta})\right)\dot{\boldsymbol{\theta}}_{\mathbf{0}}$$

can also be written

$$\begin{aligned}\dot{\boldsymbol{\theta}} &= J^{+}(\boldsymbol{\theta})\dot{\mathbf{x}} + N\,N^{+}\dot{\boldsymbol{\theta}}_{\mathbf{0}} \\ &= J^{+}(\boldsymbol{\theta})\dot{\mathbf{x}} + P\,\dot{\boldsymbol{\theta}}_{\mathbf{0}}\end{aligned}$$

- $N$ is null space of $J(\boldsymbol{\theta})$
  - Set of vectors $N = \{\boldsymbol{n}_1, \boldsymbol{n}_2, \ldots\}$ such that $J(\boldsymbol{\theta})\boldsymbol{n}_i = \mathbf{0}$

# Internal (self) motion example

- Task: 2-D position.

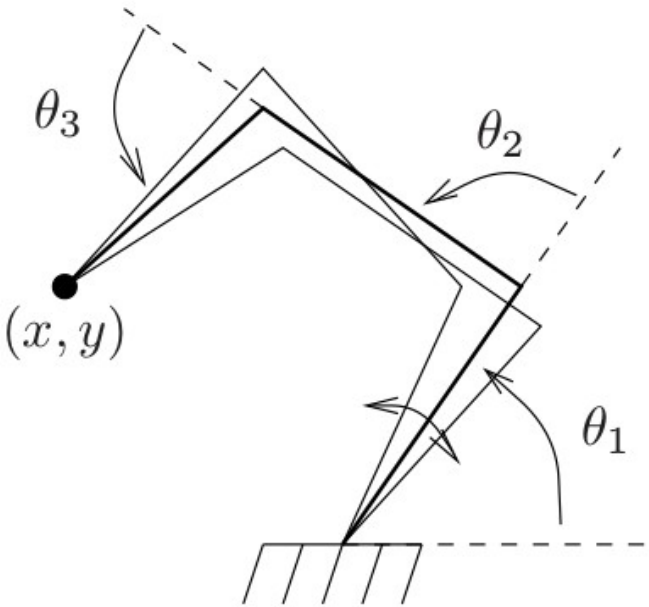


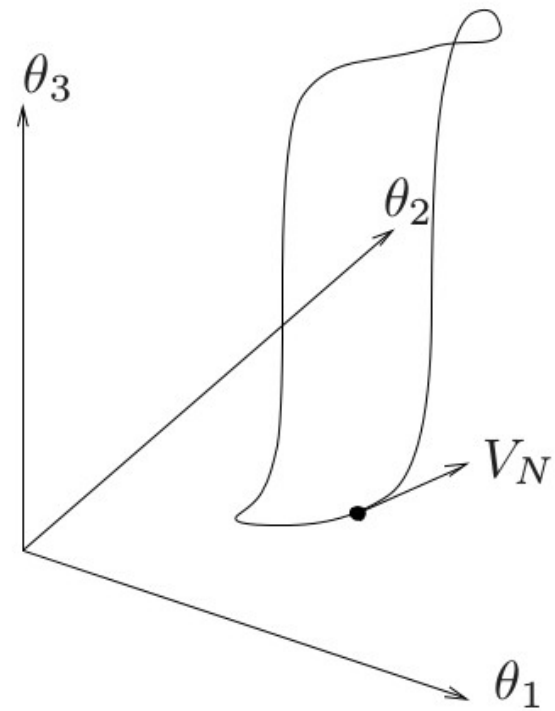




Note: Internal motion is a changing combination of joint velocities (and accelerations).

# Using internal motions

- Why did we want internal motions?

- How? Two approaches:
  - Optimize performance criteria.
  - Add more tasks.

We'll look at this a bit closer.

But first an example of this.

- Both approaches only move in null space of primary task.

$$\dot{\boldsymbol{\theta}} = J^{+}(\boldsymbol{\theta})\dot{\mathbf{x}} + \boxed{\left(I - J^{+}(\boldsymbol{\theta})J(\boldsymbol{\theta})\right)\dot{\boldsymbol{\theta}}_0}$$

# Using null space with extra tasks
# Example: joint-limit avoidance

- Use null-space to avoid joint limits

$$\dot{\theta} = J^{+}(\theta)\dot{x} + k_J P W(\theta - \theta_{MAX})$$

primary task

null space projection

$$I - J^{+}(\theta) J(\theta)$$

smooth activation

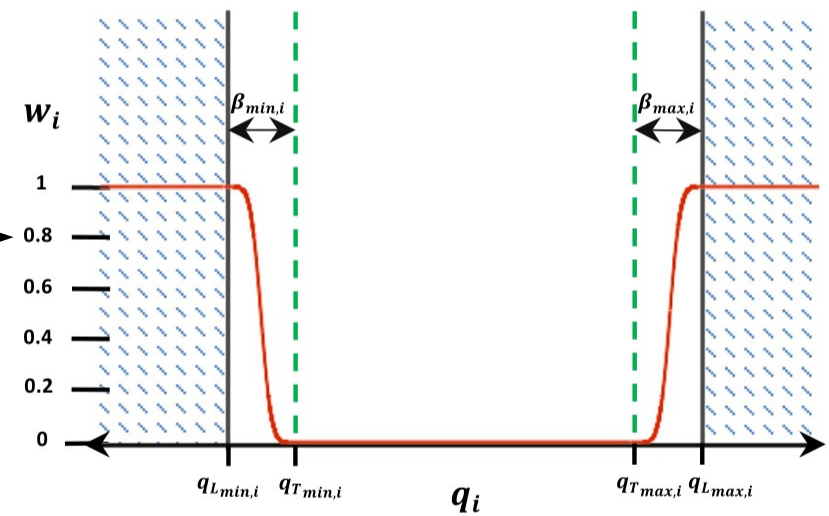




Ortenzi et al., 2007

# Optimizing performance criteria

- Consider we want to minimize some joint-dependent criterion $H(\boldsymbol{\theta})$ that can be expressed analytically and is differentiable
- How to write a controller to move joints towards minimum of *H*?

$$\dot{\boldsymbol{\theta}} = J^{+}(\boldsymbol{\theta})\dot{\mathbf{x}} + \left(I - J^{+}(\boldsymbol{\theta})J(\boldsymbol{\theta})\right)\dot{\boldsymbol{\theta}}_0$$

# Optimizing performance criteria

- Consider we want to minimize some joint-dependent criterion $H(\boldsymbol{\theta})$ that can be expressed analytically
- How to write a controller to move joints towards minimum of *H*?

$$\dot{\boldsymbol{\theta}} = -k_H \nabla H(\boldsymbol{\theta})$$

- Now substitute to velocity controller:

$$\dot{\boldsymbol{\theta}} = J^{+}(\boldsymbol{\theta})\dot{\mathbf{x}} - k_H\left(I - J^{+}(\boldsymbol{\theta})J(\boldsymbol{\theta})\right)\nabla H(\boldsymbol{\theta})$$

# Performance criteria examples

- Joint-limit avoidance
  - Propose criteria!

- Singularity avoidance
  - E.g. manipulability

$$H(\boldsymbol{\theta}) = -\sqrt{\left|J(\boldsymbol{\theta})J^T(\boldsymbol{\theta})\right|}$$

# Connection: In-hand motions / Kinematic and actuator redundancies

- Remember the grasping constraint?

$$J\dot{\boldsymbol{\theta}} = G^T \boldsymbol{V}_o$$

- Kinematic redundancy – null space of J.
  - Internal motions.
- Actuator redundancy – null space of G.
  - Internal forces.

# Summary

- Redundancies can be used to resolve additional tasks without sacrificing primary task.
- Redundancies are especially useful to avoid joint limits and singularities.

# Next time: Learning in manipulation

- Readings:
  - Kroemer et al., "A review on robot learning for manipulation", secs. 1-3.
  - Link available on course website.