pl-model-1

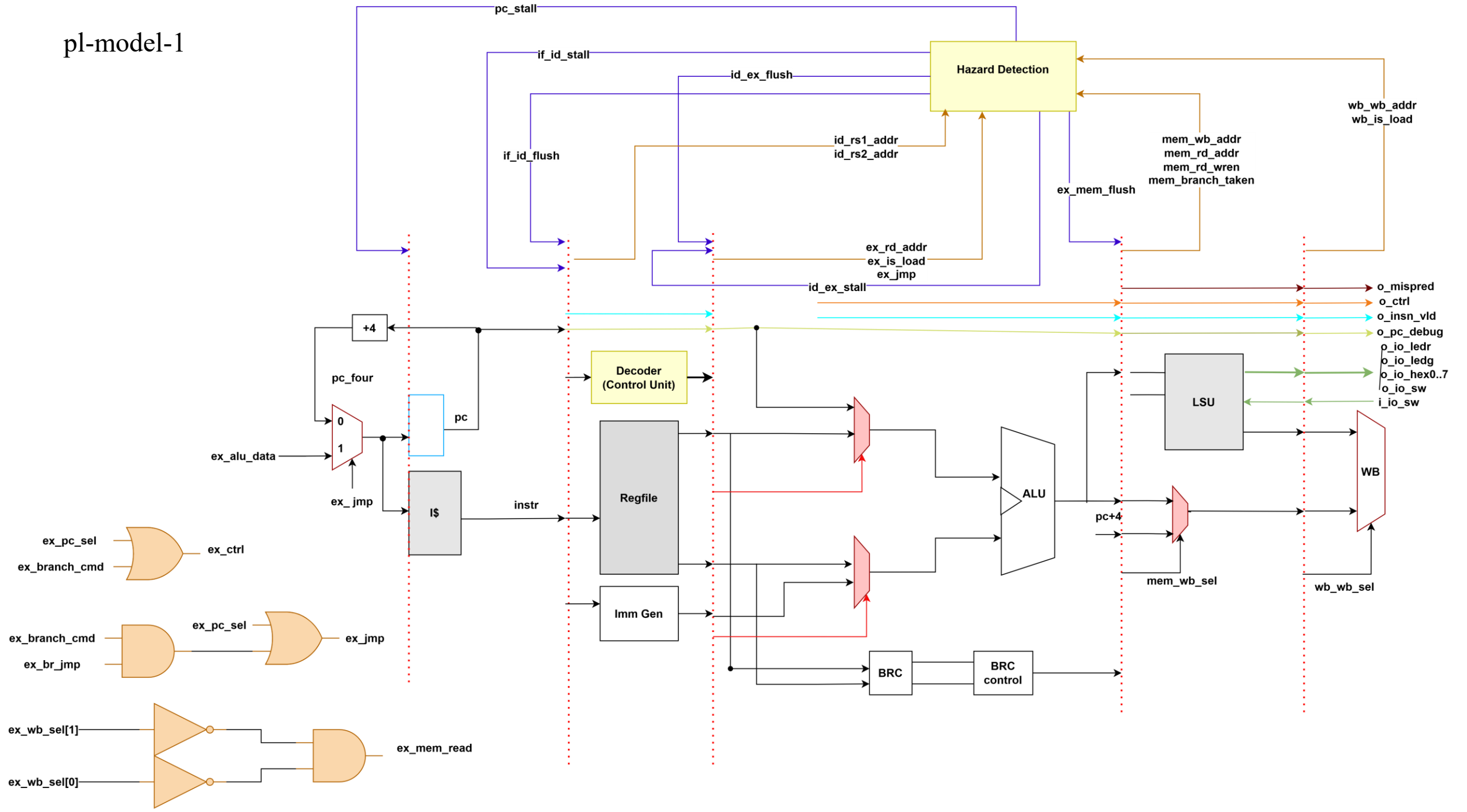
pc_stall
if_id_stall
id_ex_flush
Hazard Detection
wb_wb_addr
wb_is_load
if_id_flush
id_rs1_addr
id_rs2_addr
mem_wb_addr
mem_rd_addr
mem_rd_wren
mem_branch_taken
ex_mem_flush
ex_rd_addr
ex_is_load
ex_jmp
id_ex_stall
o_mispred
o_ctrl
o_insn_vld
o_pc_debug
o_io_ledr
o_io_ledg
o_io_hex0..7
o_io_sw
i_io_sw
+4
pc_four
Decoder
(Control Unit)
LSU
pc
0
1
ex_alu_data
ex_ jmp
I$
instr
Regfile
ALU
WB
pc+4
mem_wb_sel
wb_wb_sel
ex_pc_sel
ex_branch_cmd
ex_ctrl
Imm Gen
ex_br_jmp
ex_jmp
BRC
BRC
control
ex_wb_sel[1]
ex_wb_sel[0]
ex_mem_read

pl-model-2

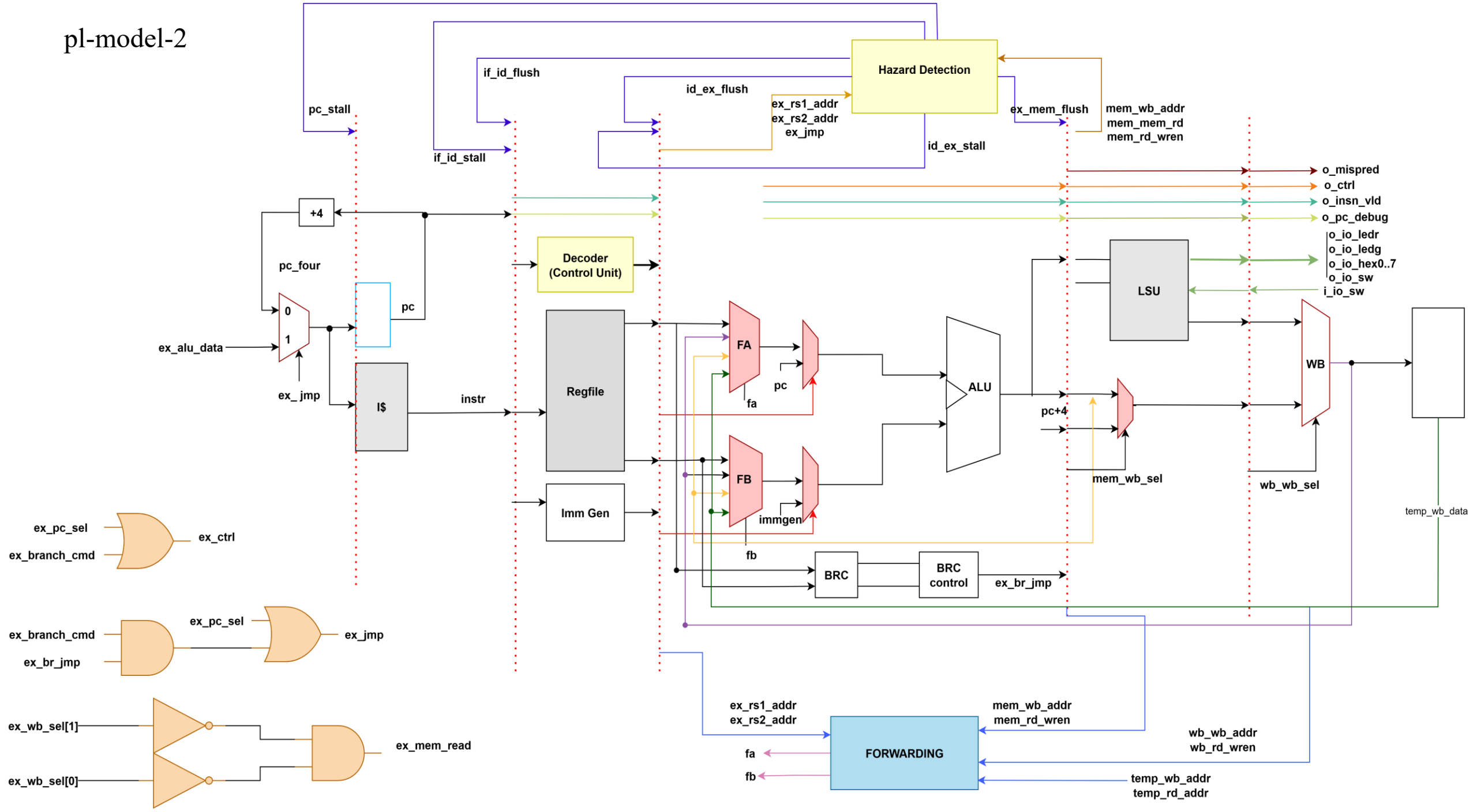
Hazard Detection
if_id_flush
id_ex_flush
pc_stall
if_id_stall
ex_rs1_addr
ex_rs2_addr
ex_jmp
ex_mem_flush
mem_wb_addr
mem_mem_rd
mem_rd_wren
id_ex_stall
o_mispred
o_ctrl
o_insn_vld
o_pc_debug
o_io_ledr
o_io_ledg
o_io_hex0..7
o_io_sw
i_io_sw
+4
pc_four
0
1
ex_alu_data
ex_ jmp
pc
I$
instr
Decoder
(Control Unit)
Regfile
Imm Gen
FA
fa
pc
FB
fb
immgen
ALU
pc+4
LSU
WB
mem_wb_sel
wb_wb_sel
temp_wb_data
BRC
BRC
control
ex_br_jmp
ex_pc_sel
ex_branch_cmd
ex_ctrl
ex_pc_sel
ex_branch_cmd
ex_br_jmp
ex_jmp
ex_wb_sel[1]
ex_wb_sel[0]
ex_mem_read
ex_rs1_addr
ex_rs2_addr
mem_wb_addr
mem_rd_wren
FORWARDING
fa
fb
wb_wb_addr
wb_rd_wren
temp_wb_addr
temp_rd_addr

pl-model-3

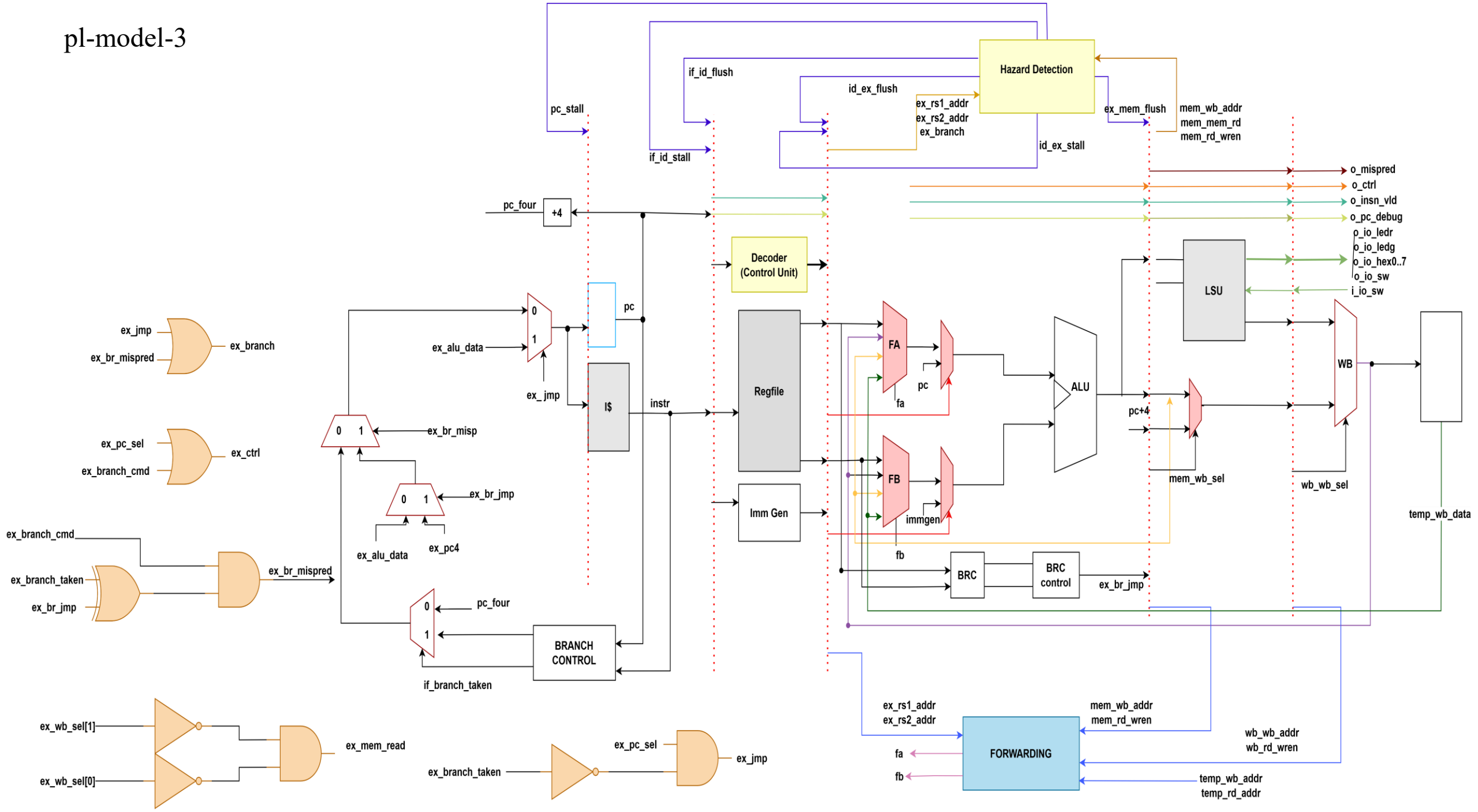
Hazard Detection
if_id_flush
id_ex_flush
pc_stall
if_id_stall
ex_rs1_addr
ex_rs2_addr
ex_branch
ex_mem_flush
id_ex_stall
mem_wb_addr
mem_mem_rd
mem_rd_wren
o_mispred
o_ctrl
o_insn_vld
o_pc_debug
o_io_ledr
o_io_ledg
o_io_hex0..7
o_io_sw
i_io_sw
pc_four
+4
Decoder
(Control Unit)
LSU
pc
ex_alu_data
ex_jmp
I$
instr
Regfile
FA
fa
pc
ALU
WB
pc+4
mem_wb_sel
wb_wb_sel
temp_wb_data
ex_jmp
ex_br_mispred
ex_branch
ex_br_misp
ex_pc_sel
ex_branch_cmd
ex_ctrl
ex_br_jmp
ex_alu_data
ex_pc4
FB
immgen
fb
Imm Gen
BRC
BRC
control
ex_br_jmp
ex_branch_cmd
ex_branch_taken
ex_br_jmp
ex_br_mispred
pc_four
BRANCH
CONTROL
if_branch_taken
ex_rs1_addr
ex_rs2_addr
mem_wb_addr
mem_rd_wren
wb_wb_addr
wb_rd_wren
fa
fb
FORWARDING
temp_wb_addr
temp_rd_addr
ex_wb_sel[1]
ex_wb_sel[0]
ex_mem_read
ex_branch_taken
ex_pc_sel
ex_jmp

pl-model-4

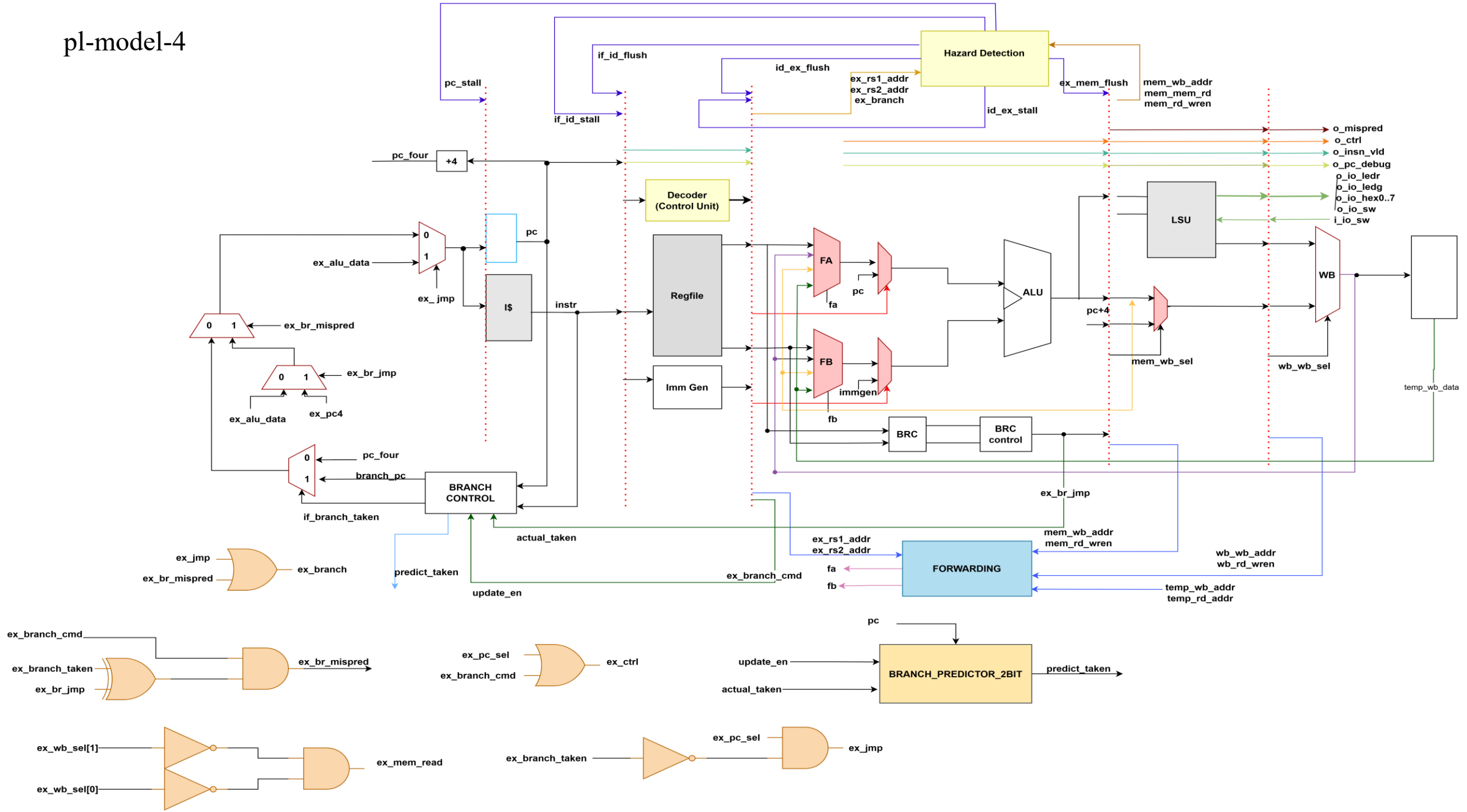
Hazard Detection
pc_stall
if_id_flush
if_id_stall
id_ex_flush
ex_rs1_addr
ex_rs2_addr
ex_branch
id_ex_stall
ex_mem_flush
mem_wb_addr
mem_mem_rd
mem_rd_wren
o_mispred
o_ctrl
o_insn_vld
o_pc_debug
o_io_ledr
o_io_ledg
o_io_hex0..7
o_io_sw
i_io_sw
pc_four
+4
Decoder
(Control Unit)
LSU
pc
ex_alu_data
ex_ jmp
I$
instr
Regfile
FA
fa
pc
ALU
WB
pc+4
ex_br_mispred
FB
fb
immgen
mem_wb_sel
wb_wb_sel
temp_wb_data
ex_br_jmp
Imm Gen
ex_alu_data
ex_pc4
BRC
BRC
control
pc_four
branch_pc
BRANCH
CONTROL
if_branch_taken
ex_br_jmp
actual_taken
ex_rs1_addr
ex_rs2_addr
mem_wb_addr
mem_rd_wren
ex_jmp
ex_br_mispred
ex_branch
predict_taken
ex_branch_cmd
fa
fb
FORWARDING
wb_wb_addr
wb_rd_wren
update_en
temp_wb_addr
temp_rd_addr
ex_branch_cmd
ex_branch_taken
ex_br_jmp
ex_br_mispred
ex_pc_sel
ex_branch_cmd
ex_ctrl
pc
update_en
actual_taken
BRANCH_PREDICTOR_2BIT
predict_taken
ex_wb_sel[1]
ex_wb_sel[0]
ex_mem_read
ex_branch_taken
ex_pc_sel
ex_jmp

pl-model-5

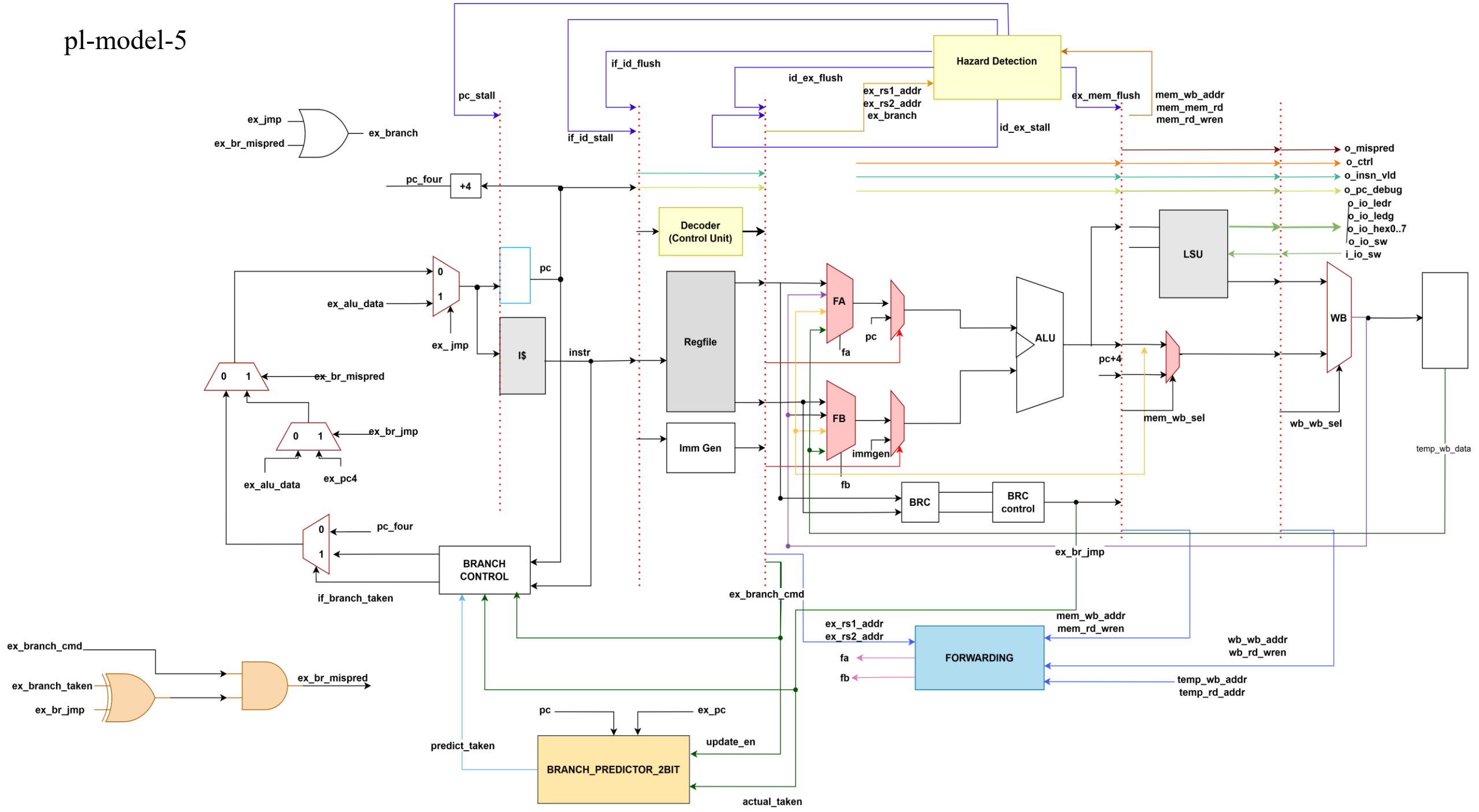
Hazard Detection
if_id_flush
id_ex_flush
pc_stall
if_id_stall
ex_rs1_addr
ex_rs2_addr
ex_branch
ex_mem_flush
id_ex_stall
mem_wb_addr
mem_mem_rd
mem_rd_wren
ex_jmp
ex_br_mispred
ex_branch
pc_four
+4
Decoder
(Control Unit)
o_mispred
o_ctrl
o_insn_vld
o_pc_debug
o_io_ledr
o_io_ledg
o_io_hex0..7
o_io_sw
i_io_sw
LSU
pc
ex_alu_data
ex_ jmp
I$
instr
Regfile
FA
fa
pc
ALU
WB
pc+4
mem_wb_sel
wb_wb_sel
temp_wb_data
ex_br_mispred
ex_br_jmp
ex_alu_data
ex_pc4
FB
immgen
fb
Imm Gen
BRC
BRC
control
pc_four
BRANCH
CONTROL
if_branch_taken
ex_br_jmp
ex_branch_cmd
ex_rs1_addr
ex_rs2_addr
mem_wb_addr
mem_rd_wren
FORWARDING
fa
fb
wb_wb_addr
wb_rd_wren
temp_wb_addr
temp_rd_addr
ex_branch_cmd
ex_branch_taken
ex_br_jmp
ex_br_mispred
pc
ex_pc
predict_taken
update_en
BRANCH_PREDICTOR_2BIT
actual_taken