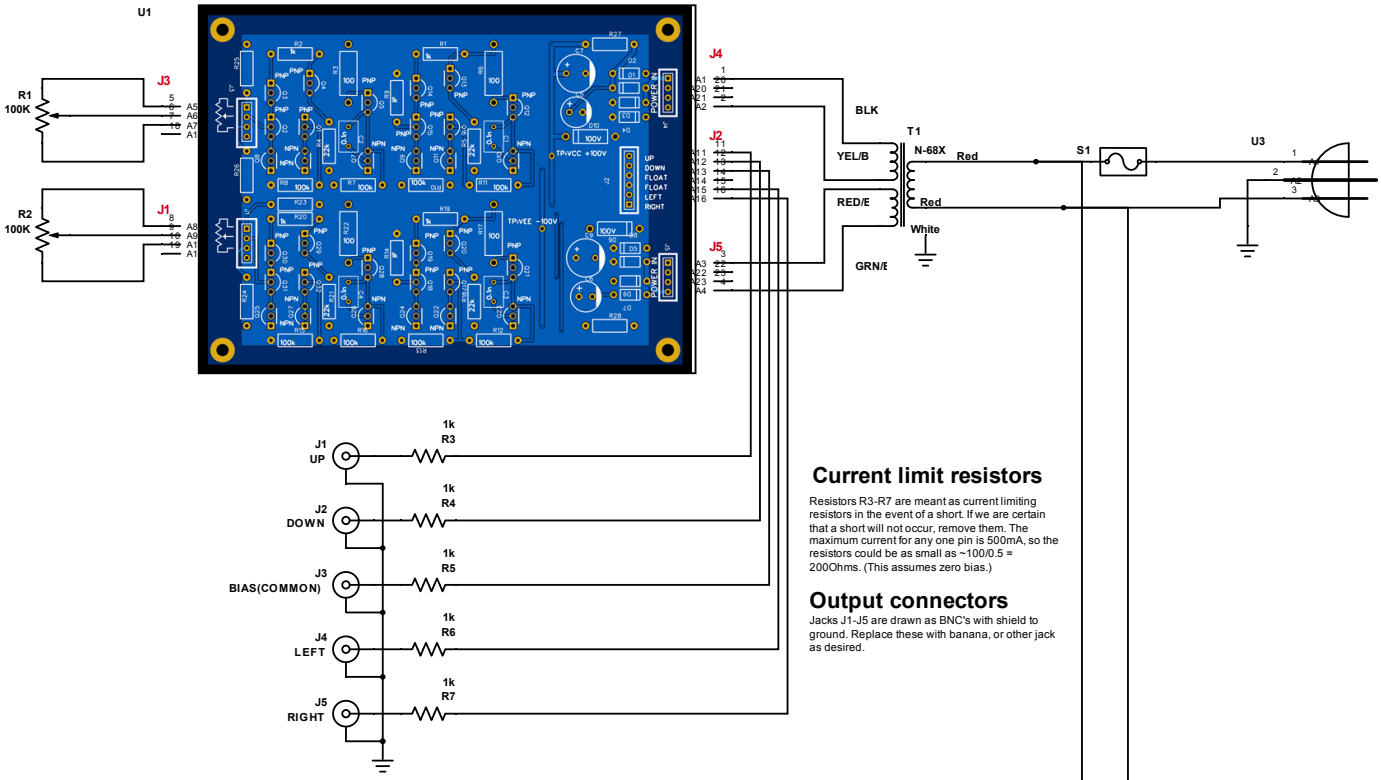

Current limit resistors

Resistors R3-R7 are meant as current limiting resistors in the event of a short. If we are certain that a short will not occur, remove them. The maximum current for any one pin is 500mA, so the resistors could be as small as ~100/0.5 = 200Ohms. (This assumes zero bias.)

Output connectors

Jacks J1-J5 are drawn as BNC's with shield to ground. Replace these with banana, or other jack as desired.

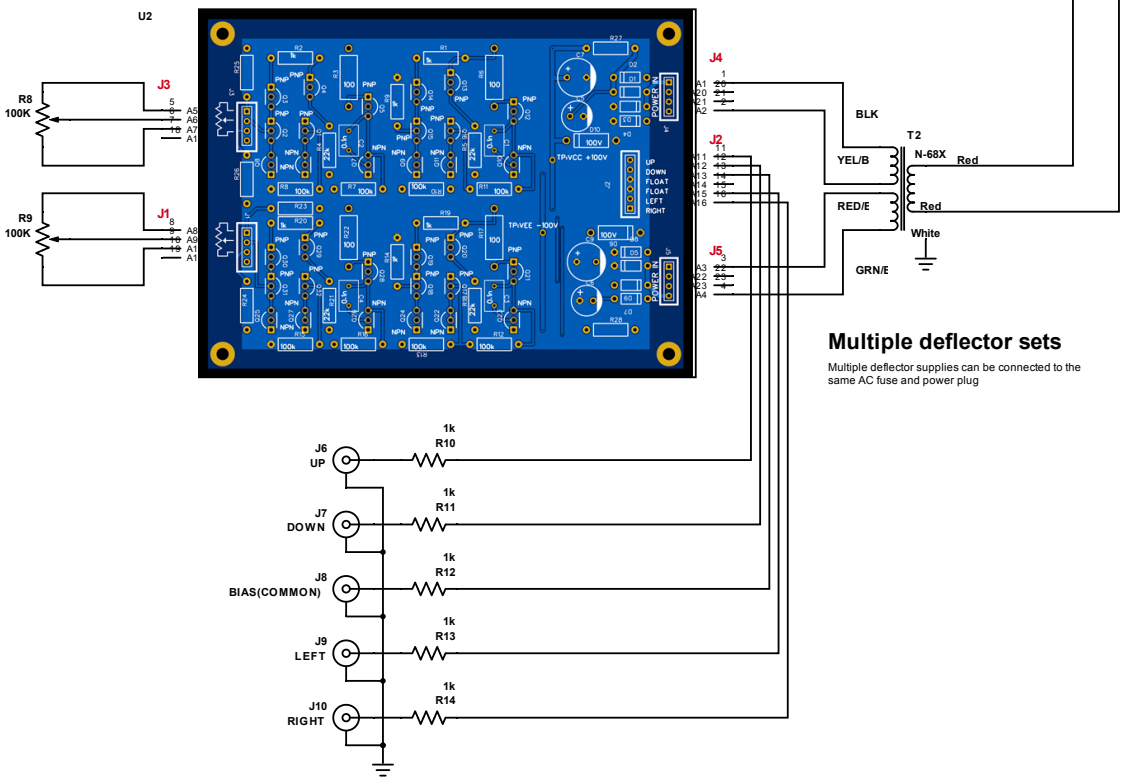

Multiple deflector sets

Multiple deflector supplies can be connected to the same AC fuse and power plug