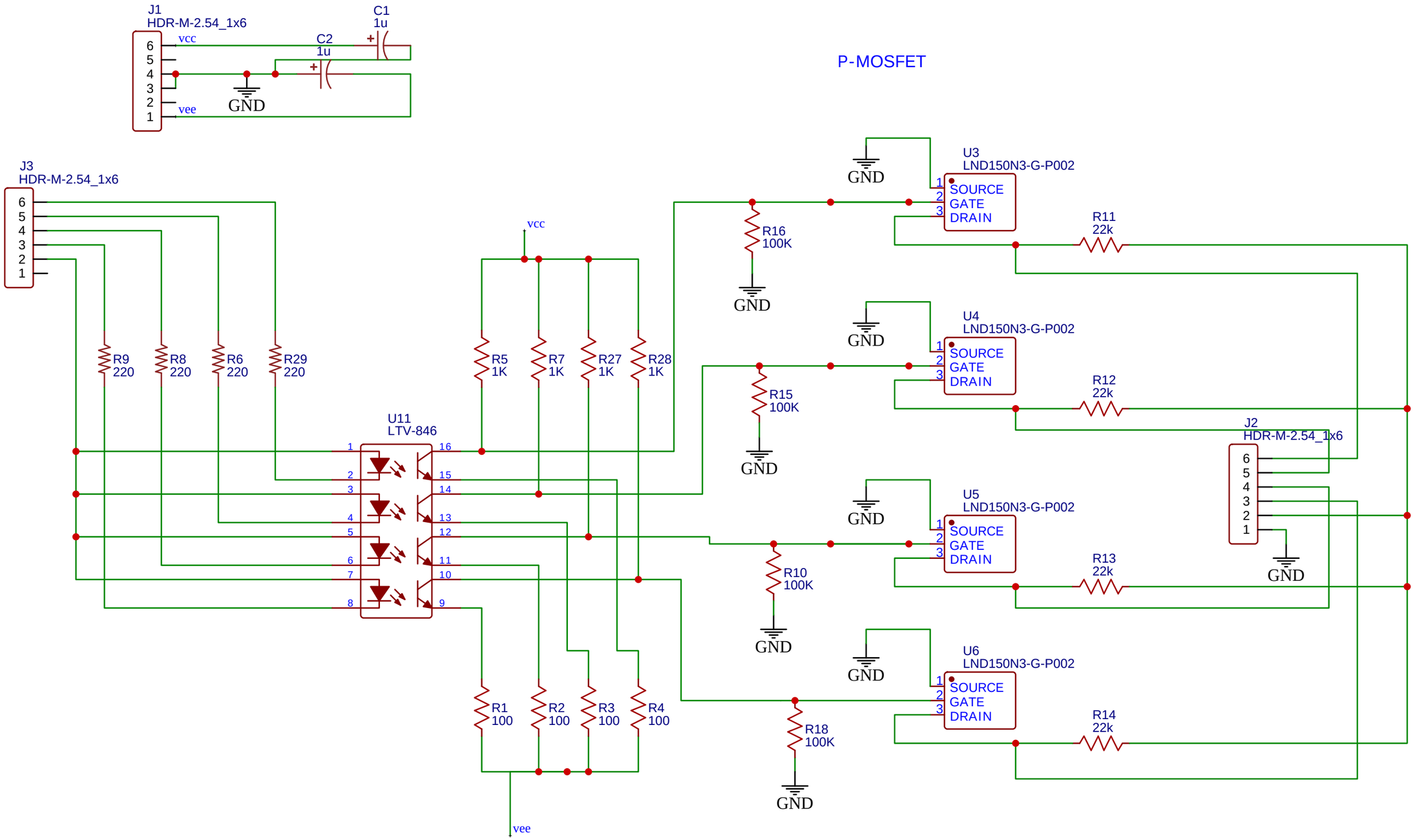

TITLE: QUAD BAR DRIVER		REV: 1.0
EasyEDA	Company: Your Company	Sheet: 1/1
	Date: 2024-01-24 Drawn By: tranthamkw350	