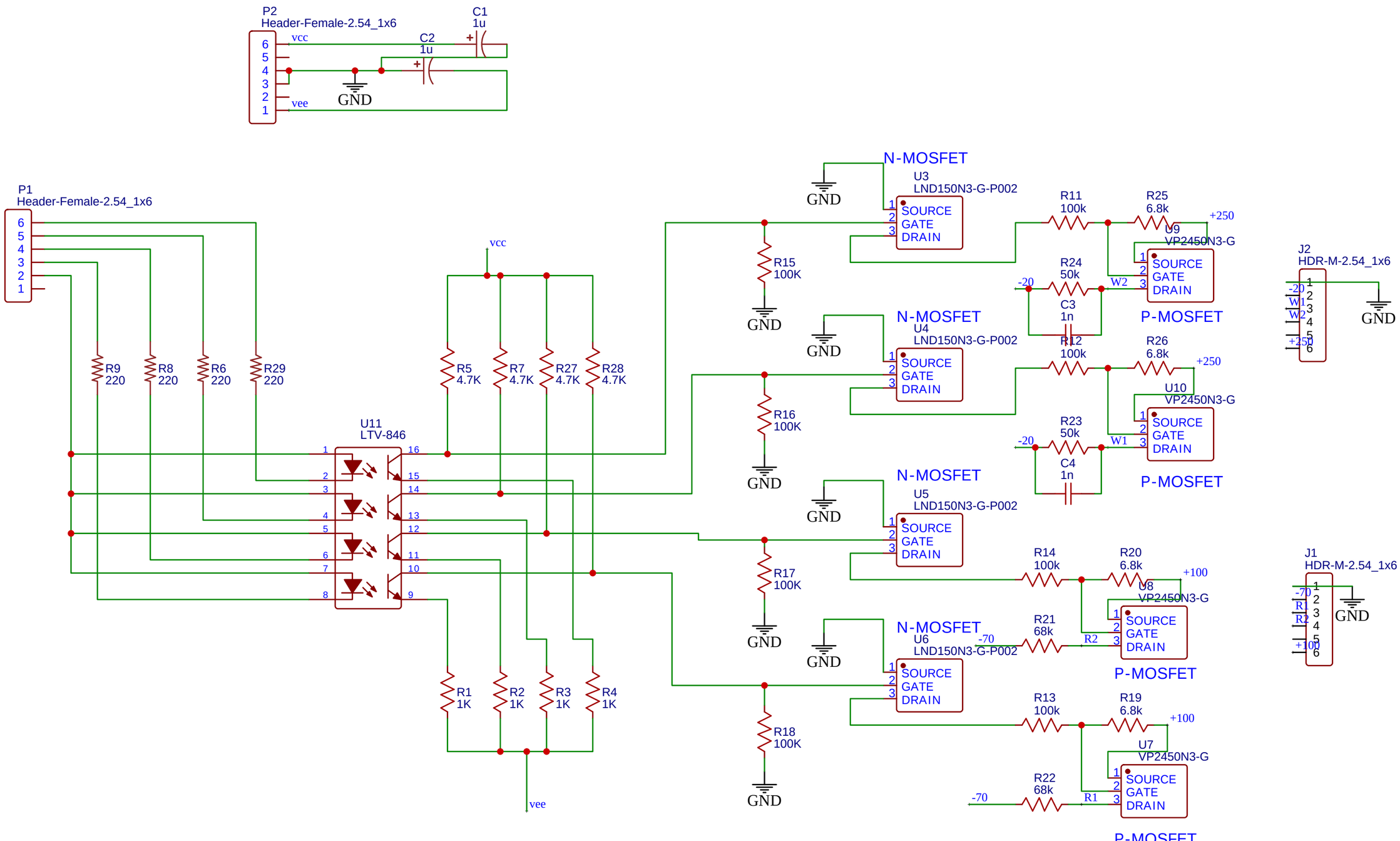

TITLE: READ/WRITE DRIVER

REV: 1.0

Company: Your Company

Sheet: 1/1

Date: 2024-01-24

Drawn By: tranthamkw350

+100

+100