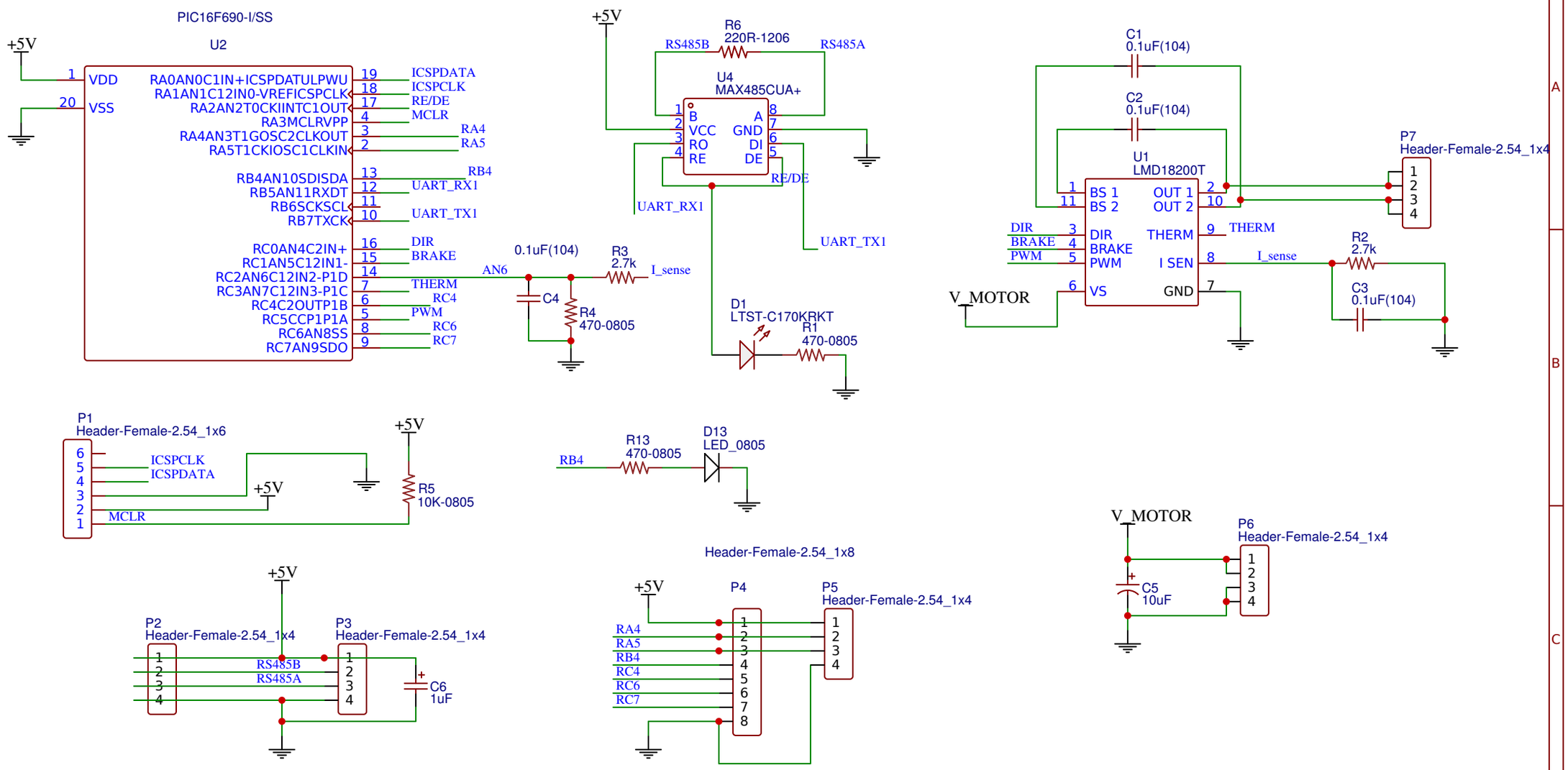

TITLE: RS485 to LMD18200 motor control	REV: 1.0
Date: 2018-12-30	Sheet: 1/1
EasyEDA V5.8.22	Drawn By: tranthamkw350