POWER SUPPLY

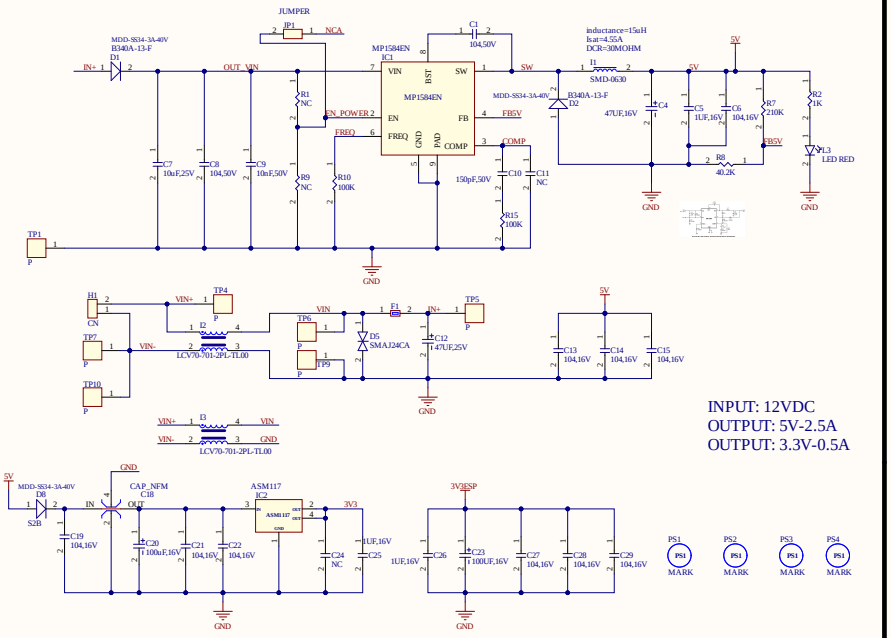

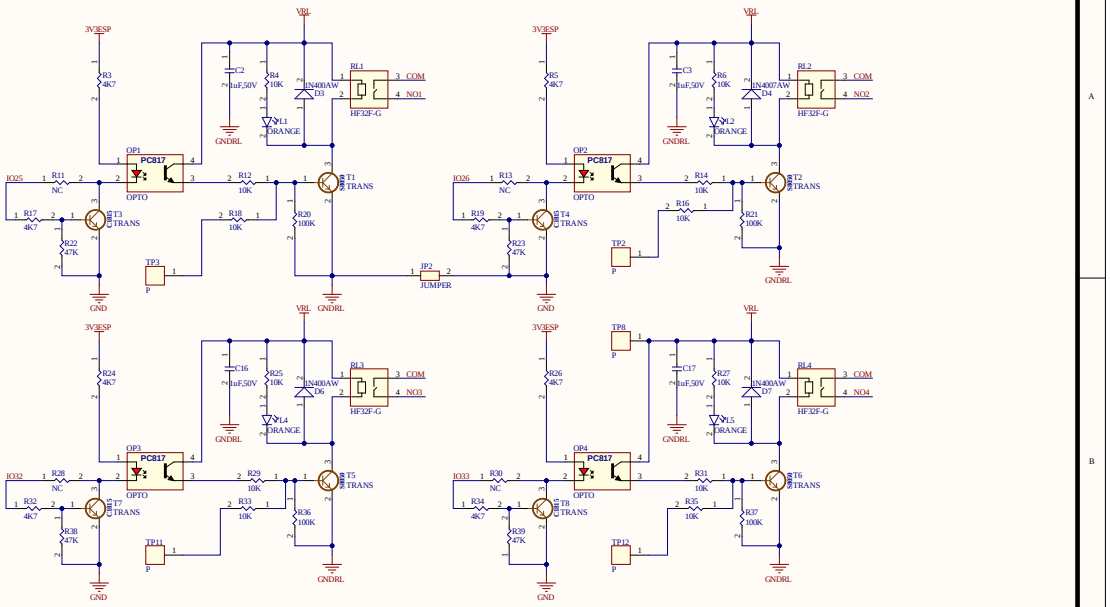

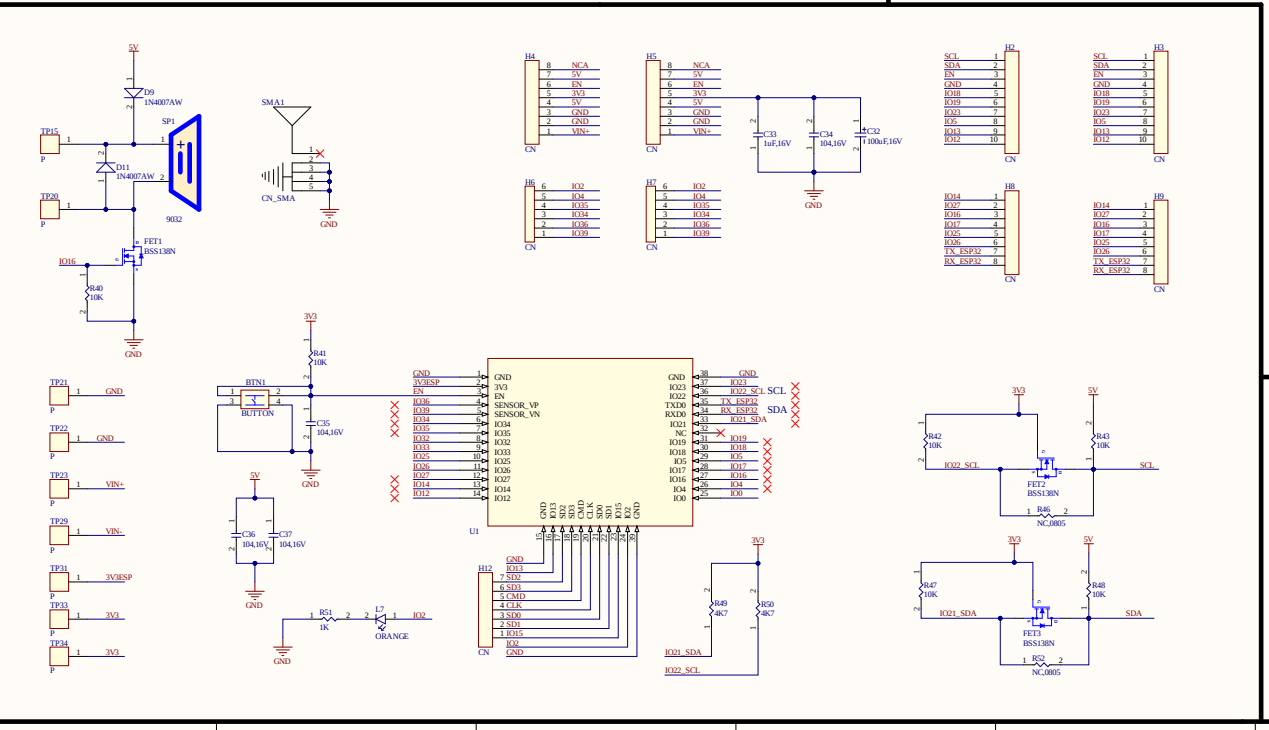

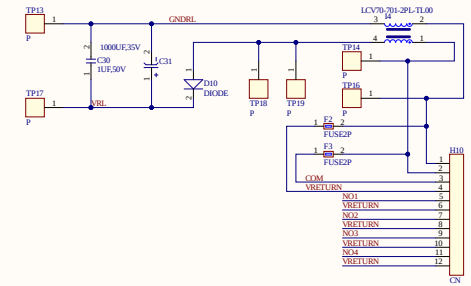

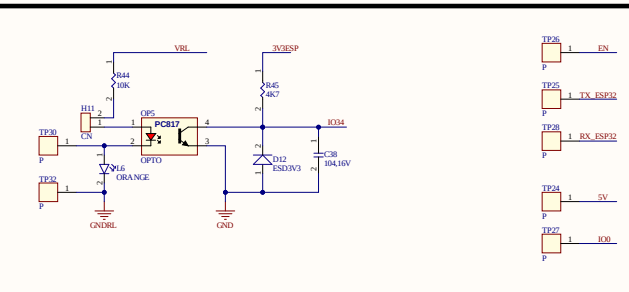

Title	*
Size: A2	Number:* Revision:*
Date: 8/5/2022	Time: 12:05:06 AM Sheet * of 1
File:	D:\tepbac\PCB_TEPBAC\ENVISOR\ESP32\ENV_V5\ESP32_ENV_V5\SCHEMATIC.SchDoc

Altium

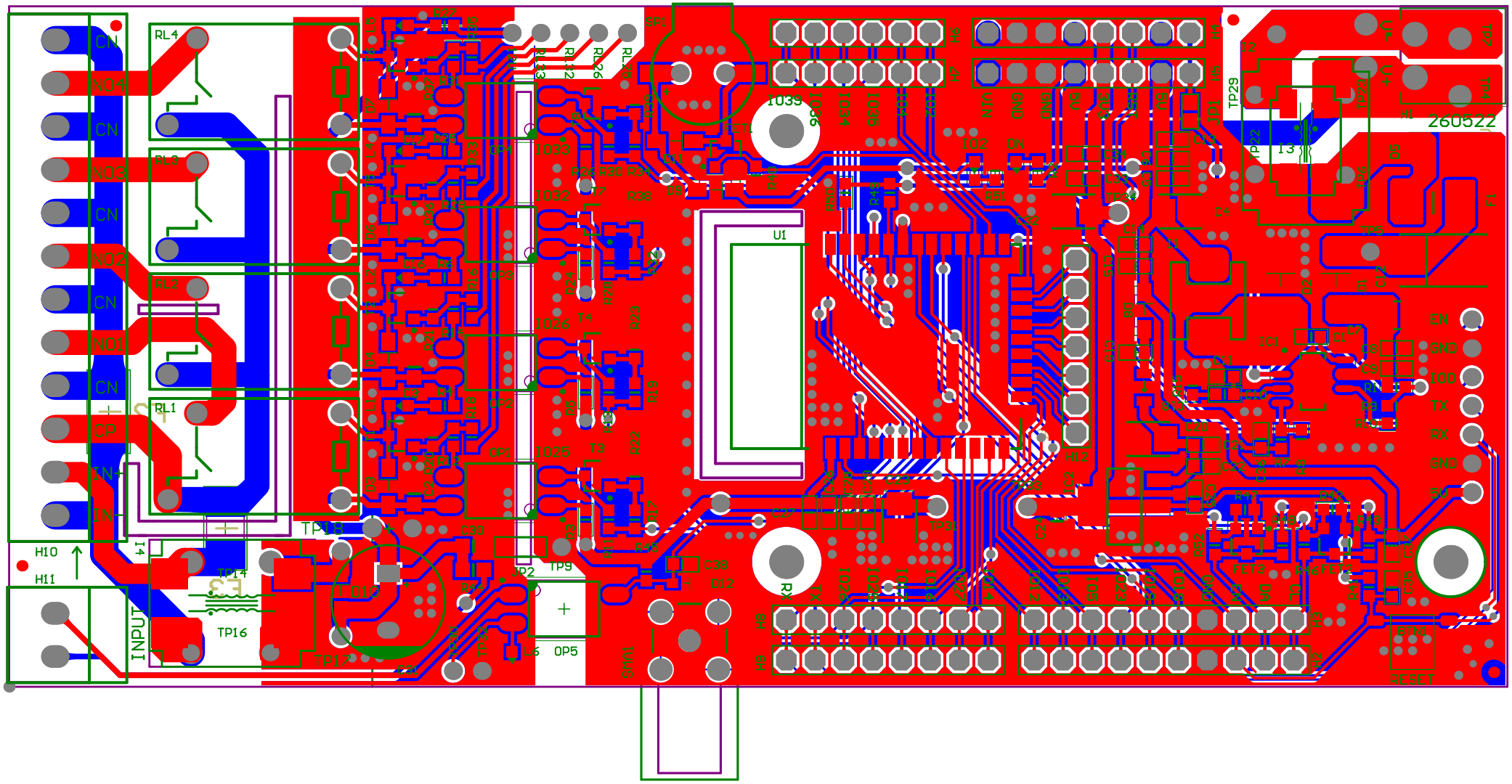

RL4
RL3
RL2
RL1
CN
NO4
NO3
NO2
NO1
CP
IN+
IN-
H10
H11
INPUT
TP18
TP14
TP16
TP9
OP5
U1
TP29
260522
EN
GND
IO0
TX
RX
GND
RESET

Comment	Description	Designator	Footprint	LibRef	Part Number	ProjectName	Quantity	UniqueIdHash
BUTTON		RTN1	RTN_4VMM	RTN4P		ESP32_ENV_V5.PrPcb	1	KDLHHGSW
10kI.00V		C1, C8	cap_smd_0603	CAPACITOR		ESP32_ENV_V5.PrPcb	2	HQF6ODDH, WYFADGG
1uF,50V		C2, C3, C16, C17, C30	cap_smd_0805	CAPACITOR		ESP32_ENV_V5.PrPcb	5	ST7NJWWN, 6GCLWKAW, GNMR4YMC, GRWPEDT, ABBLAYQV
47UF,16V		C4	CAP_TAN_B	CAP_TAN		ESP32_ENV_V5.PrPcb	1	DACWSHJ4
1UF,16V		C5, C20, C26, C33	cap_smd_0603	CAPACITOR		ESP32_ENV_V5.PrPcb	4	SMCRKNNL, 6DDAY4W, RSMCBHL, M6BQQ2G
104,16V		C6, C13, C18, C19, C23, C24, C27, C28, C36, C38, C39, C37, C38	cap_smd_0603	CAPACITOR		ESP32_ENV_V5.PrPcb	16	YMTPWYJ, GHVR5QAM6, NX2LVAPU, WM2ZGK0, RKENDNHG, DQCBAYY, DDDDYHE, WVEVGNA, 4BLUMYGG, GWCMEC9, GMHYVEL, G3BEC4HU, LUBTAHW, SEXLKSY, CRNLRSJG
10uF,25V		C7	CAP_SMD_1210	CAPACITOR		ESP32_ENV_V5.PrPcb	1	TJTGPYWV
10nf.50V		C9	cap_smd_0603	CAPACITOR		ESP32_ENV_V5.PrPcb	1	T4EPWCU
150pF,50V		C10	cap_smd_0603	CAPACITOR		ESP32_ENV_V5.PrPcb	1	UNHDALG3
NC		C11	cap_smd_0603	CAPACITOR		ESP32_ENV_V5.PrPcb	1	DGDDVKH3
47UF,25V		C12	CAP_TAN_D	CAP_TAN		ESP32_ENV_V5.PrPcb	1	GWS9MJCP
CAP_NPM		C14	NPM1DF1206-LEAD	CAP_NPM		ESP32_ENV_V5.PrPcb	1	NDWLUCU6
100uF,16V		C25, C31, C32	CAP_TAN_B	CAP_TAN		ESP32_ENV_V5.PrPcb	3	RRNNVMK, NRSLL7I, QXEQYMM
NC		C29	cap_smd_0603	CAPACITOR		ESP32_ENV_V5.PrPcb	1	9FTSCRRW
1000UF,35V		C35	CAP_POL_DIP	CAP_ALU		ESP32_ENV_V5.PrPcb	1	6SBHGKFA
B360A-13-F		D1, D2	diode_smd_DO-214AC	DIODE		ESP32_ENV_V5.PrPcb	2	2TRMLDT, 5TSUBHEJ
1N4004W		D3, D6, D7	DIODE_SMD_SOD_123	DIODE		ESP32_ENV_V5.PrPcb	3	DKQERYC, HNLUTVPA, MKDDNGB9
1N4007AW		D4, D8, D11	DIODE_SMD_SOD_123	DIODE		ESP32_ENV_V5.PrPcb	3	6NZNDJN, RWCMALM, KUFQRBA
SMAJ24CA		D5	TVS_214AC	TVS_DIODE		ESP32_ENV_V5.PrPcb	1	MLBRNMT
1N4148W		D9	DIODE_SMD_SOD_123	DIODE		ESP32_ENV_V5.PrPcb	1	NWDTTHH
1N4004		D10	DIODE_SMD_SOD-323	DIODE		ESP32_ENV_V5.PrPcb	1	MJRFGDRF
ES2JW3		D12	DIODE_SMD_SOD_323	DIODE		ESP32_ENV_V5.PrPcb	1	HFWJF3EX
		F1	fuse_1812	FUSE		ESP32_ENV_V5.PrPcb	1	DSTMCAD
SJS2F		F2, F3	fuse_1812	FUSE		ESP32_ENV_V5.PrPcb	2	MKPNDGN, HNPQDDL
BSS138N		INT1, INT2, INT3	BSS138_N	BSS138_TYPE_N		ESP32_ENV_V5.PrPcb	3	7TTPCGE, INCCVY, XTGWWMT
CN		J1	TSSOP_360MM	Cat1p		ESP32_ENV_V5.PrPcb	1	RYNCMRA
CN		J2, J12	40HSP_C_7	40HSP		ESP32_ENV_V5.PrPcb	2	LSDHTGY, SUTTSCZ
CN		J4, J5, J6, J8	8HSP_C_7	Hs61p		ESP32_ENV_V5.PrPcb	4	AVNFXWVQ, GYQECWG, MVJMMBFQ6G, YAMEUCZ
CN		J45, J47	6HSP_C_7	Hs61p		ESP32_ENV_V5.PrPcb	2	LWTTHCGF, GWDCQBA
CN		J410	1X12_VER_3MM	12HSP		ESP32_ENV_V5.PrPcb	1	AAMWJQHW
CN		J411	1x2P_TER_3MM	Cat1p		ESP32_ENV_V5.PrPcb	1	HWWRMMN
CN		J412	7HSP_7	7Hs1p		ESP32_ENV_V5.PrPcb	1	RHDYXJB
SMD-0630	INDUCTOR 10nT,600,630 mA/30E 42mΩ/7	l1	0630	INDUCTOR		ESP32_ENV_V5.PrPcb	1	BPLRYDRE
CC1770-701-ES-TUBE		l1, l4	ACM12V-701-ES-TUBE	SUSX_CM_C		ESP32_ENV_V5.PrPcb	2	RZTBFAH, BCZRQUP
CC1770-701-ES-TUBE		l3	CC1770-701-ES-TUBE	SUSX_CM_C		ESP32_ENV_V5.PrPcb	1	DPTBZWP
MP1584EN		L1	MP1584EN-LF	MP1584EN-LF		ESP32_ENV_V5.PrPcb	1	UWYWNOV
ASM1117		LD2	ASM1117	ASM1117		ESP32_ENV_V5.PrPcb	1	MCYVWG
JUMPER		LP1, JP2	jum_power	JP_POWER		ESP32_ENV_V5.PrPcb	2	4NJWCPY, MMBNDHP
GRANGE		L3, L2, L4, L5, L6, L7	led_0603_blue	LED		ESP32_ENV_V5.PrPcb	6	NLMEGNL, 2R4EJUB, PYDEFWF, J4BYGYSB, HJYDTYM, ABFDWDM
LED-RED		L9	led_0603_blue	LED		ESP32_ENV_V5.PrPcb	1	BSFDAC
OPTO		OP1, OP2, OP3, OP4, OP5	PC817_SMD	PC817		ESP32_ENV_V5.PrPcb	5	MMEXSYS, DMJPN7U3, CGRBAWGJ, FACBBWN, HAPPGJW
M4Hx		PS1, PS2, PS3, PS4	ps1	PS1		ESP32_ENV_V5.PrPcb	4	WVDHDTA, MNEDXHK, LPGWJER3, CSMLYVJ3
RC	resistor	R1, R9, R11, R12, R28, R32	0603_R_L	RESISTOR		ESP32_ENV_V5.PrPcb	6	MDCWMME, MGWWQMR, RMMHWDA, SDWYYBLL, GSCMXUNA, GMLSRJYE
1K	resistor	R2, R51	0603_R_L	RESISTOR		ESP32_ENV_V5.PrPcb	2	NFEBDMDD, 5AEJ7BUF
4K7	resistor	R3, R5, R17, R19, R24, R26, R32, R34, R40, R49, R50	0603_R_L	RESISTOR		ESP32_ENV_V5.PrPcb	13	CNVWWC, CGWPBCL, DYB7JAPL, 6HMHPRM, WHHDVDM, HJCCHHQ, NDCGAFQ, YQGSFAD, WNEJC1C, 4UTAWDV, M3YGHHJ
10K	resistor	R4, R6, R12, R14, R16, R18, R25, R27, R29, R33, R35, R45, R46, R48, R47, R48	0603_R_L	RESISTOR		ESP32_ENV_V5.PrPcb	18	NPNNGWW, WNDAHPA, MKSRKNM7, CMCRRGDM, RQGLOWTE, 7QALRBJD, DWMMDJEE, NQJWTAY, 6GLEDDV, DMMFDMH, FWLUQGR, RABUMUU, TOWNXRT, HHDPKDG, UAEY7MKD, HYLRNZQ, HYRNCMM, 6JYUSCC
330K	resistor	R7	0603_R_L	RESISTOR		ESP32_ENV_V5.PrPcb	1	MDBWJGM
40.2K	resistor	R8	0603_R_L	RESISTOR		ESP32_ENV_V5.PrPcb	1	VWBFQB6I
100K	resistor	R10, R15, R20, R21, R38, R37	0603_R_L	RESISTOR		ESP32_ENV_V5.PrPcb	6	MWCCGD1, TCYWMYU, 4CABCTJ, 7CWQNEC, 5THMJVV, 7MPHEEA
47K	resistor	R22, R23, R36, R39	0603_R_L	RESISTOR		ESP32_ENV_V5.PrPcb	4	3ZEYEEE, UVARNMQ, 6LRK5BL, 7FUJ6EY
10K	resistor	R44	0805_R_L	RESISTOR		ESP32_ENV_V5.PrPcb	1	DQMWHLU
NC,0805	resistor	R46, R52	0603_R_L	RESISTOR		ESP32_ENV_V5.PrPcb	2	6YDHMBM, 6RUBGCW
MF10F-G		R1.1, R1.2, R13, R14	MF10F-G-22C-ESF-G	MF10F-G		ESP32_ENV_V5.PrPcb	4	4CHEZWC, 4BRK2PM, DHCMEYJ, GSRHCEF
CN_SMA		SMA1	SMA_ET03000-GM	CN_SMA		ESP32_ENV_V5.PrPcb	1	NGAOQHZ
W310		SP1	SMD_BU2328	BU2328		ESP32_ENV_V5.PrPcb	1	BLUW9RW
TRANS		T1, T2, T5, T6	SB550	SB550		ESP32_ENV_V5.PrPcb	4	3ZNTGSD, 4RBXGSD, 1ATBMOW, GRBUHZF
TRANS		T3, T4, T7, T8	C1815	C1815		ESP32_ENV_V5.PrPcb	4	5JCUDAD, 6DOQNWO, 6J3RWPW, 6WMDQTW6
IC		TP1, TP2, TP3, TP4, TP5, TP6, TP7, TP8, TP9, TP10, TP11, TP12, TP13, TP14, TP15, TP16, TP17, TP18, TP19, TP20, TP21, TP22, TP23, TP24, TP25, TP26, TP27, TP28, TP29, TP30, TP31, TP32, TP33, TP34	TP	TP		ESP32_ENV_V5.PrPcb	34	RBBCJWP, 4SKEDVU, 4CWQGWY, 6SGDMDB, 5CTCDNC, DADMKGA, WAMTTYY, NJQWQLJW, 4DTCNMP, MHCUPPM, WWEUWAK, 6YBEJJB, 6YBEXCT, 6NQNKFM, 5HCMEWC, 3ZWFDHA, 6UMKCRY, 6EQDFWG, 6DHCCBPA, TUWPCGL, UMPDD4C, 5UNJMDG5, 6WSWEQS, TGWDFUF, 6VVLJLU, 6ADDRBY, 4NWYMDB, U4JQCT7
ESP32-WROOM-32	ESP32	U1	ESP32-WROOM-32D	ESP32-WROOM-32	ESP32-WROOM-32	ESP32_ENV_V5.PrPcb	1	MWHYGDF