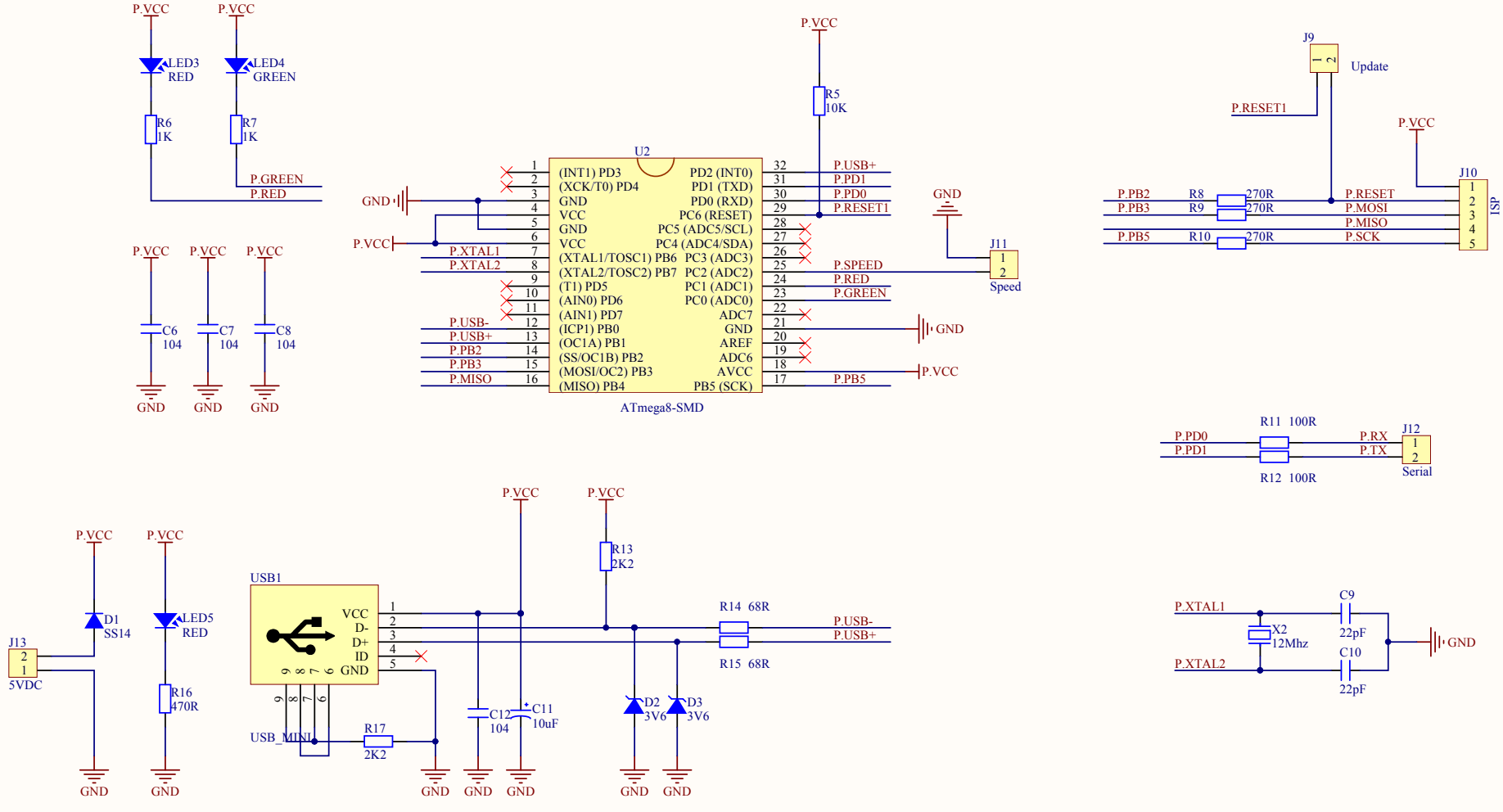

Title *AVR Programmer*		Vnelektronics Co.,Ltd 776 Ton Duc Thang Lien Chieu, Da Nang * *
Size: A4	Number:*	Revision:1.0
Date: 6/27/2014	Time: 3:27:54 PM	Sheet01 of 02
File: E:\Dropbox\Projects\AVR\AVR16\AVR Programmer.SchDoc		

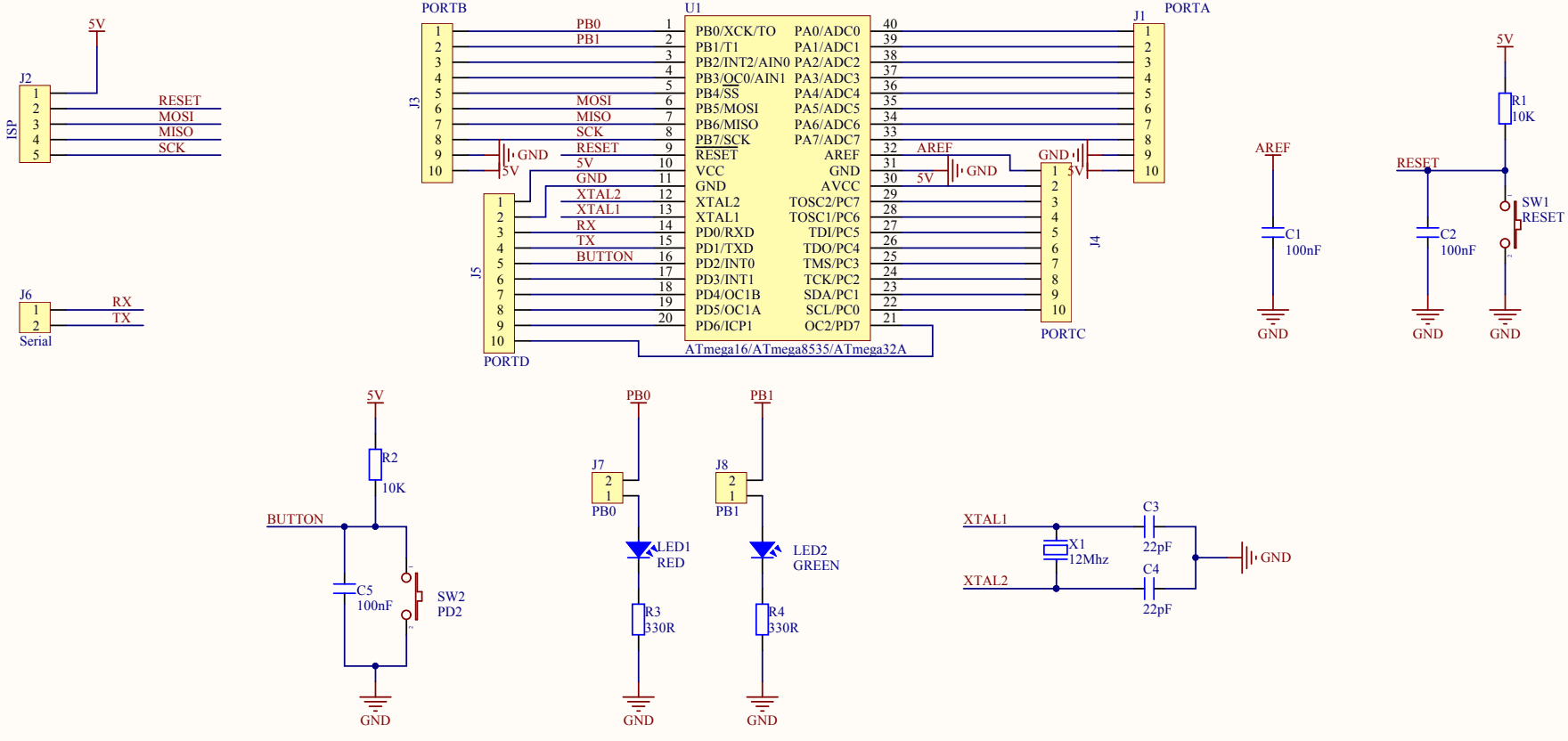

Title	*AVR SUMMER*		*Vnelektronics Co.,Ltd* *776 Ton Duc Thang* *Lien Chieu, Da Nang* * *
Size: A4	Number:*	Revision:1.0	
Date: 6/27/2014	Time: 3:27:56 PM	Sheet02 of 02	
File: E:\Dropbox\Projects\AVR\AVR16\AVR16 BlueBoard.SchDoc			

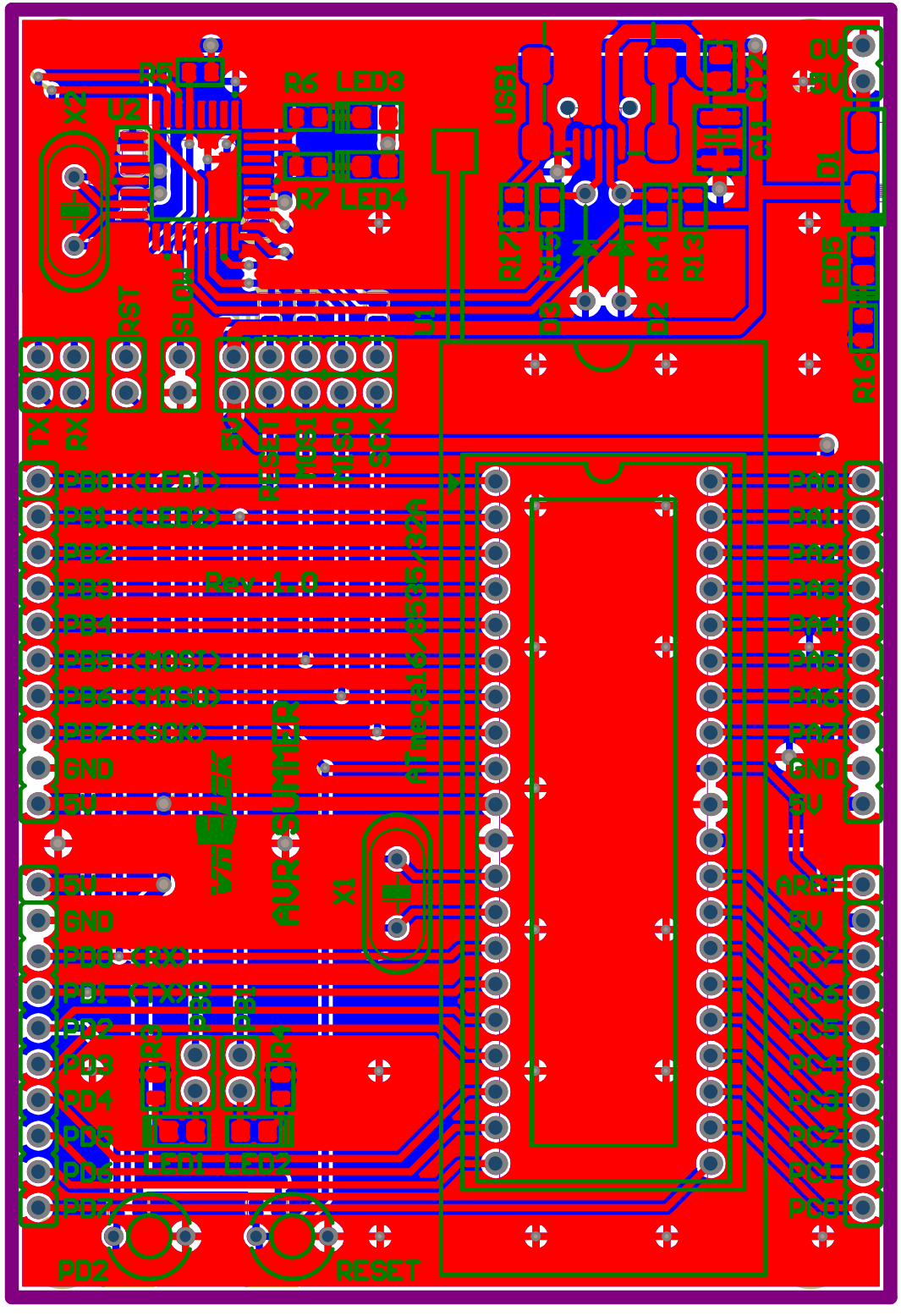

R5
R6
LED3
R7
LED4
USB1
R17
R15
R14
R13
D2
D1
LED5
R16
RST
SLOW
TX
RX
PD0 (LED1)
PD1 (LED2)
PD2
PD3
PD4
PD5 (MOSI)
PD6 (MISO)
PD7 (SCK)
GND
5V
PD0 (RX)
PD1 (TX)
PD2
PD3
PD4
PD5
PD6
PD7
PD2
RESET
PA0
PA1
PA2
PA3
PA4
PA5
PA6
PA7
GND
5V
AREF
5V
PC7
PC6
PC5
PC4
PC3
PC2
PC1
PC0
Rev 1.0
AUR SUMMER
X1

Comment	Description	Designator	Footprint	LibRef	Quantity
100nF	Cap np 1pF - 472pF	C1, C2, C5	C0805	CN1	3
22pF	Cap np 1pF - 472pF	C3, C4, C9, C10	C0603	CN1	4
104	Cap np 104 => 105pF	C6, C7, C8, C12	C0805	CN2	4
10uF	Cap P 0,1uF < 22uF , 16 - 50V	C11	C1210	CP1	1
SS14	Diode 1A	D1	SS14	D1A	1
3V6	Diode Zenner	D2, D3	1N5223	DZ	2
PORTA	Header 10	J1	Header_10	Hed10	1
ISP	Header 5 (Green)	J2, J10	Header_5	Hed5	2
PORTB	Header 10	J3	Header_10	Hed10	1
PORTC	Header 10	J4	Header_10	Hed10	1
PORTD	Header 10	J5	Header_10	Hed10	1
Serial	Header 2 (Green)	J6, J12	Header_2	Hed2	2
PB0	Header 2 (Green)	J7	Header_2	Hed2	1
PB1	Header 2 (Green)	J8	Header_2	Hed2	1
Update	Header 2 (Green)	J9	Header_2	Hed2	1
Speed	Header 2 (Green)	J11	Header_2	Hed2	1
5VDC	Header 2 (Green)	J13	Header_2	Hed2	1
RED	LED Single colour Green and Red	LED1, LED3	Led 0805R	LED	2
GREEN	LED Single colour Green and Red	LED2, LED4	Led 0805G	LED	2
RED	LED Single colour Green and Red	LED5	Led 0805G	LED	1
Res2	Resistor	R1, R2, R3, R4, R5, R6, R7, R8, R9, R10, R11, R12, R13, R14, R15, R16, R17	RESC2012(0805)	Res2	17
RESET	Switch button 2 pin	SW1	BUTTON 2PIN TRON	SW2	1
PD2	Switch button 2 pin	SW2	BUTTON 2PIN TRON	SW2	1
ATmega16/ATmega8535 /ATmega32A	8-Bit AVR Microcontroller with 16K Bytes of In-System Programmable Flash Memory	U1	de gat xanh dip 40	Atmega16L	1
ATmega8-SMD	High-performance, Low-power Atmel ® AVR ® 8-bit Microcontroller	U2	ATMEGA_8_SMD	ATmega8_SMD_32pin	1
USB_MINI		USB1	USBMNIB	USB_MINI	1
12Mhz	Crystal For all Crystal 2p	X1, X2	CRYSTAL	XT2	2