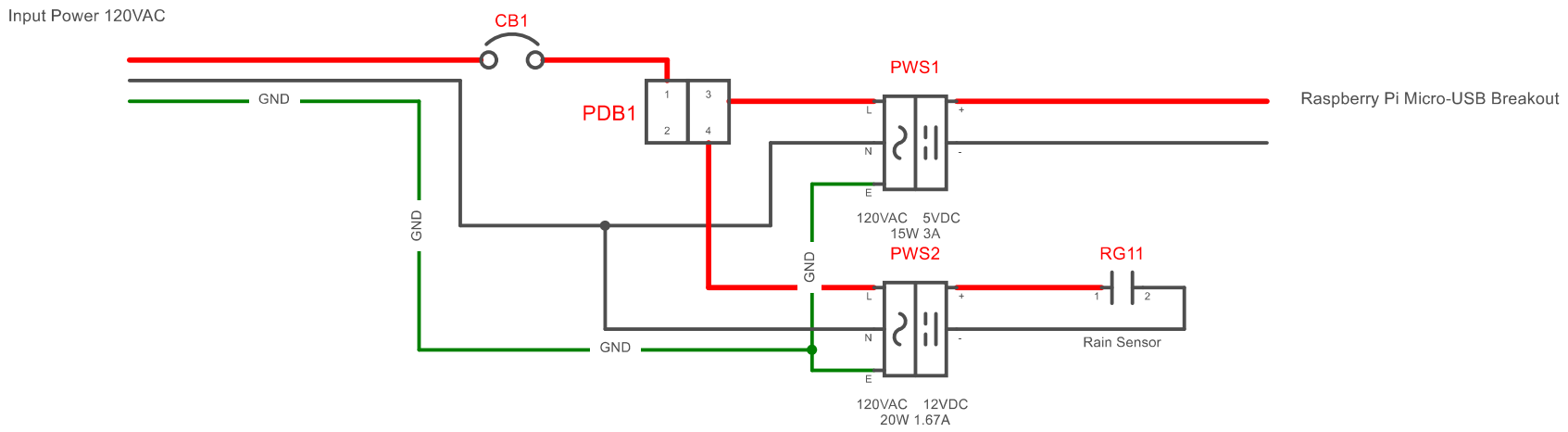

					Prj: Weather Station	Sheet nb. 1 of 1
					Prj nb: 1	Desg. by:
A				Open	Title:	
Rev.	Date	Description	Appd. by	Status		