PADDOCK
POOL EQUIPMENT COMPANY

Fast Track Starting Platform

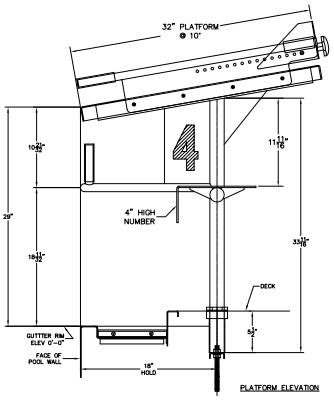

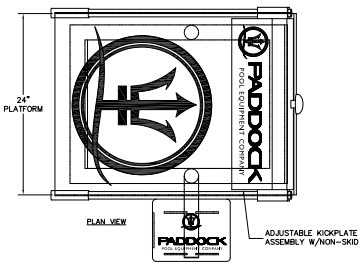

Paddock's **Fast Track Starting Platform** is quickly and easily removable.

The platform shall be side mounted and have a 24" wide x 32" long stainless steel top.

Flush with front edge of platform is a backstroke starting bar. There are also two vertical backstroke grips made of stainless steel positioned 15" on center.

Lane numbers will be visible from all four sides of platform.

On top of starting platform shall be equipped with side rails made from 1" O.D. stainless steel tube welded to 1/8" stainless steel plate.

Mounted to side rails will be a removable "wedge" made of 12 gauge, stainless steel with a 45 degree incline on the surface facing forward to pool. Front surface shall have a non-slip surface. The wedge will use spring loaded plunger pins to lock securely into place. Single mechanism will be used to retract both pins simultaneously with one hand for ease of adjustment. Wedge shall slide uninhibited along guide rails on sides of platform.

Top of starting platform shall be with a non-slip solid surface.

Colors and custom logos are available as options.

Anchors with 19" spacing are sold separately, P/N 9400110, Model 4912-A.

P/N 9400115, Model 4912, Type 304, Qty ___ ___

P/N 9400113 Model 4912, Type 316L, Qty 6

555 Paddock Parkway, Rock Hill, SC 29730 T: 800-849-2729 F: 803-324-1116

www.paddockindustries.com