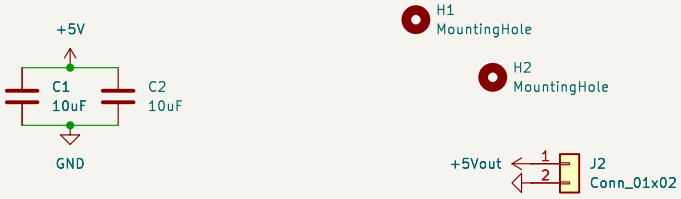

usb-c

File: usb.kicad_sch

Buck up

File: buck.kicad_sch

File: charing.kicad_sch

Sheet: /
File: imponatorPower.kicad_sch

Title:

Size: A4	Date:	**Rev:**
KiCad E.D.A. 9.0.7		Id: 1/4

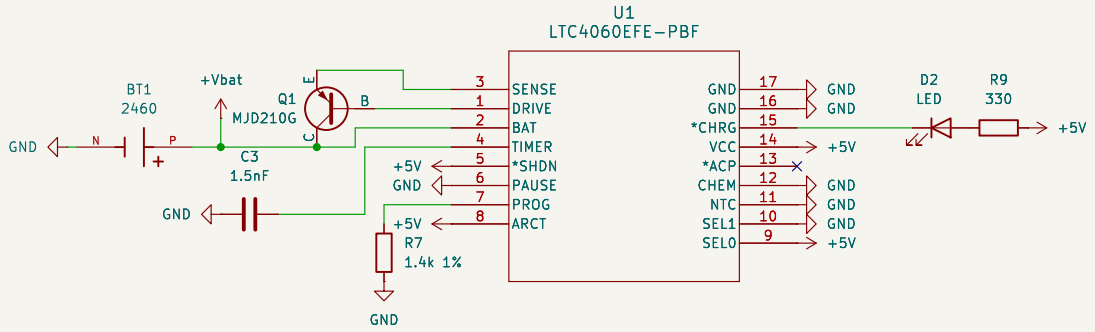

Sheet: /Charging circuit/
File: charing.kicad_sch

Title:

Size: A4	Date:	**Rev:**
KiCad E.D.A. 9.0.7		Id: 2/4

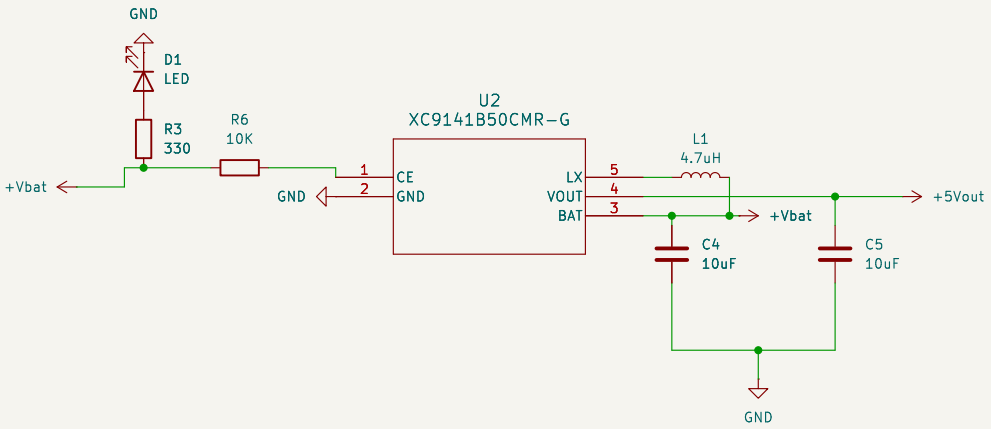

Sheet: /Buck up/
File: buck.kicad_sch

Title:

Size: A4	Date:	**Rev:**
KiCad E.D.A. 9.0.7		Id: 3/4

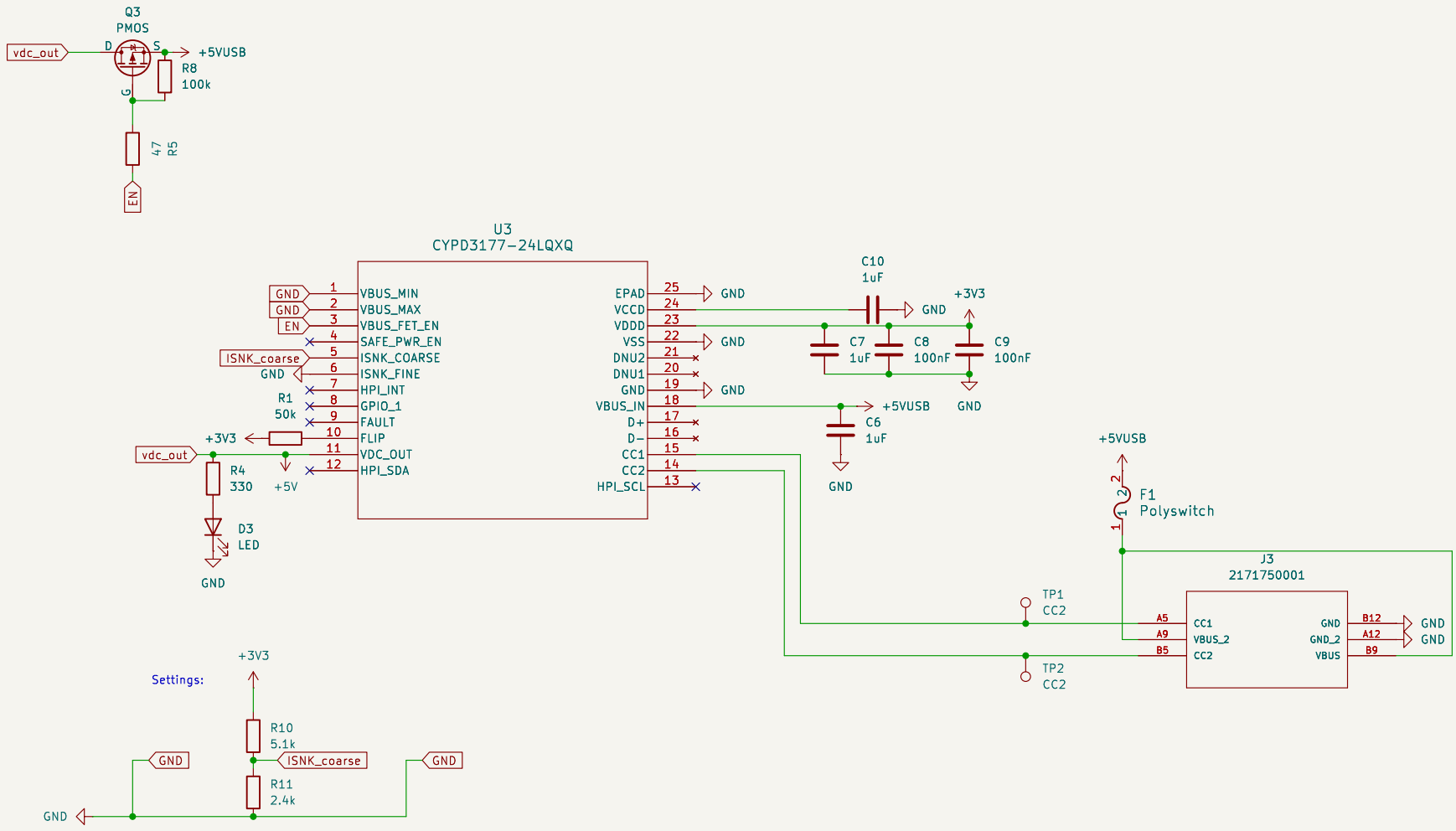

Sheet: /usb-c/
File: usb.kicad_sch

Title:

Size: A4	Date:	Rev:
KiCad E.D.A. 9.0.7		Id: 4/4