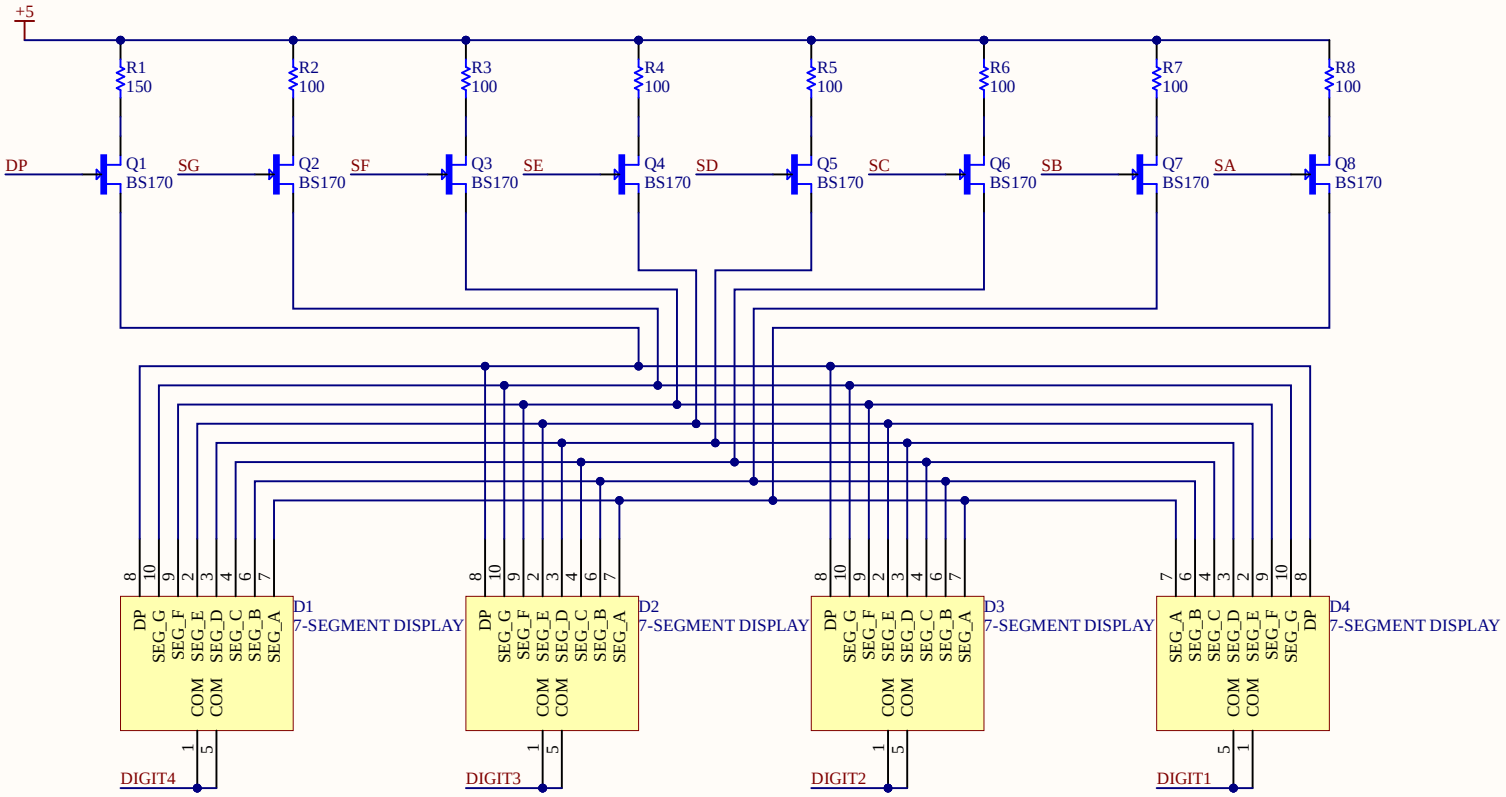

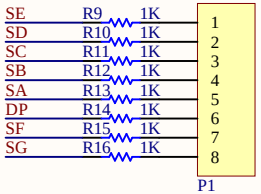

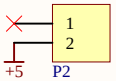

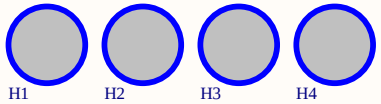

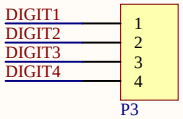

LOGO1

Document Title: **CLOCK'S FACE**			**PIFLab** *Room 304, B1 Block HCMUT 268 Ly Thuong Kiet St. Ward 14, District 10, HCMC*
Project Name: **CLOCK'S FACE**			
Size: A4	Designer: Én	Revision: rev	
Date: 9/24/2022	Time: 9:59:16 PM	Sheet 1 of 2	
File: C:\Data\Projects\DIGITAL-CLOCK-WITH-7-SEGMENT-DISPLAY\PCB Project\DIGITAL-CLOCK-WITH-7-SEGMENT			