Iteration 1 (doesn’t compile)

Top-level

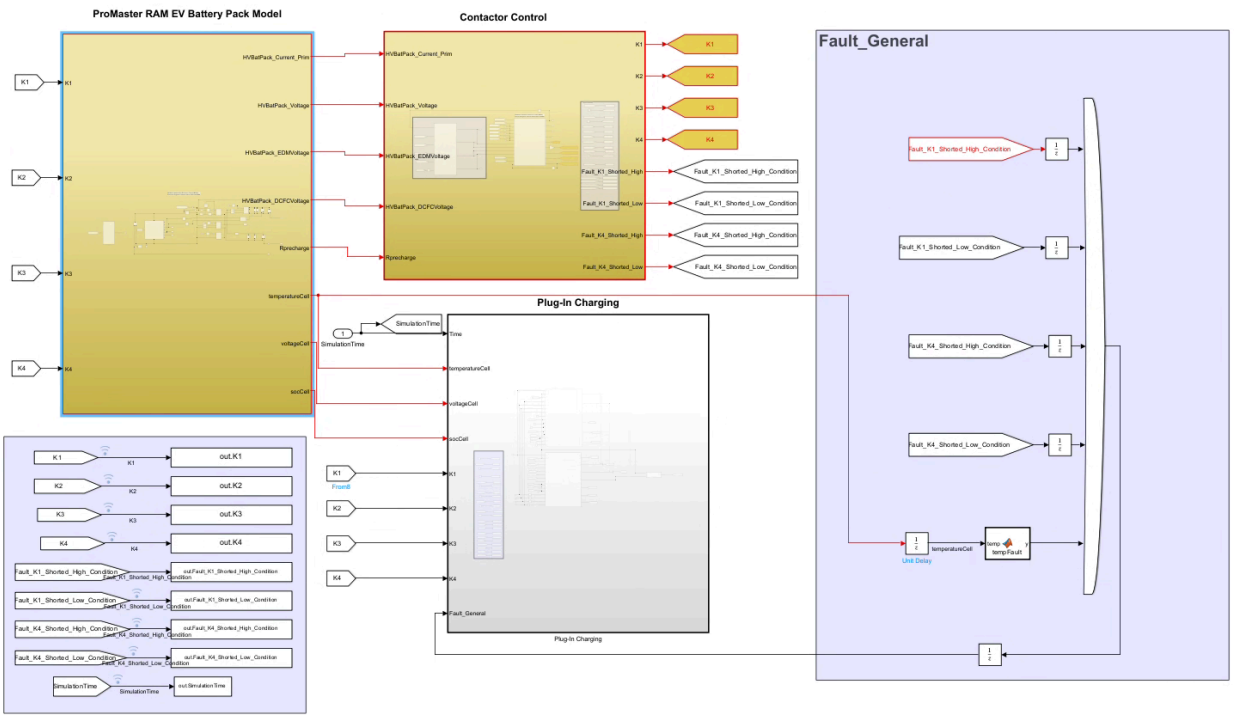

BDU circuit and battery pack

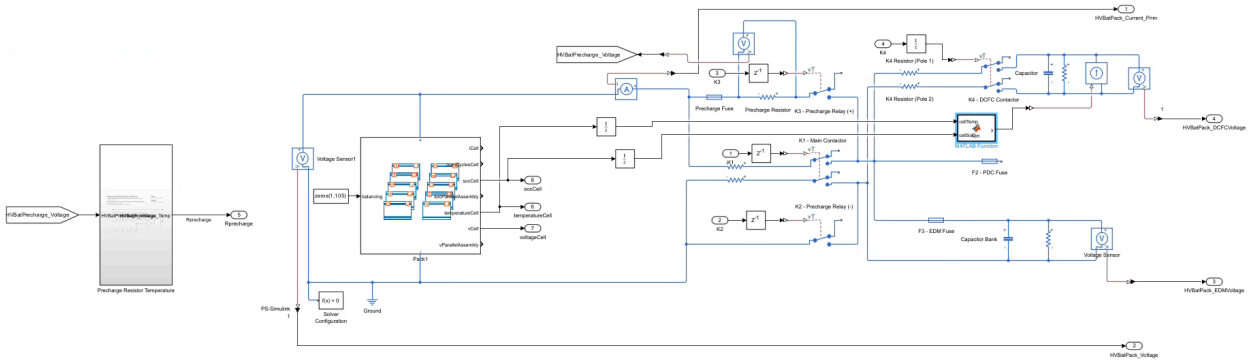

Contactor control

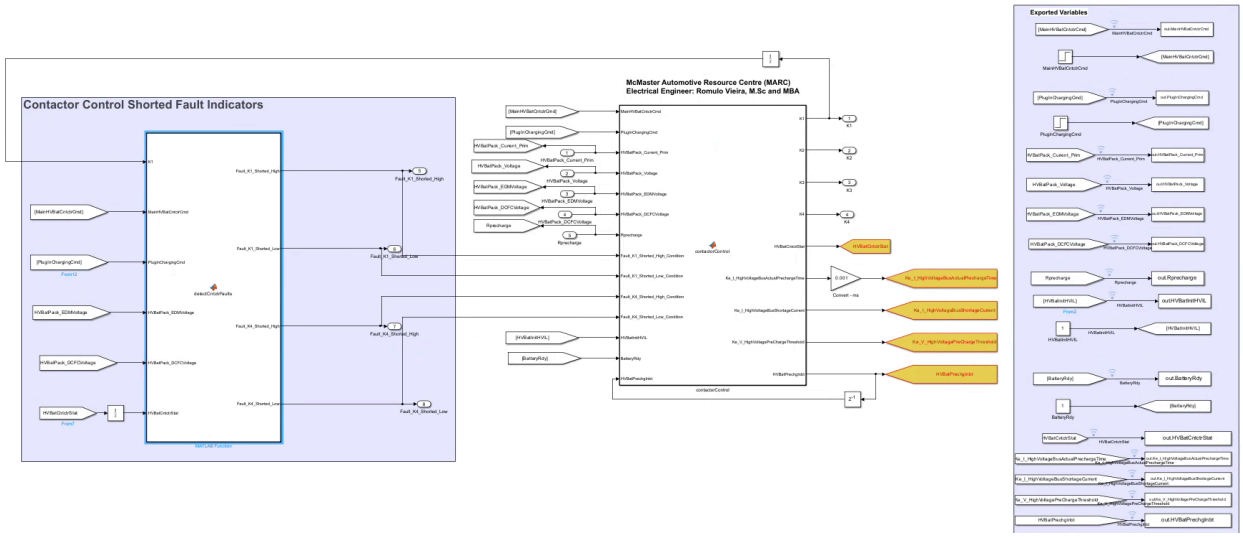

Plugin Charging

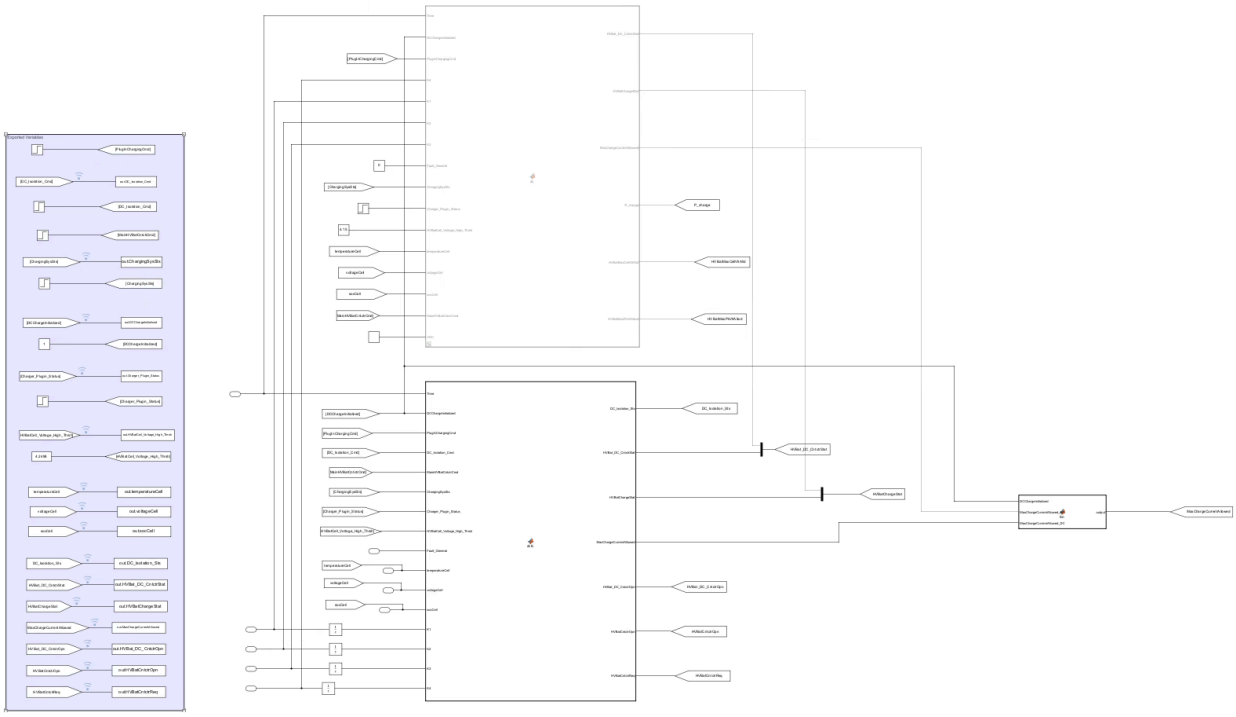

Grouped dcfc inputs

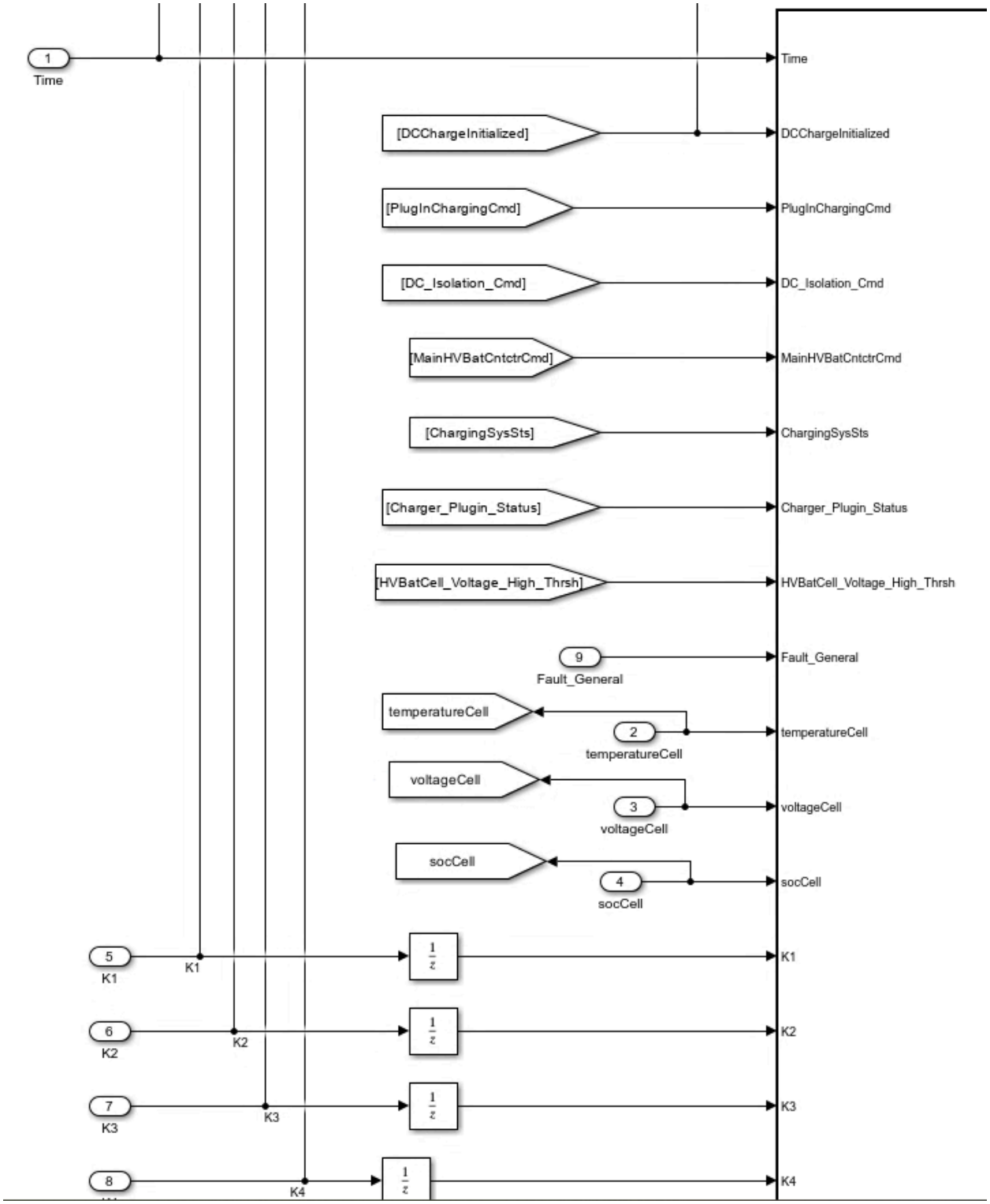

Grouped dcfc outputs

DC_Isolation_Sts
HVBat_DC_CntctrStat
HVBatChargeStat
MaxChargeCurrentAllowed
HVBat_DC_CntctrOpn
HVBatCntctrOpn
HVBatCntctrReq

Grouped contactor control inputs

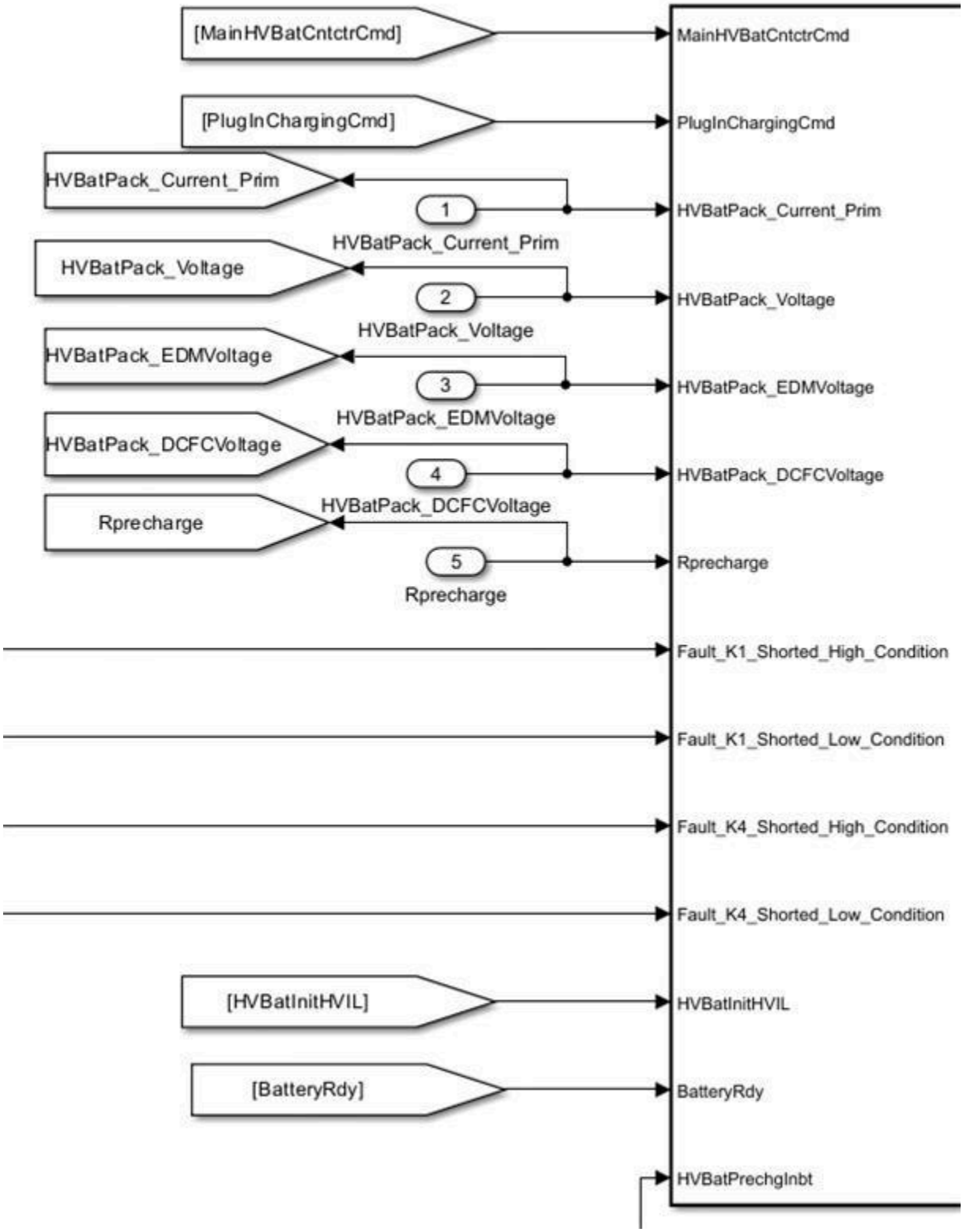

Grouped contactor control outputs

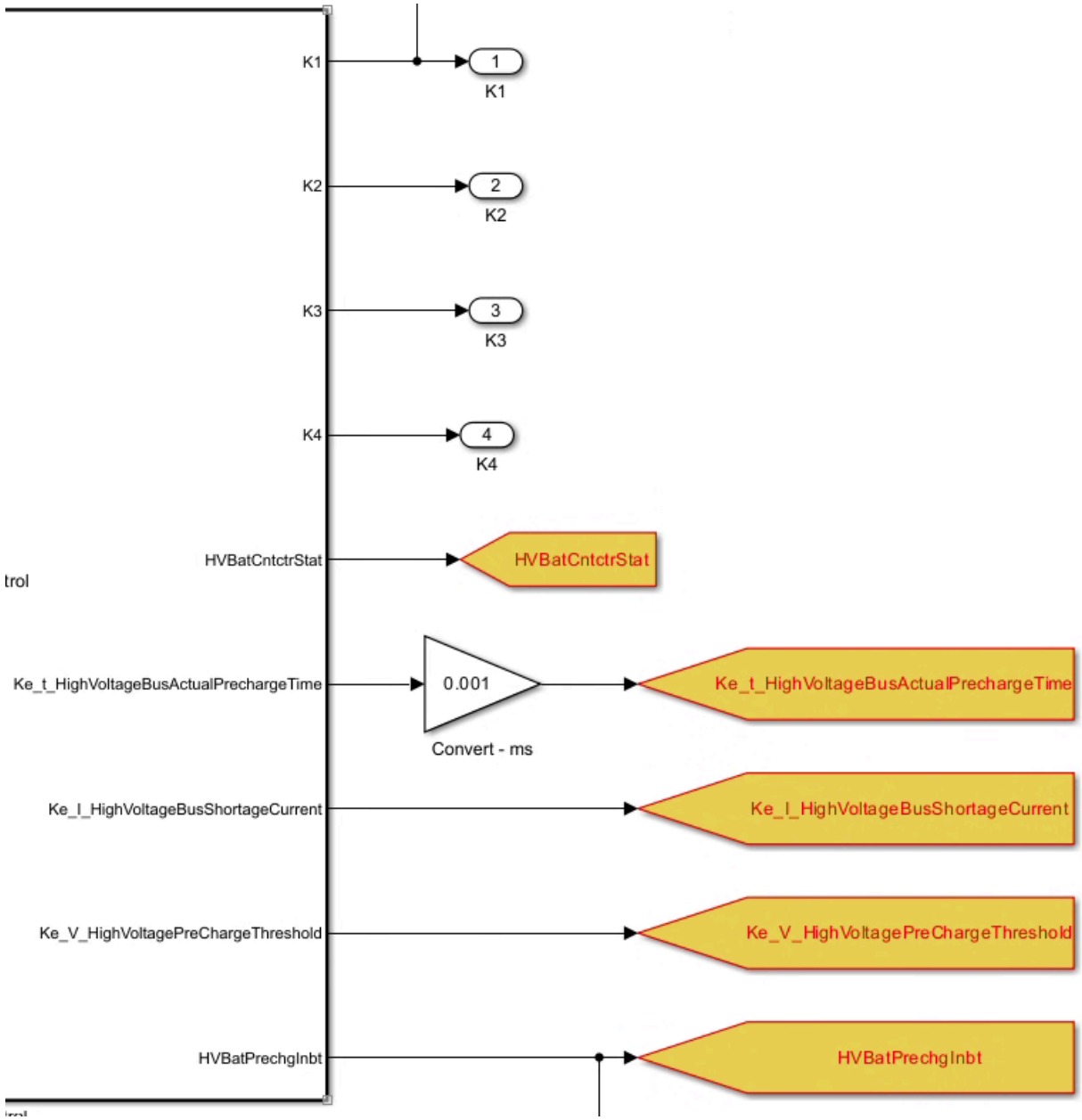

Grouped battery pack and BDU circuit inputs and outputs

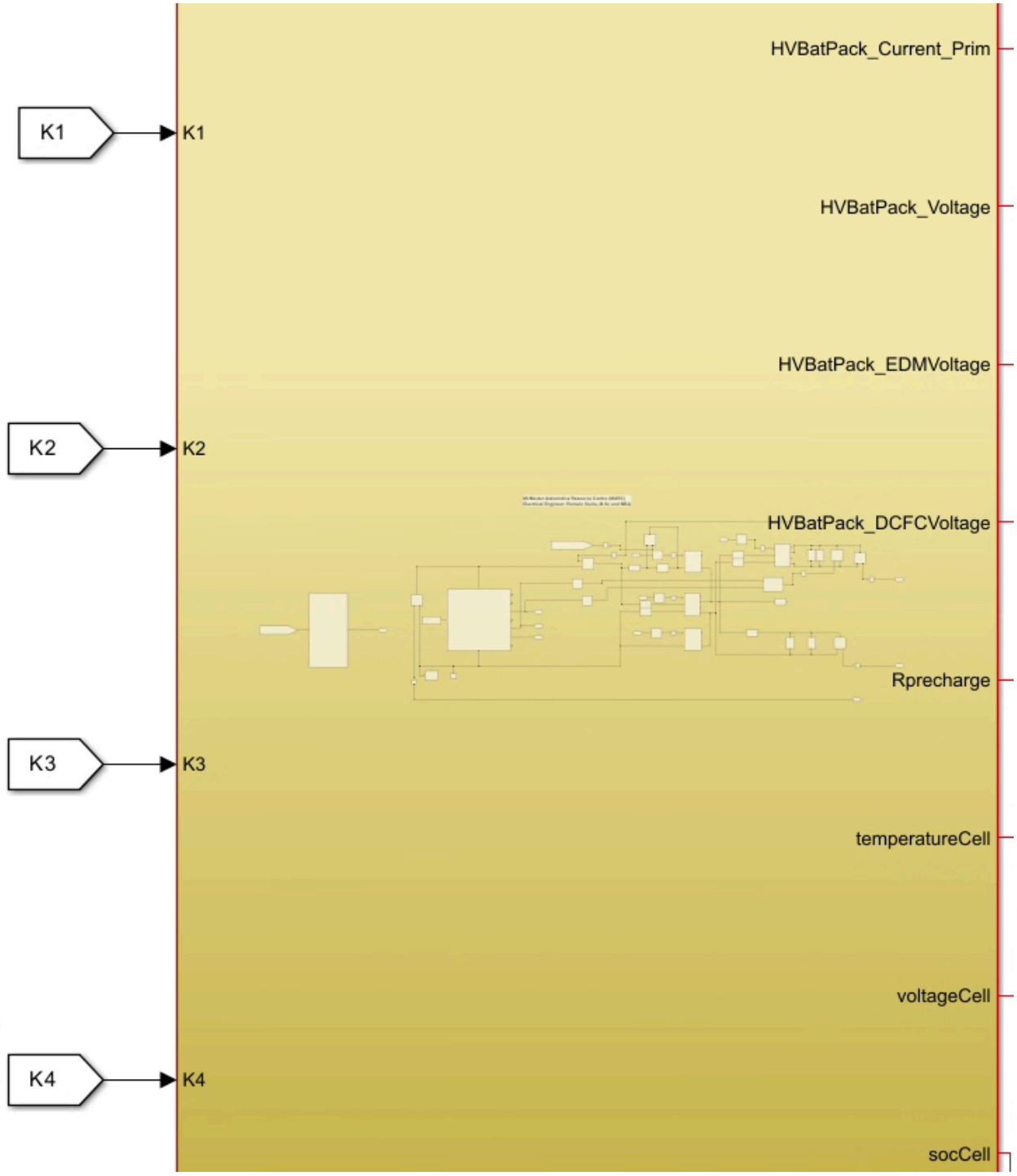
K1
K1
K2
K2
K3
K3
K4
K4
HVBatPack_Current_Prim
HVBatPack_Voltage
HVBatPack_EDMVoltage
HVBatPack_DCFCVoltage
Rprecharge
temperatureCell
voltageCell
socCell

Iteration 2: model compiles, but there is a chattering on pack current after charge is completed. All signals that are logged to be viewed in Data Inspector (1)

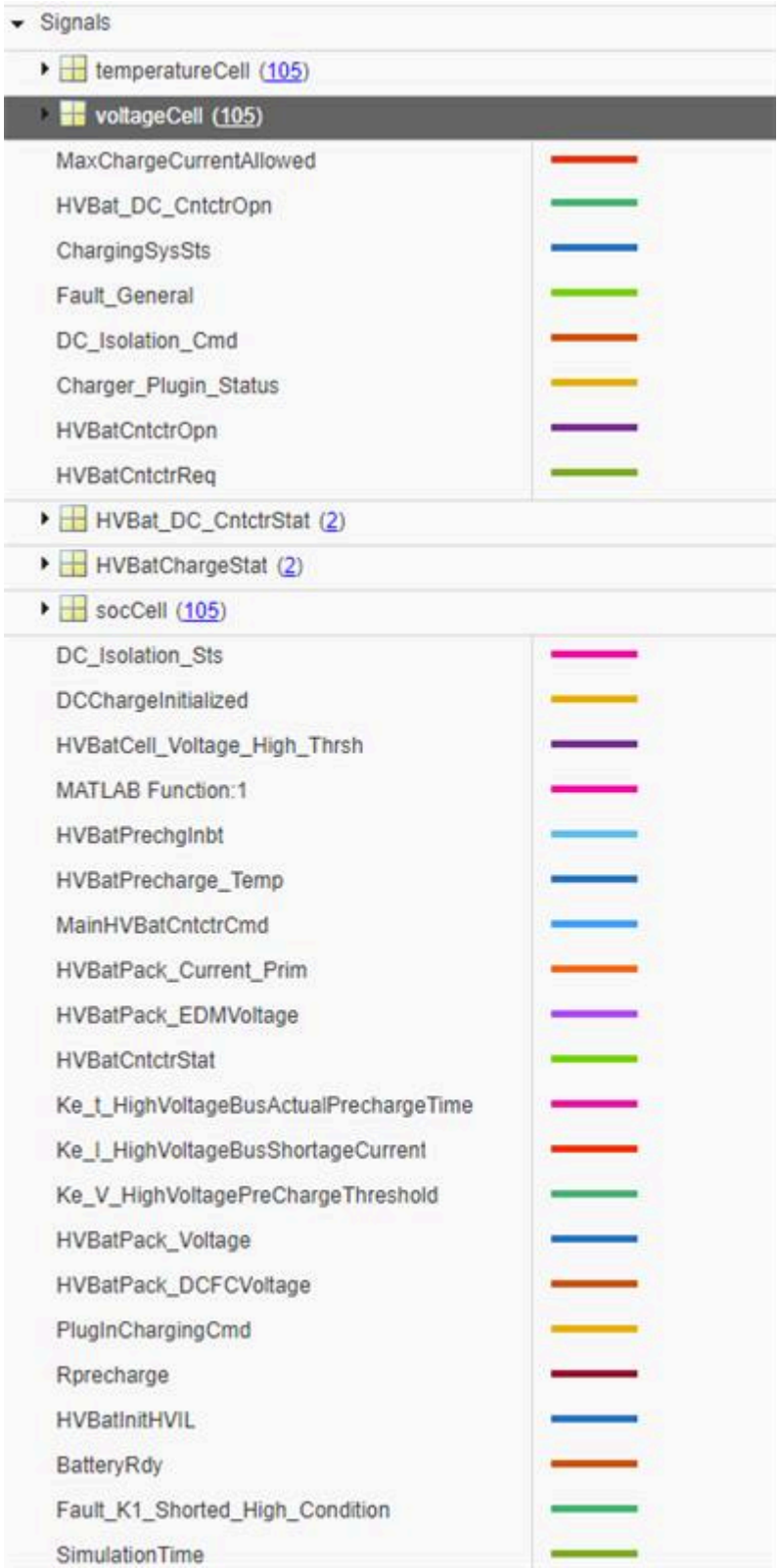

All signals that are logged to be viewed in Data Inspector (2)

Top-level

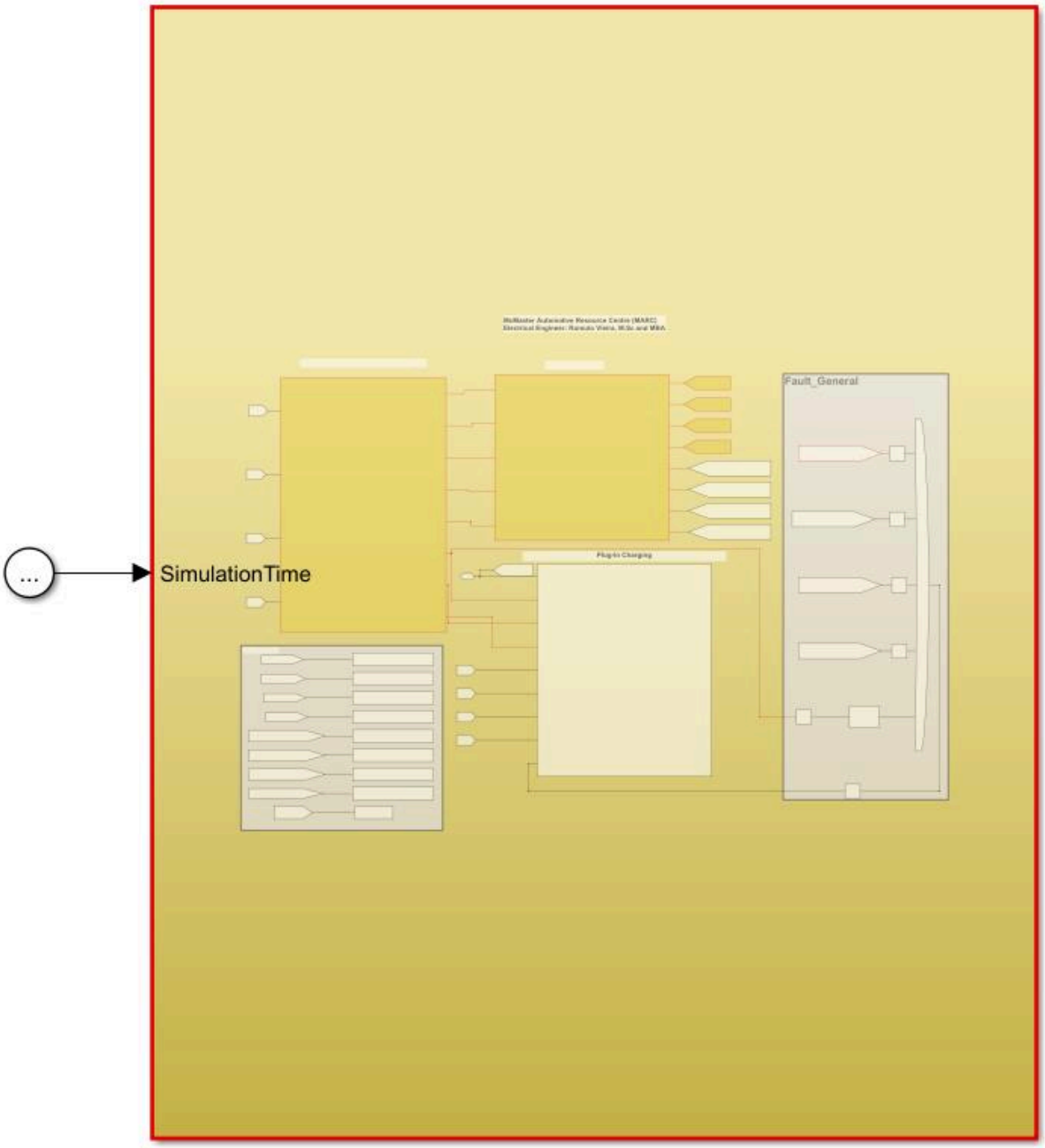

Level right after top-level containging BDU circuit with 105s34p battery pack + contactor control + dcfc + fault detection + some variables to be exported to MATLAB Workspace

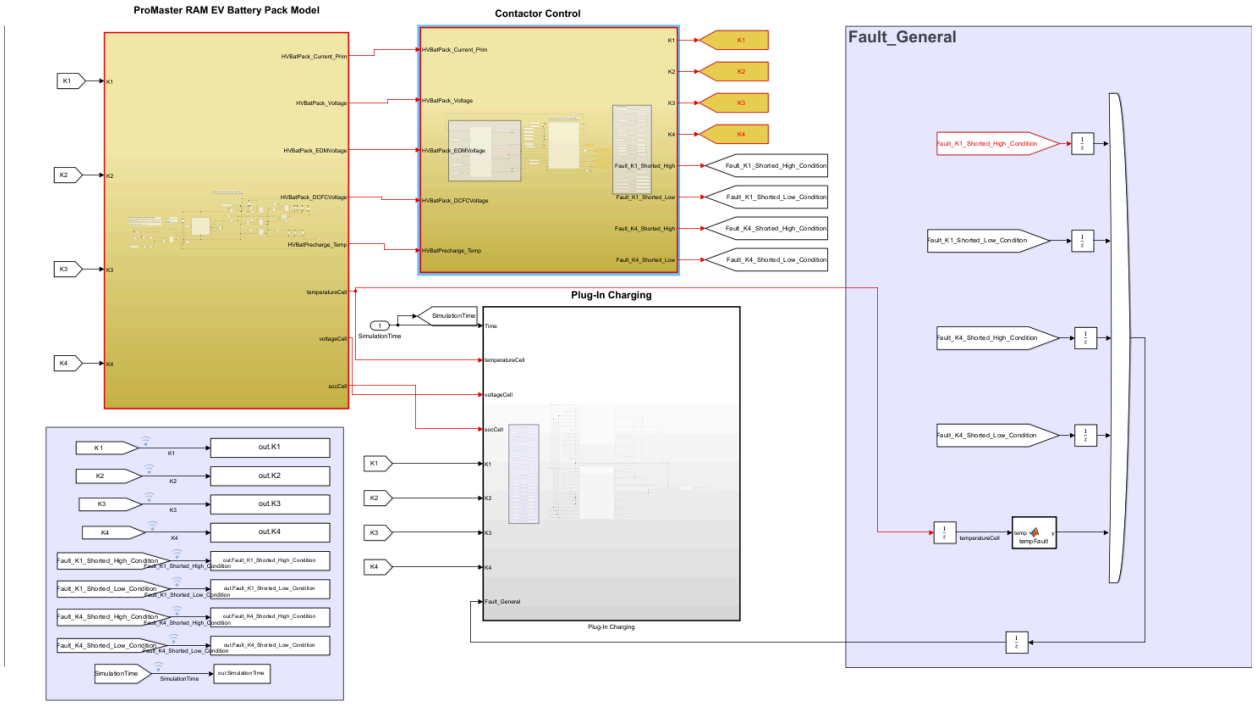

BDU circuit connected to the 105s34p battery pack

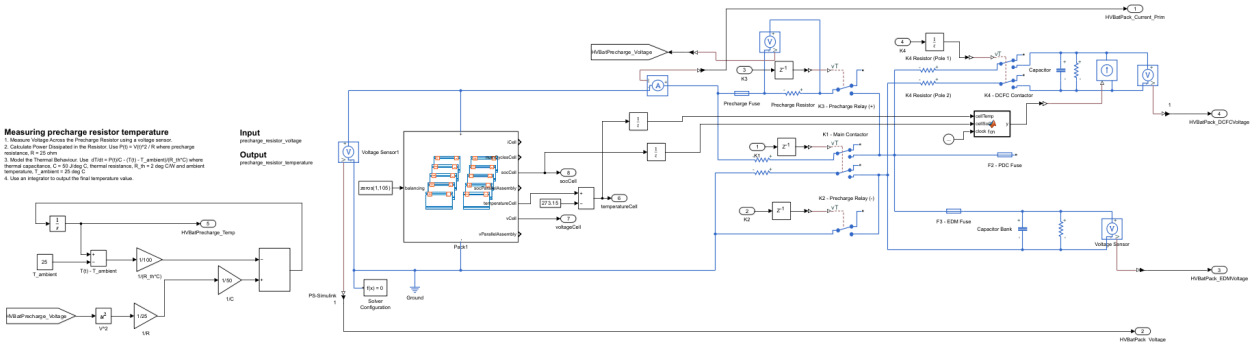

Contactor control function

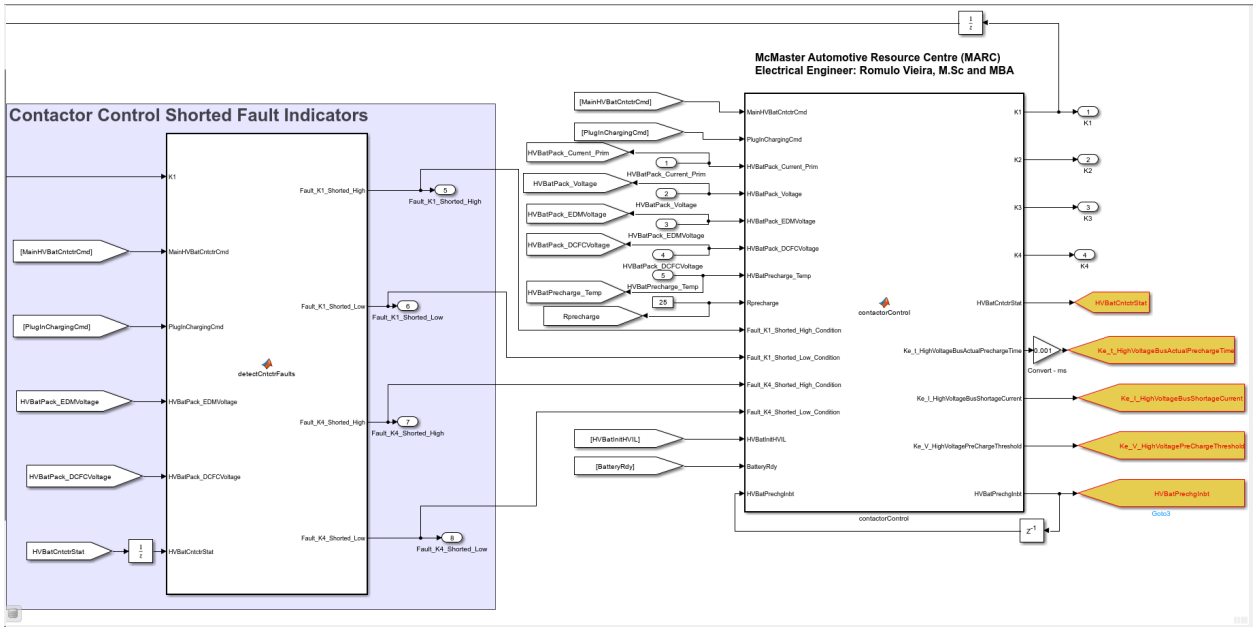

Contactor control exported variables

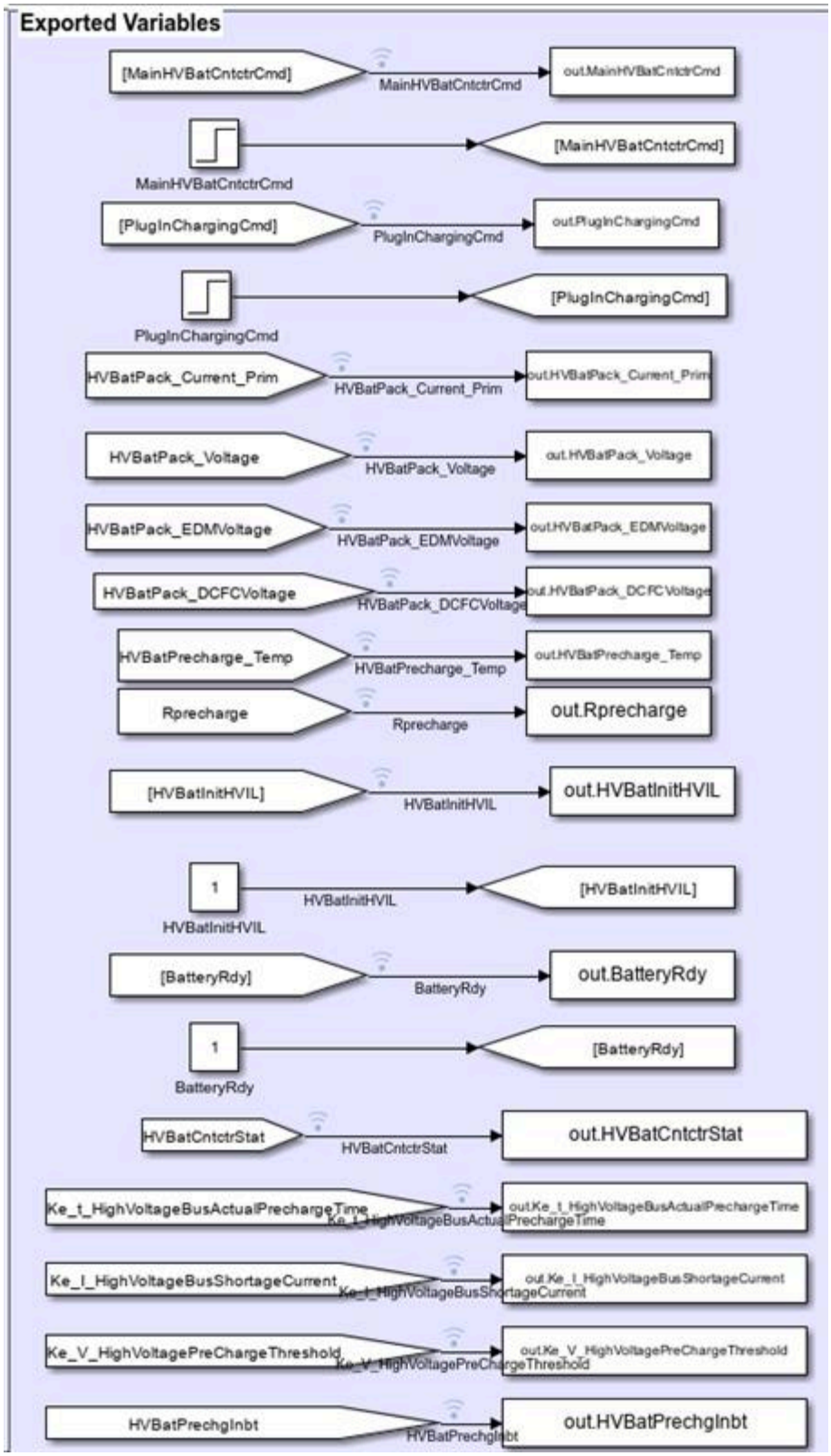
Exported Variables
[MainHVBatCntctrCmd]
MainHVBatCntctrCmd
out.MainHVBatCntctrCmd
MainHVBatCntctrCmd
[MainHVBatCntctrCmd]
[PlugInChargingCmd]
PlugInChargingCmd
out.PlugInChargingCmd
PlugInChargingCmd
[PlugInChargingCmd]
HVBatPack_Current_Prim
HVBatPack_Current_Prim
out.HVBatPack_Current_Prim
HVBatPack_Voltage
HVBatPack_Voltage
out.HVBatPack_Voltage
HVBatPack_EDMVoltage
HVBatPack_EDMVoltage
out.HVBatPack_EDMVoltage
HVBatPack_DCFCVoltage
HVBatPack_DCFCVoltage
out.HVBatPack_DCFCVoltage
HVBatPrecharge_Temp
HVBatPrecharge_Temp
out.HVBatPrecharge_Temp
Rprecharge
Rprecharge
out.Rprecharge
[HVBatInitHVIL]
HVBatInitHVIL
out.HVBatInitHVIL
1
HVBatInitHVIL
[HVBatInitHVIL]
HVBatInitHVIL
[BatteryRdy]
BatteryRdy
out.BatteryRdy
1
BatteryRdy
[BatteryRdy]
HVBatCntctrStat
HVBatCntctrStat
out.HVBatCntctrStat
Ke_t_HighVoltageBusActualPrechargeTime
Ke_t_HighVoltageBusActualPrechargeTime
out.Ke_t_HighVoltageBusActualPrechargeTime
Ke_I_HighVoltageBusShortageCurrent
Ke_I_HighVoltageBusShortageCurrent
out.Ke_I_HighVoltageBusShortageCurrent
Ke_V_HighVoltagePreChargeThreshold
Ke_V_HighVoltagePreChargeThreshold
out.Ke_V_HighVoltagePreChargeThreshold
HVBatPrechgInbt
HVBatPrechgInbt
out.HVBatPrechgInbt

Full contactor control subsystem view

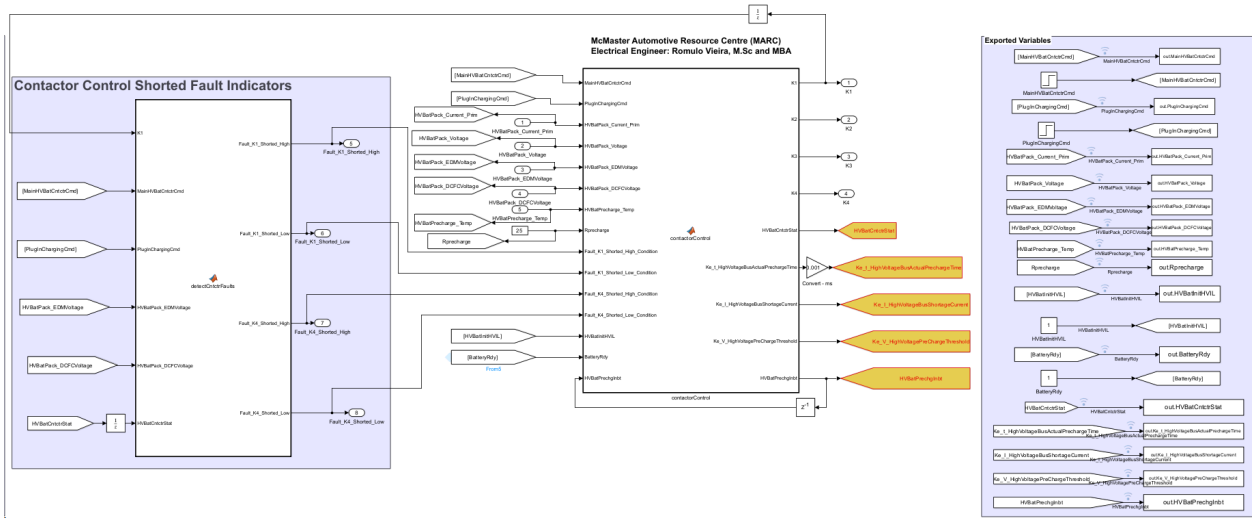

dcfc function

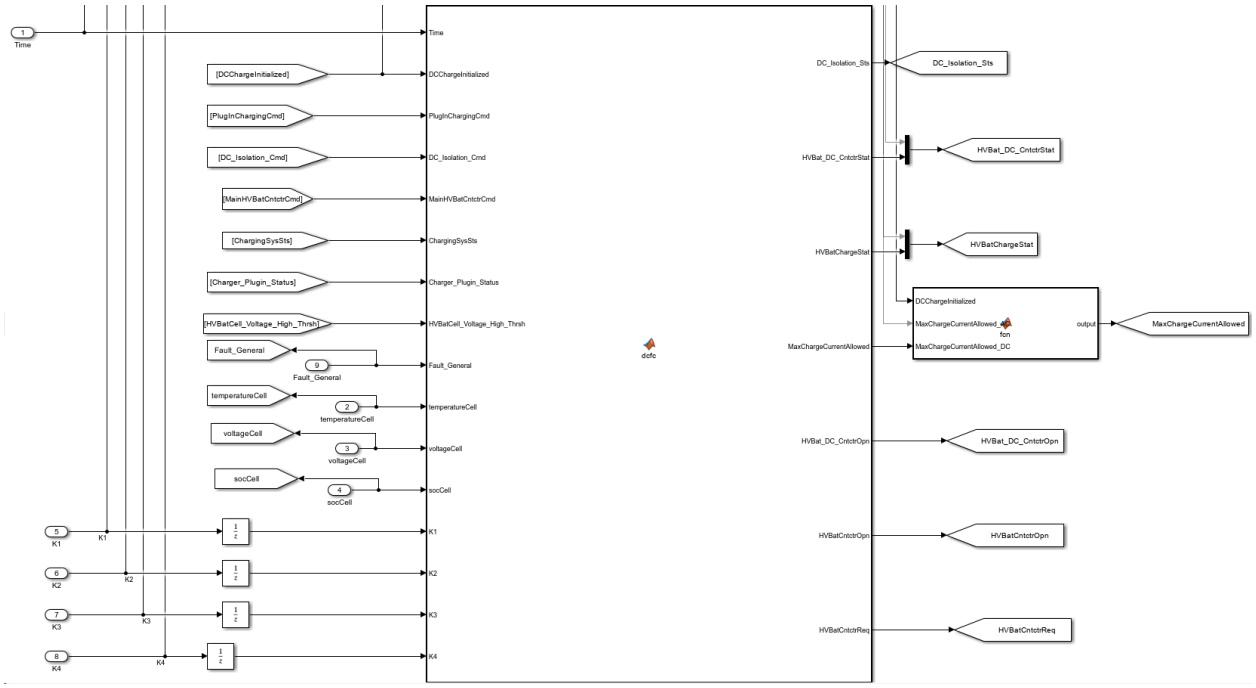

dcfc exported variables

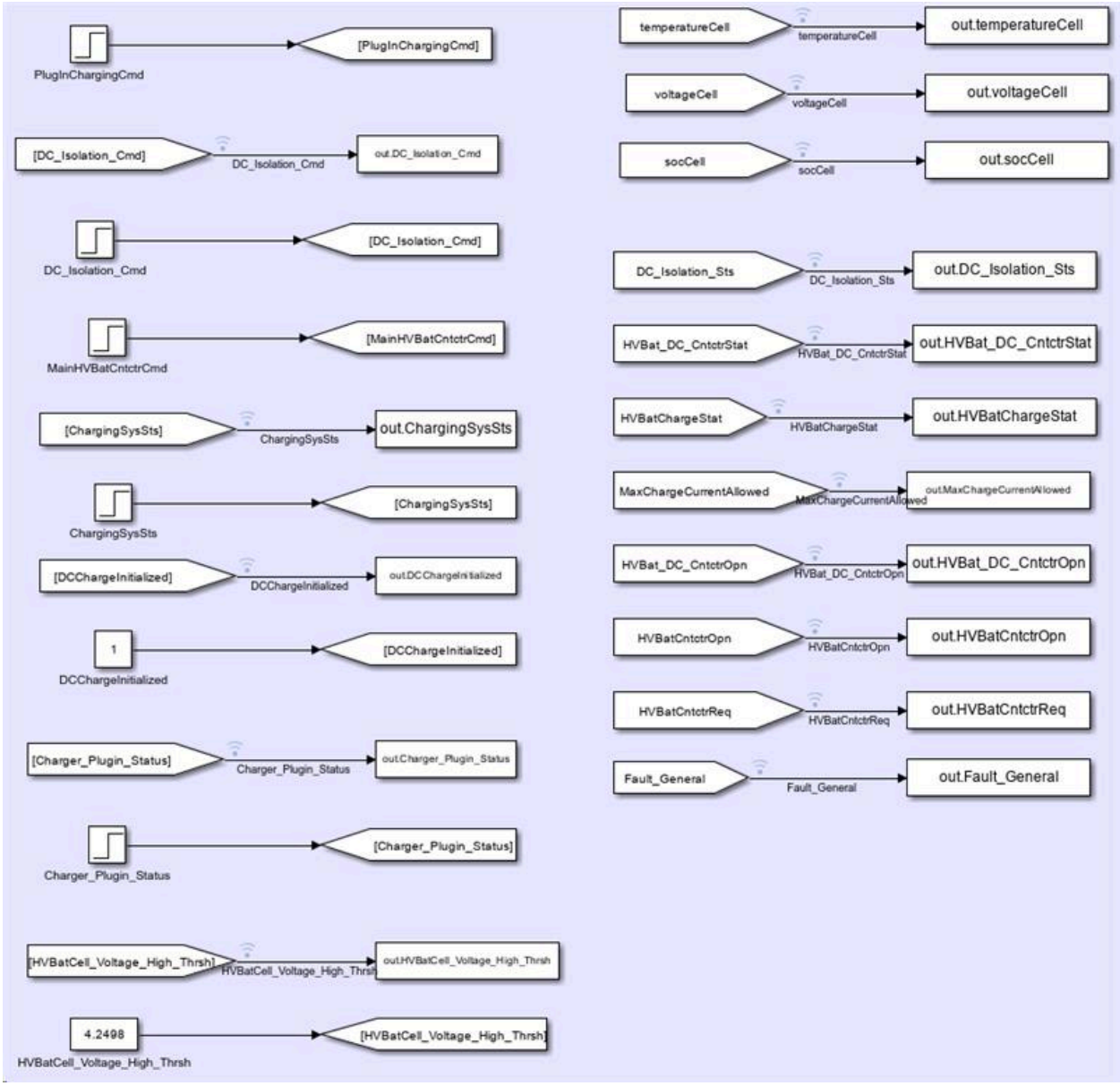

fault detection mechanism

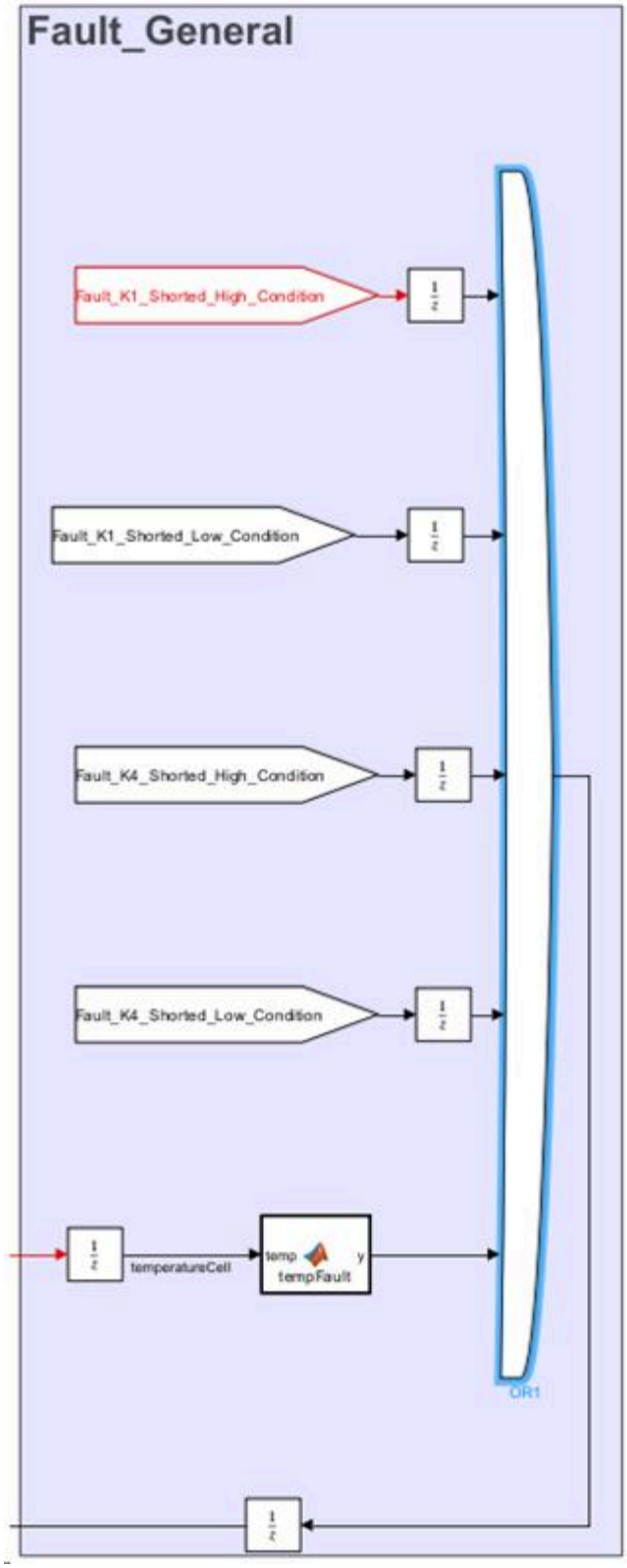

Some additional exported variables

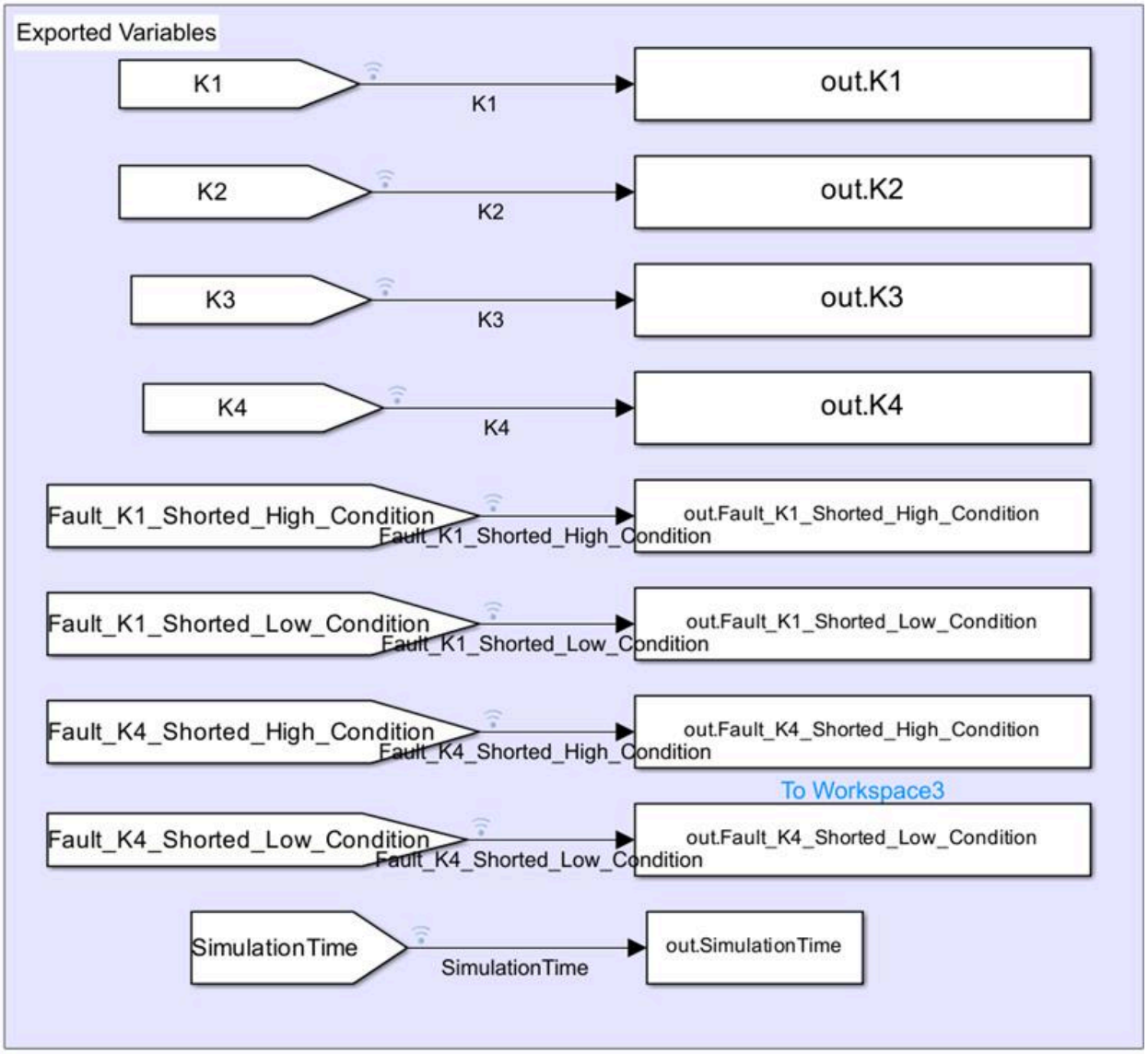
Exported Variables
K1
K1
out.K1
K2
K2
out.K2
K3
K3
out.K3
K4
K4
out.K4
Fault_K1_Shorted_High_Condition
Fault_K1_Shorted_High_Condition
out.Fault_K1_Shorted_High_Condition
Fault_K1_Shorted_Low_Condition
Fault_K1_Shorted_Low_Condition
out.Fault_K1_Shorted_Low_Condition
Fault_K4_Shorted_High_Condition
Fault_K4_Shorted_High_Condition
out.Fault_K4_Shorted_High_Condition
To Workspace3
Fault_K4_Shorted_Low_Condition
Fault_K4_Shorted_Low_Condition
out.Fault_K4_Shorted_Low_Condition
SimulationTime
SimulationTime
out.SimulationTime