Top-level

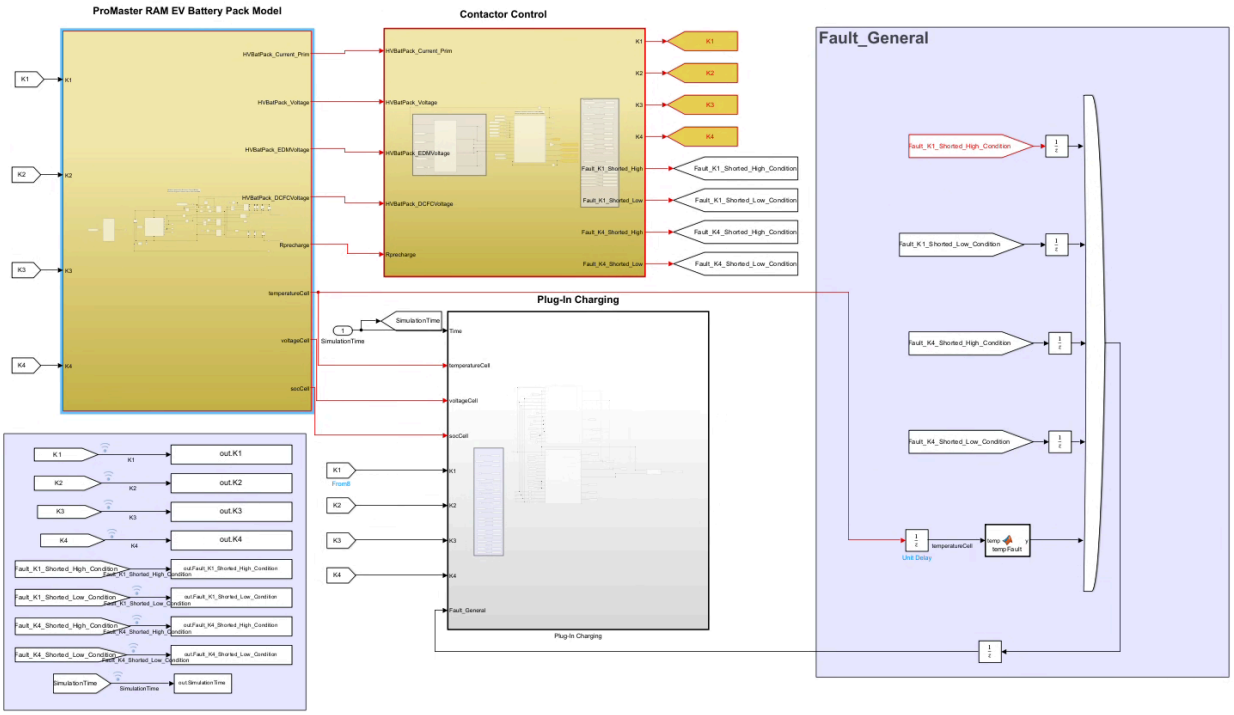

BDU circuit and battery pack

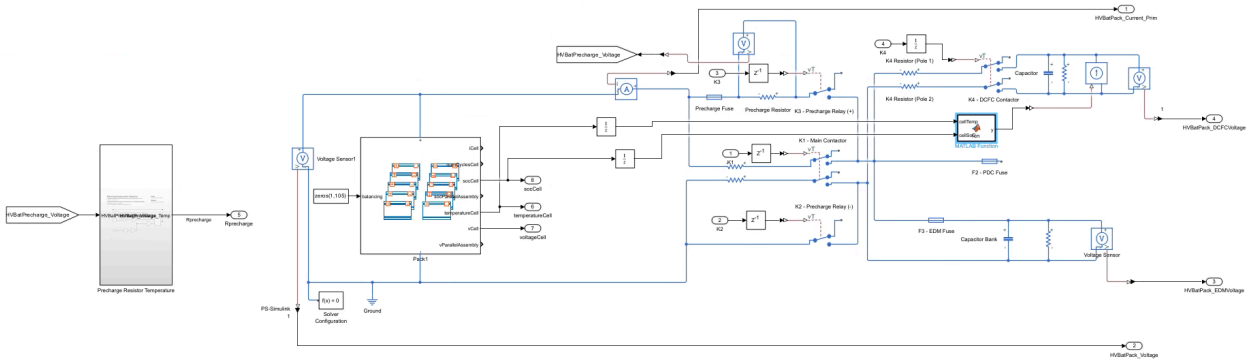

Contactor control

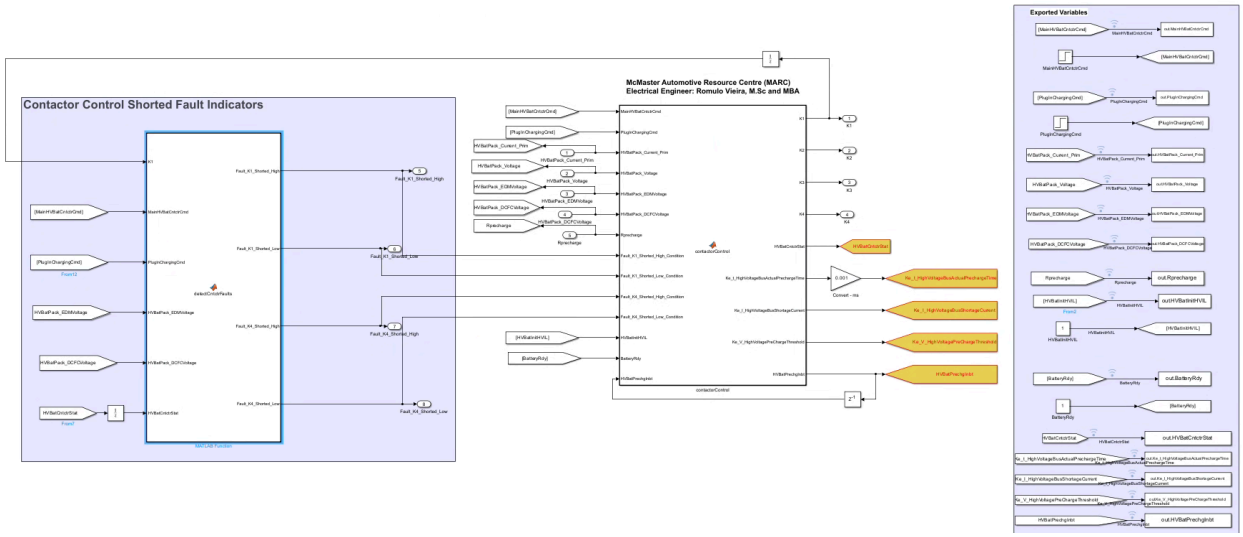

Plugin Charging

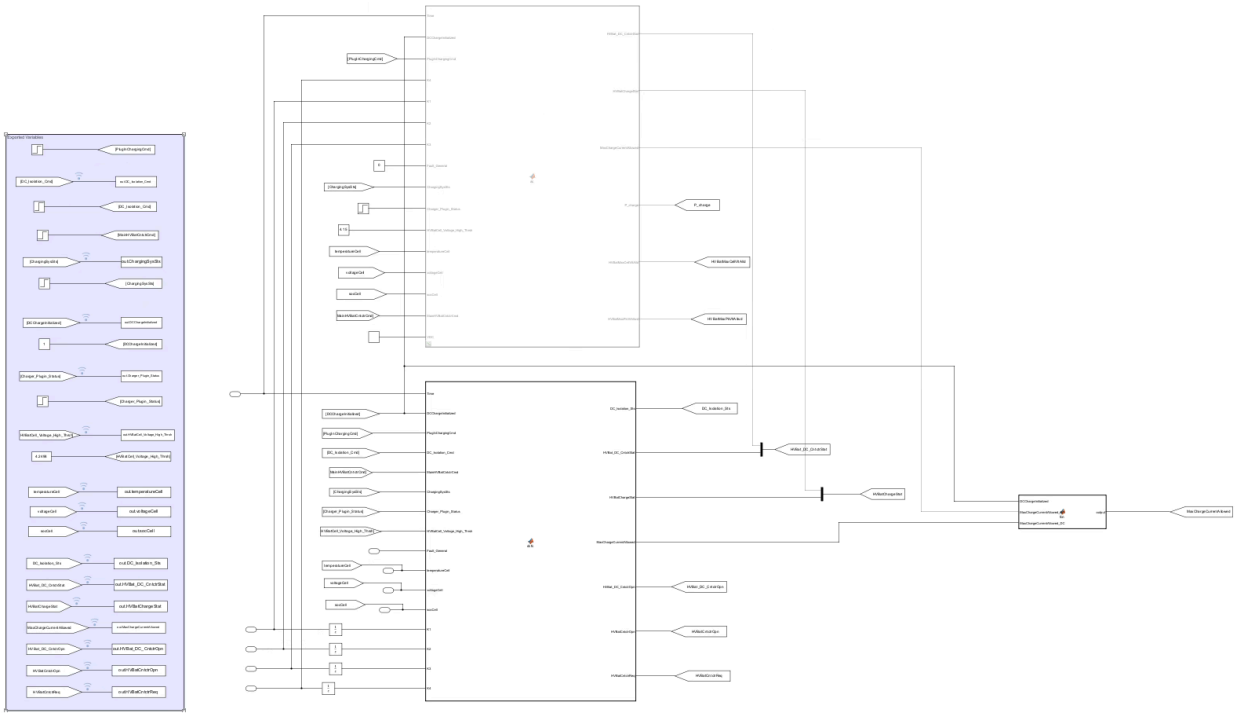

Grouped dcfc inputs

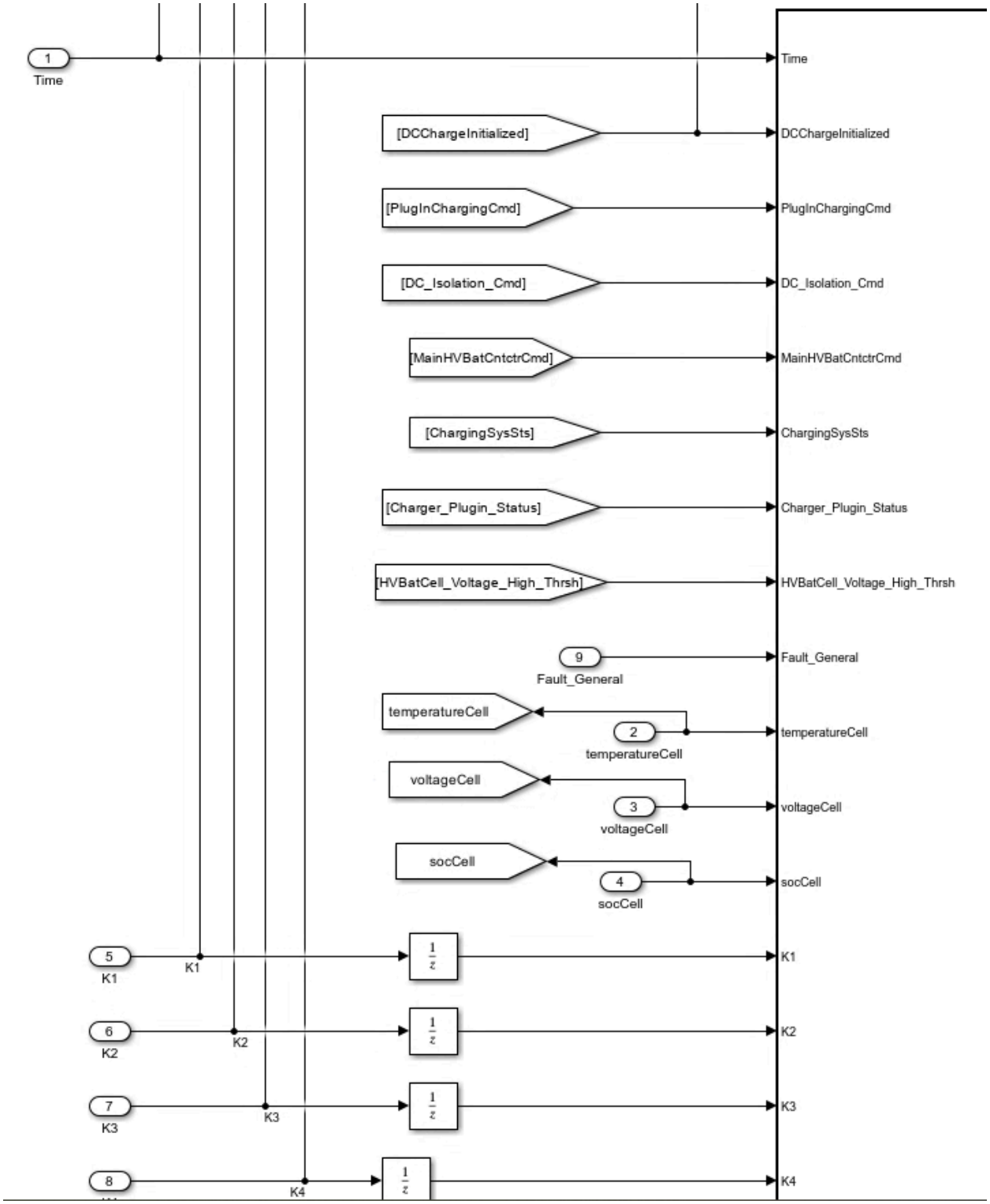

Grouped dcfc outputs

DC_Isolation_Sts
HVBat_DC_CntctrStat
HVBatChargeStat
MaxChargeCurrentAllowed
HVBat_DC_CntctrOpn
HVBatCntctrOpn
HVBatCntctrReq

Grouped contactor control inputs

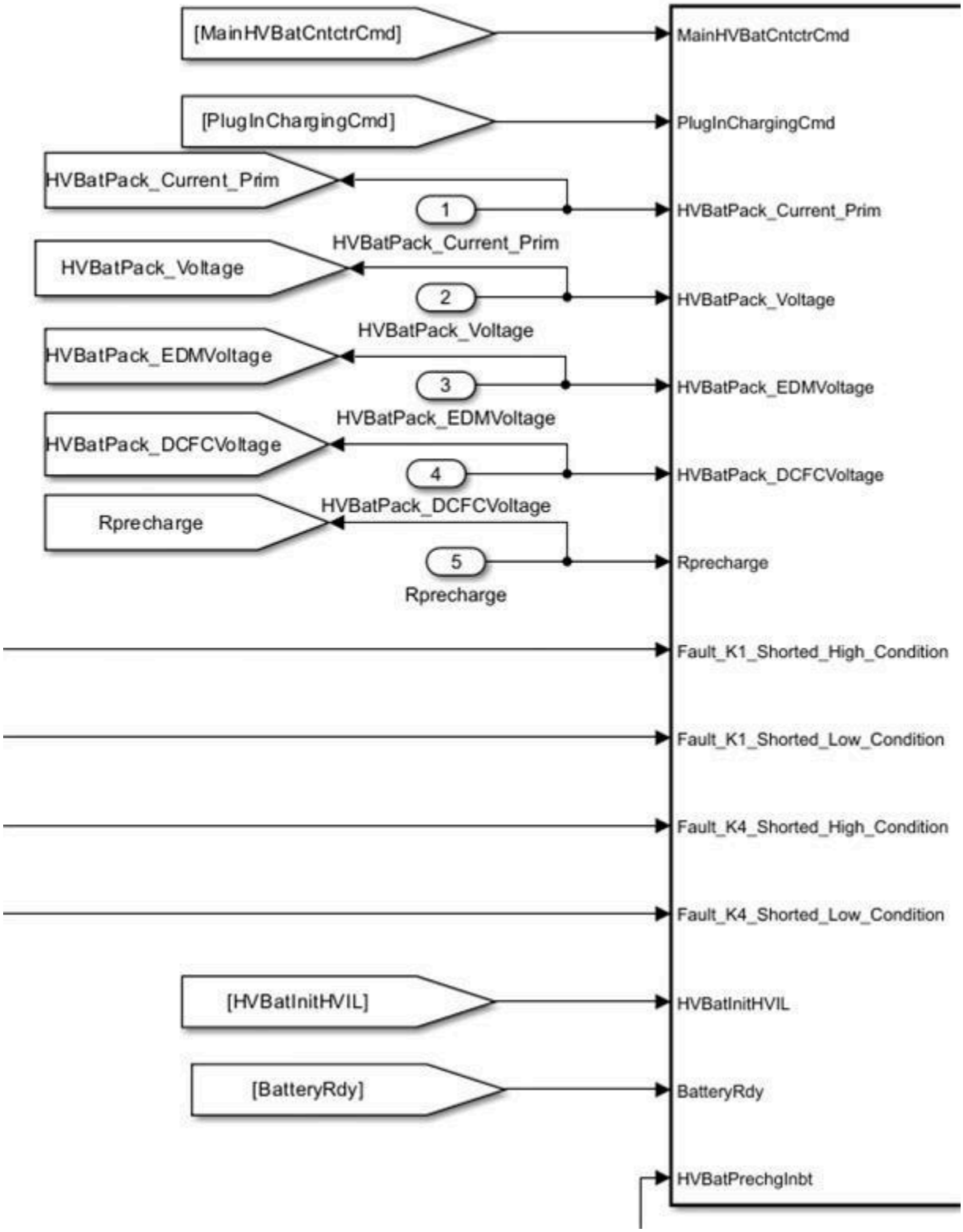

Grouped contactor control outputs

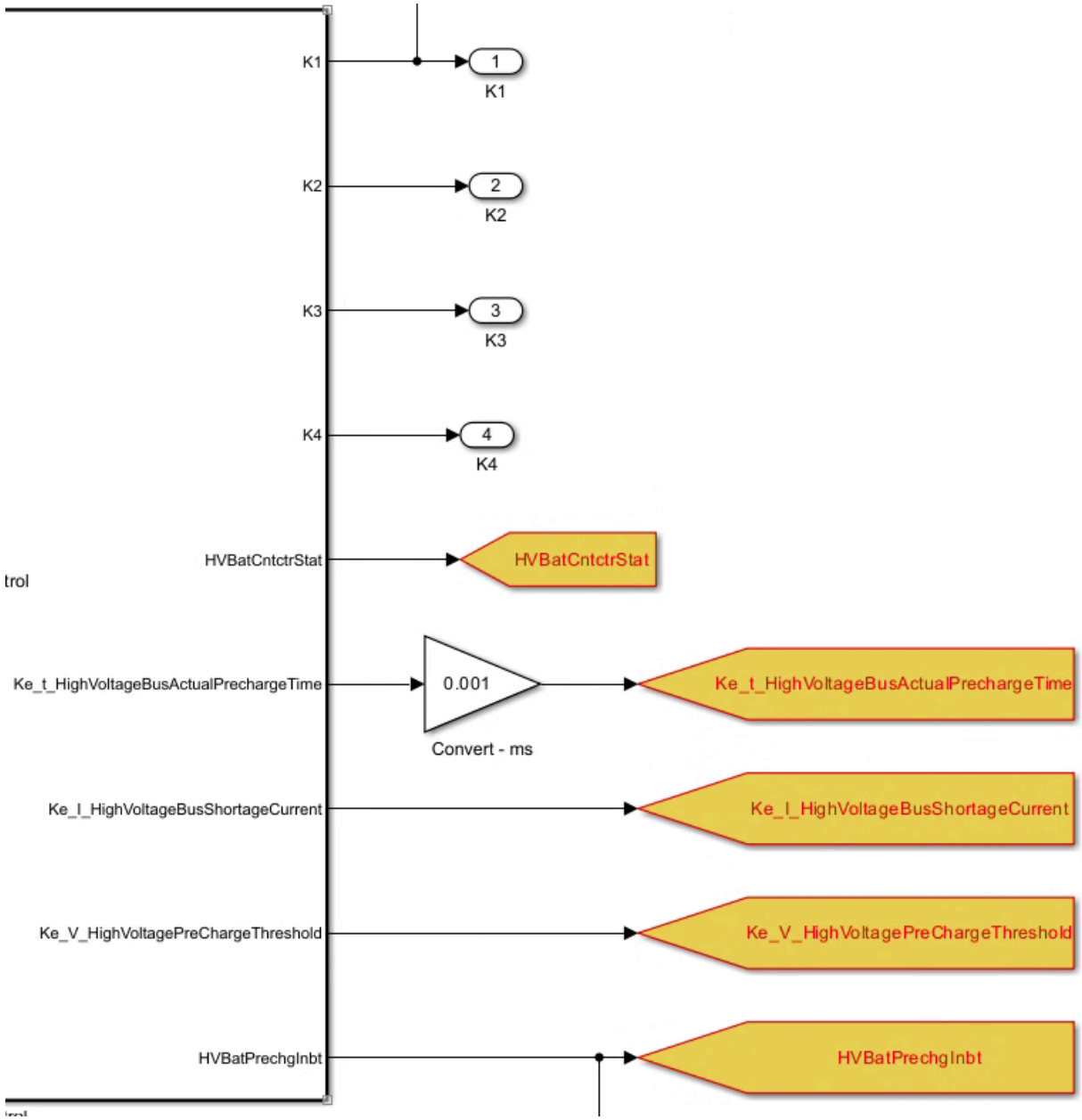

Grouped battery pack and BDU circuit inputs and outputs

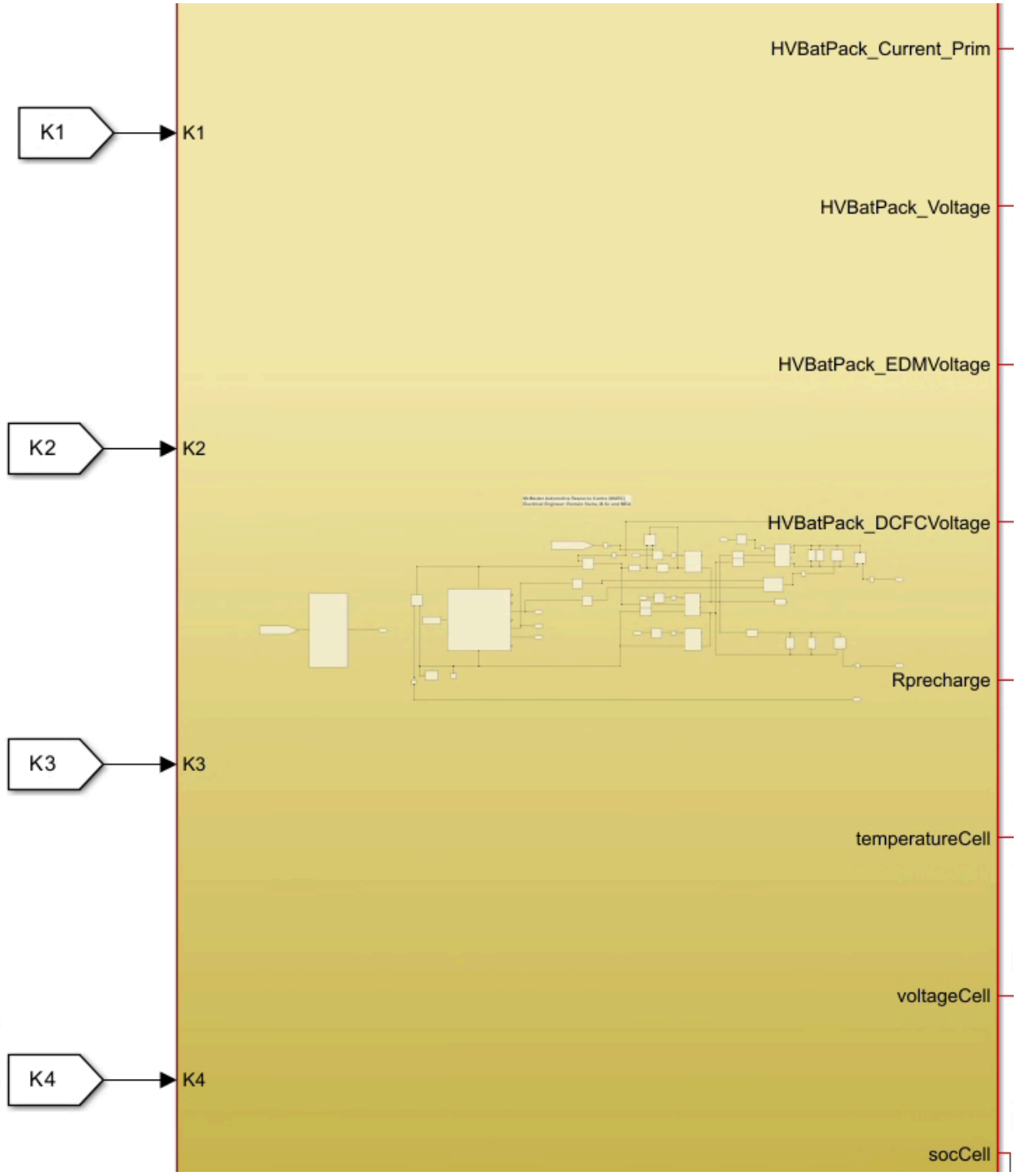
K1
K1
K2
K2
K3
K3
K4
K4
HVBatPack_Current_Prim
HVBatPack_Voltage
HVBatPack_EDMVoltage
HVBatPack_DCFCVoltage
Rprecharge
temperatureCell
voltageCell
socCell