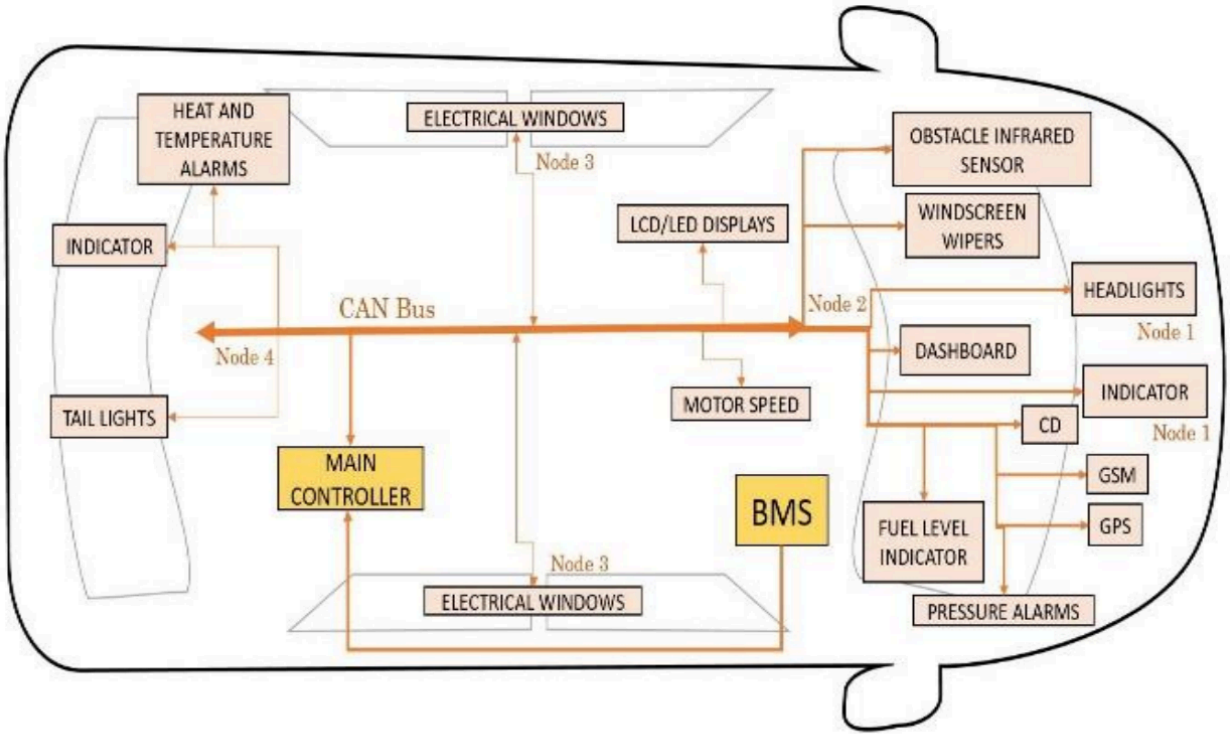

Fig.5 CAN Bus Control System in Electric Vehicle

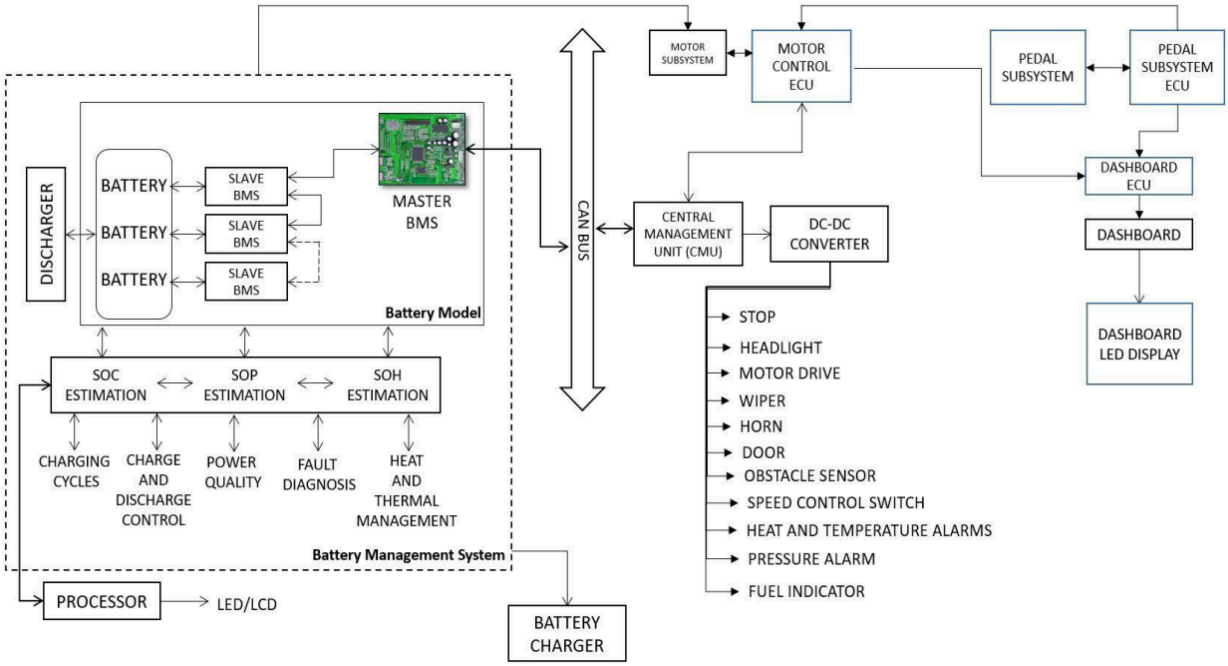

Fig.6 BMS integrated CAN bus control environment