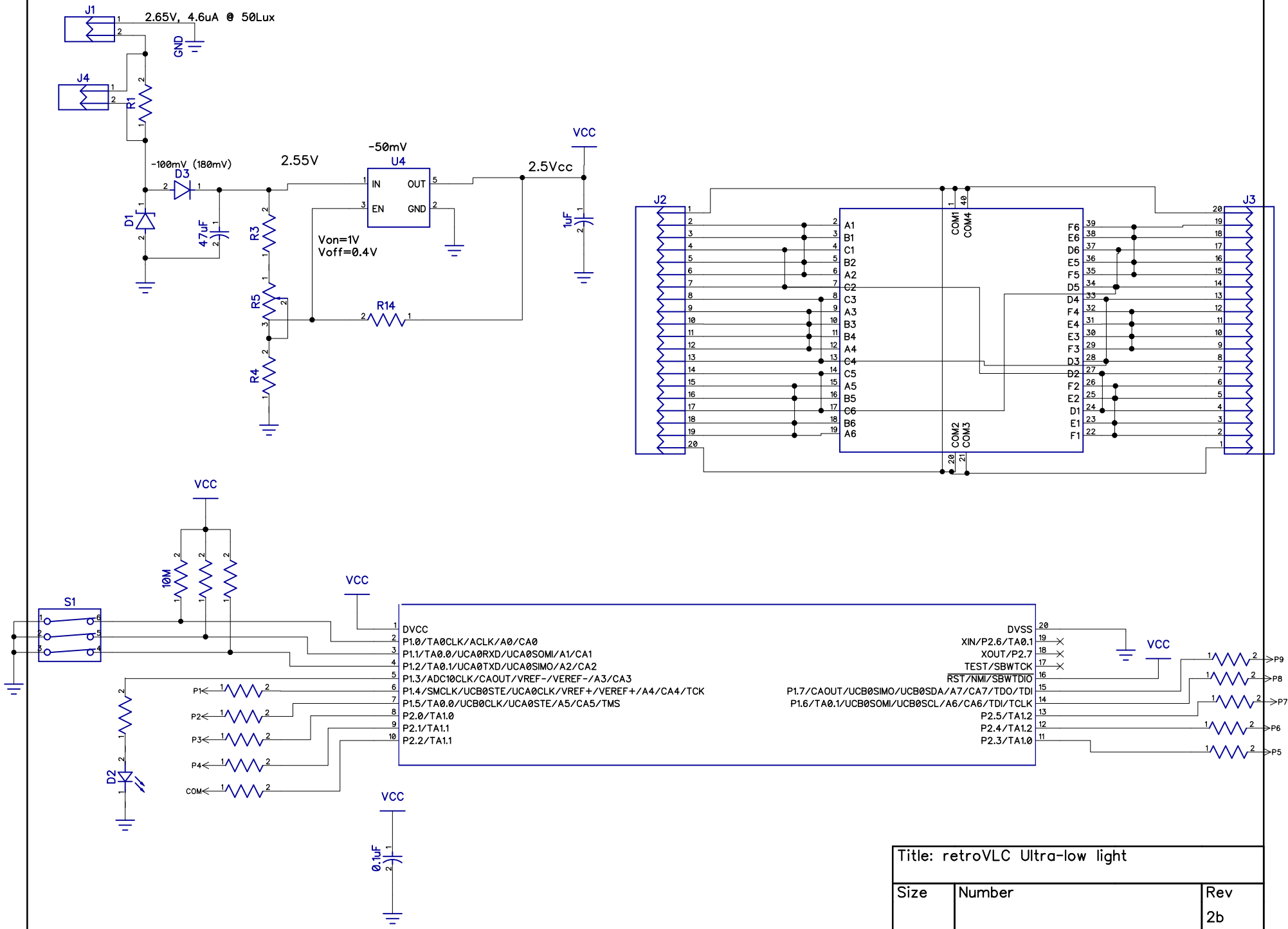

Title: retroVLC Ultra-low light		
Size	Number	Rev 2b
Date: 7/13/2022		Drawn by AJS
Filename: shutter_rev2.dch		Sheet 1/1