What Painting Are You?

Dual-Encoder Face-to-Art Matching via CLIP and FaRL Embedding Fusion

Makar Ulesov
Mohamed bin Zayed University of Artificial Intelligence
makar.ulesov@mbzuai.ac.ae

March 2026

Abstract. We present a face-to-painting matching system that identifies a user's "artistic twin" from a curated gallery of over 3,200 paintings spanning multiple centuries, cultures, and art movements. The system employs two complementary vision encoders: a vanilla CLIP ViT-B/32 model that captures holistic visual similarity (color palette, composition, lighting, artistic mood) and a FaRL ViT-B/16 model fine-tuned on 20 million face–text pairs that captures facial structural resemblance. We introduce a z-score normalized blending mechanism that fuses both signals into a single ranking, with a user-adjustable parameter α controlling the emphasis between artistic "vibe" and facial geometry. The system is deployed as both a Gradio web application on HuggingFace Spaces and a Telegram bot, achieving sub-second inference on consumer hardware.

Introduction

Matching human faces to artistic portraits is an inherently multi-modal task that requires understanding two fundamentally different kinds of visual similarity. On one hand, a good match should exhibit *facial resemblance*: the person in the painting should structurally look like the user — similar bone structure, eye shape, skin tone, or expression. On the other hand, a compelling match should also feel *aesthetically resonant*: the painting's color palette, lighting, composition, and artistic mood should "fit" the user's overall visual presence.

No single model excels at both tasks simultaneously. General-purpose vision–language models like CLIP [1] produce rich embeddings that capture holistic visual semantics but lack sensitivity to fine-grained facial geometry. Dedicated face recognition models like ArcFace [3] excel at facial identification but operate in a completely different embedding space and were trained exclusively on photographs, making them unreliable on artistic media. FaRL [2], a face-aware variant of CLIP, offers a middle ground: it retains CLIP's broad visual understanding while being further pre-trained on 20 million face–text pairs, making it significantly more attuned to facial structure.

Our system fuses the outputs of vanilla CLIP and FaRL through a principled score-level fusion mechanism, producing matches that are both facially plausible and artistically compelling. The user can dynamically adjust the balance between these two signals via a single parameter $\alpha \in [0, 1]$.

Background

Contrastive Language–Image Pre-training (CLIP)

CLIP [1] jointly trains an image encoder f_{img} and a text encoder f_{txt} on approximately 400 million image–text pairs collected from the internet. Both encoders map their respective inputs into a shared d-dimensional embedding space ($d = 512$ for ViT-B/32). Training uses a symmetric contrastive loss (InfoNCE): given a batch of N image–text pairs $\{(\mathbf{x}_i, \mathbf{t}_i)\}_{i=1}^{N}$, the loss maximizes the cosine similarity of the N matched pairs while minimizing it for the $N^2 - N$ unmatched pairs:

$$\mathcal{L} = -\frac{1}{2N}\sum_{i=1}^{N}\left[\log\frac{\exp\big(\operatorname{sim}(\mathbf{z}_i^{\text{img}}, \mathbf{z}_i^{\text{txt}})/\tau\big)}{\sum_{j=1}^{N}\exp\big(\operatorname{sim}(\mathbf{z}_i^{\text{img}}, \mathbf{z}_j^{\text{txt}})/\tau\big)} + \log\frac{\exp\big(\operatorname{sim}(\mathbf{z}_i^{\text{txt}}, \mathbf{z}_i^{\text{img}})/\tau\big)}{\sum_{j=1}^{N}\exp\big(\operatorname{sim}(\mathbf{z}_j^{\text{txt}}, \mathbf{z}_i^{\text{img}})/\tau\big)}\right] \tag{1}$$

where $\mathbf{z}_i^{\text{img}} = f_{\text{img}}(\mathbf{x}_i)$, $\mathbf{z}_i^{\text{txt}} = f_{\text{txt}}(\mathbf{t}_i)$, and τ is a learned temperature parameter. The cosine similarity is defined as $\operatorname{sim}(\mathbf{a}, \mathbf{b}) = \mathbf{a}^T\mathbf{b} \,/\, (\|\mathbf{a}\|_2 \, \|\mathbf{b}\|_2)$. Since both modalities share the same embedding space, image-to-image similarity can be computed directly via cosine similarity of their image embeddings, without requiring the text encoder at inference time.

In this work, we use the open-source ViT-B/32 checkpoint trained on the LAION-2B dataset [5] via the OpenCLIP library, which provides improved performance over the original OpenAI weights while retaining the same architecture.

Face-Aware Representation Learning (FaRL)

FaRL [2] begins from a standard CLIP ViT-B/16 backbone and continues pre-training on LAION-Face, a 20-million-image subset of LAION containing only images with detected human faces paired with their associated alt-text captions. The continued pre-training uses the same contrastive objective as Equation 1, but applied to face-centric data. This refines the visual encoder's representations to be significantly more sensitive to facial attributes — landmark geometry, expression, skin texture, facial proportions — while retaining CLIP's general visual understanding. Crucially, FaRL produces embeddings in the same $\mathbb{R}^{512}$ space and uses the same cosine similarity metric as standard CLIP, which makes the two models' outputs directly comparable after normalization.

System Architecture

The system operates in two phases: an **offline indexing phase** (run once) that pre-computes embeddings for all paintings, and an **online inference phase** (run per query) that encodes the user's selfie and retrieves the best matches. Figure 1 shows the full pipeline.

Methodology

Offline Embedding Computation

Given a gallery of N paintings $\{\mathbf{p}_1, \mathbf{p}_2, \ldots, \mathbf{p}_N\}$, we compute two embedding matrices. For vanilla CLIP with image encoder f_C:

$$\mathbf{e}_i^{\text{CLIP}} = \frac{f_C(\mathbf{p}_i)}{\|f_C(\mathbf{p}_i)\|_2}, \qquad \mathbf{E}^{\text{CLIP}} = \begin{bmatrix} (\mathbf{e}_1^{\text{CLIP}})^T \\ \vdots \\ (\mathbf{e}_N^{\text{CLIP}})^T \end{bmatrix} \in \mathbb{R}^{N\times 512} \tag{2}$$

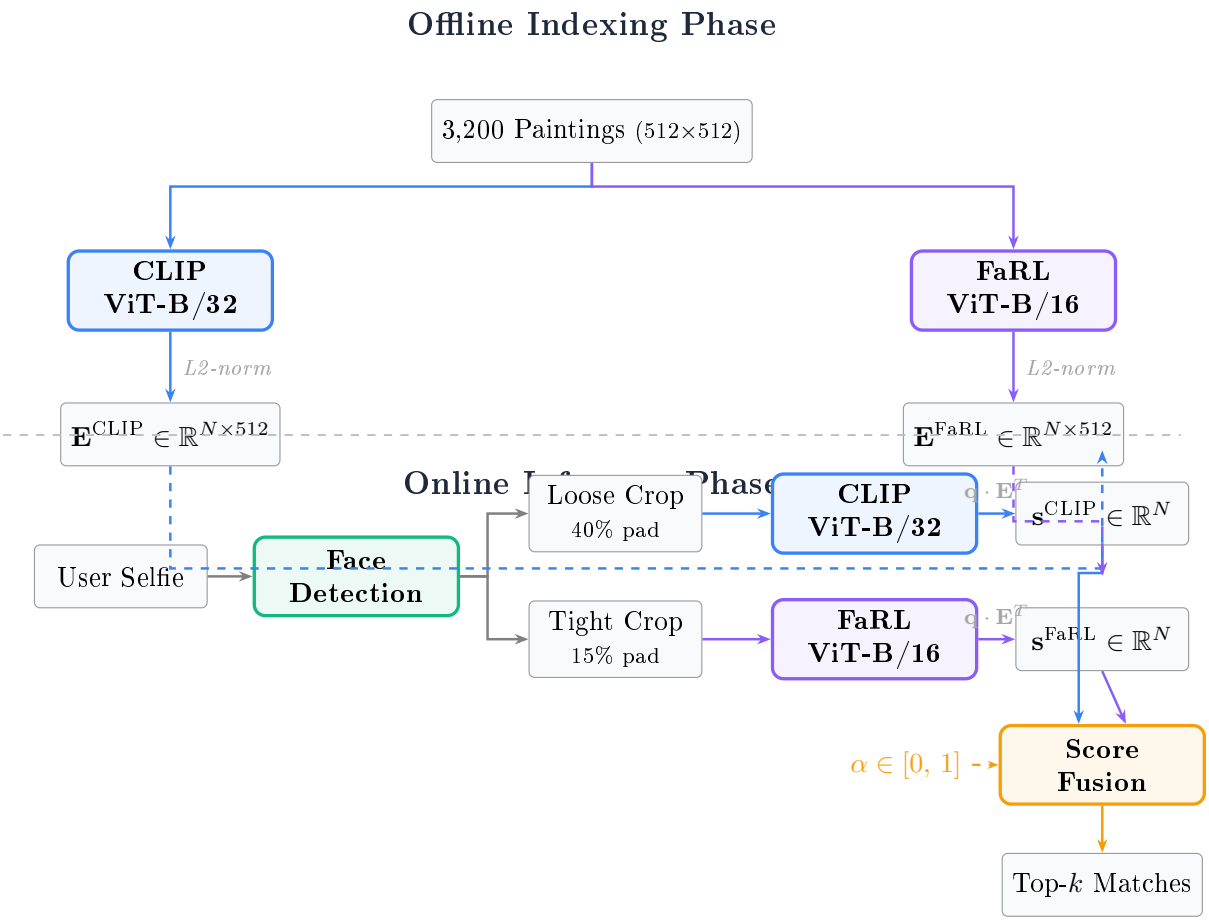

Figure 1: Full system architecture. The **offline phase** (top) pre-computes L2-normalized embeddings for all N paintings through both encoders and stores them on disk. The **online phase** (bottom) crops the user's face at two padding levels, encodes each crop through its respective model, computes cosine similarities against the stored galleries via matrix–vector products, and fuses the two score vectors with adjustable parameter α.

Analogously, for FaRL with image encoder f_F:

$$\mathbf{e}_i^{\text{FaRL}} = \frac{f_F(\mathbf{p}_i)}{\|f_F(\mathbf{p}_i)\|_2}, \qquad \mathbf{E}^{\text{FaRL}} \in \mathbb{R}^{N\times 512} \tag{3}$$

Both matrices are L2-normalized row-wise, so that cosine similarity reduces to a simple dot product at query time:

$$\text{sim}(\mathbf{a}, \mathbf{b}) = \frac{\mathbf{a}^T\mathbf{b}}{\|\mathbf{a}\|_2\,\|\mathbf{b}\|_2} = \mathbf{a}^T\mathbf{b} \quad \text{when } \|\mathbf{a}\|_2 = \|\mathbf{b}\|_2 = 1 \tag{4}$$

These matrices are computed once and stored as NumPy arrays on disk.

Face Detection and Dual Cropping

Given a user selfie $\mathbf{x}$, we first detect the dominant face using a Haar cascade classifier [6]. Let (x_0, y_0, w, h) denote the detected bounding box. We produce two crops with different context levels:

$$\mathbf{x}_{\text{loose}} = \text{crop}\big(\mathbf{x},\ x_0 - 0.4w,\ y_0 - 0.4h,\ 1.8w,\ 1.8h\big) \tag{5}$$

$$\mathbf{x}_{\text{tight}} = \text{crop}\big(\mathbf{x},\ x_0 - 0.15w,\ y_0 - 0.15h,\ 1.3w,\ 1.3h\big) \tag{6}$$

The loose crop (40% padding on each side) preserves hair, clothing, and background context — information that CLIP uses for "vibe" matching. The tight crop (15% padding) isolates facial geometry for FaRL's structural matching. If no face is detected, both crops default to the full original image, allowing the system to degrade gracefully rather than failing.

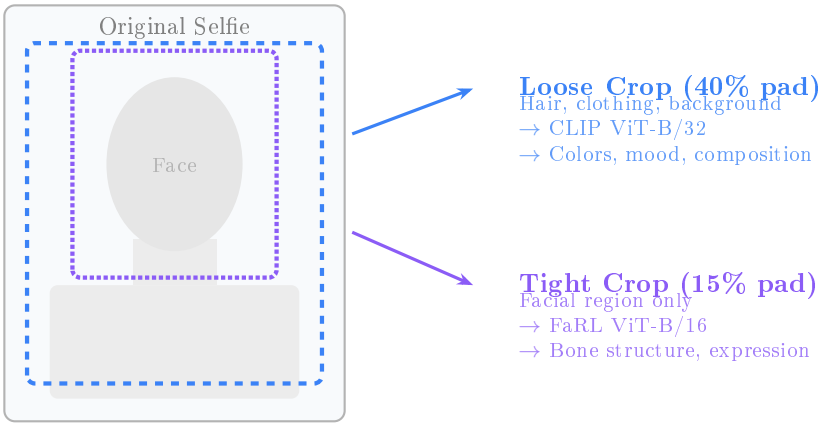

Figure 2: Dual cropping strategy. The loose crop (blue dashed) preserves contextual visual information for CLIP's holistic "vibe" matching. The tight crop (purple dotted) isolates facial geometry for FaRL's structural matching.

Similarity Computation

Each crop is encoded through its respective model and L2-normalized:

$$\mathbf{q}^{\text{CLIP}} = \frac{f_C(\mathbf{x}_{\text{loose}})}{\|f_C(\mathbf{x}_{\text{loose}})\|_2} \in \mathbb{R}^{512}, \qquad \mathbf{q}^{\text{FaRL}} = \frac{f_F(\mathbf{x}_{\text{tight}})}{\|f_F(\mathbf{x}_{\text{tight}})\|_2} \in \mathbb{R}^{512} \tag{7}$$

Because all embeddings are L2-normalized, cosine similarity reduces to a single matrix–vector product:

$$\mathbf{s}^{\text{CLIP}} = \mathbf{E}^{\text{CLIP}}\,\mathbf{q}^{\text{CLIP}} \in \mathbb{R}^N, \qquad \mathbf{s}^{\text{FaRL}} = \mathbf{E}^{\text{FaRL}}\,\mathbf{q}^{\text{FaRL}} \in \mathbb{R}^N \tag{8}$$

where $s_i^{\text{CLIP}} \in [-1, 1]$ is the cosine similarity between the user's selfie and the i-th painting according to CLIP, and analogously for FaRL.

Z-Score Normalization

A critical subtlety arises when fusing scores from two different models. Although both produce cosine similarities in $[-1, 1]$, their empirical score distributions differ substantially. CLIP similarities for photo-to-painting comparisons typically cluster in a narrow range around $[0.15, 0.35]$, while FaRL scores may occupy a different range with different variance. If one model's scores have a wider spread, it will dominate the blended ranking regardless of the blending parameter.

We resolve this via z-score normalization, which standardizes each score vector to zero mean and unit variance:

$$\hat{s}_i^{\text{CLIP}} = \frac{s_i^{\text{CLIP}} - \mu(\mathbf{s}^{\text{CLIP}})}{\sigma(\mathbf{s}^{\text{CLIP}}) + \epsilon}, \qquad \hat{s}_i^{\text{FaRL}} = \frac{s_i^{\text{FaRL}} - \mu(\mathbf{s}^{\text{FaRL}})}{\sigma(\mathbf{s}^{\text{FaRL}}) + \epsilon} \tag{9}$$

where $\mu(\cdot)$ and $\sigma(\cdot)$ denote the sample mean and standard deviation computed over all N paintings for a given query, and $\epsilon = 10^{-8}$ prevents division by zero. After normalization, a score of $\hat{s} = +2$ in either model carries the same meaning: "this painting is 2 standard deviations above average similarity" — a directly comparable statement regardless of the models' raw score scales.

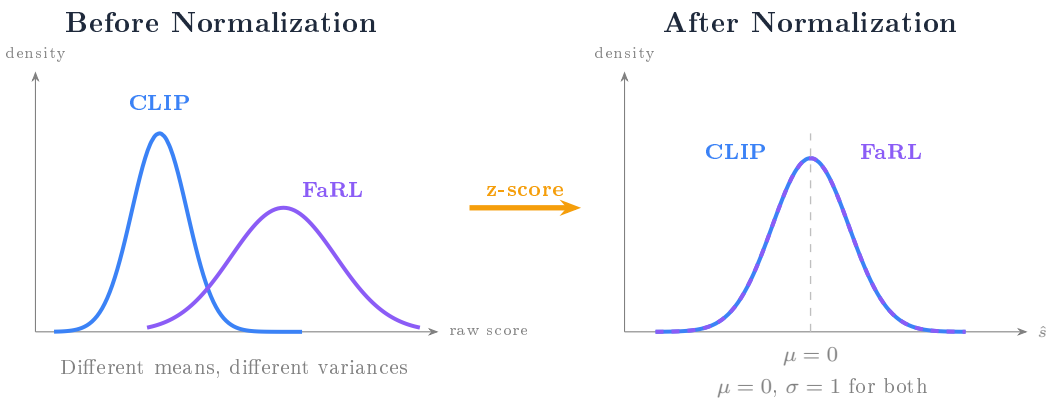

Figure 3: Z-score normalization aligns the score distributions from both models. Without normalization (left), the model with wider spread dominates the ranking regardless of α. After normalization (right), both distributions share zero mean and unit variance, ensuring α behaves as a true linear interpolation.

Score Fusion with Adjustable α

The normalized scores are fused via a convex combination controlled by parameter $\alpha \in [0, 1]$:

$$\boxed{s_i^{\text{final}} = \alpha \cdot \hat{s}_i^{\text{CLIP}} + (1 - \alpha) \cdot \hat{s}_i^{\text{FaRL}}} \tag{10}$$

The interpretation is intuitive: $\alpha = 1$ yields pure artistic/vibe matching (CLIP only), $\alpha = 0$ yields pure facial resemblance matching (FaRL only), and $\alpha = 0.5$ gives equal weight to both signals. The z-score normalization from Equation 9 guarantees that α behaves linearly — moving the slider from 0.5 to 0.6 always shifts the balance by the same perceptual amount, regardless of the models' raw score distributions.

The top-k results are retrieved by:

$$\mathcal{R}_k = \underset{i \in \{1,\ldots,N\}}{\arg\text{top-k}} \; s_i^{\text{final}} \tag{11}$$

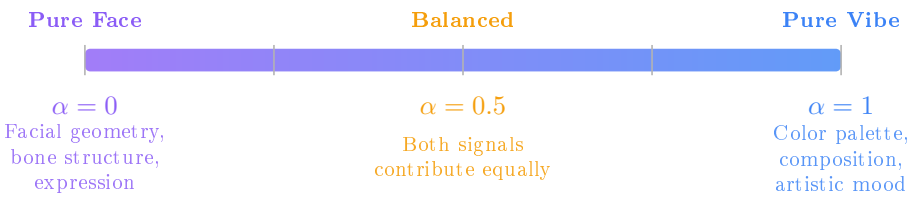

Figure 4: The α parameter provides a continuous interpolation between facial resemblance ($\alpha = 0$, FaRL only) and artistic vibe ($\alpha = 1$, CLIP only). Users control this via a slider in the web interface or via discrete Telegram commands (`/face` and `/vibe`).

Algorithm

The complete inference procedure is summarized in Algorithm 1.

Dataset

The painting gallery consists of approximately 3,200 artworks drawn from two sources.

Algorithm 1 Dual-Encoder Face-to-Art Matching

Require: User selfie $\mathbf{x}$, blending parameter $\alpha \in [0, 1]$, return count k
Require: Pre-computed galleries $\mathbf{E}^{\text{CLIP}}, \mathbf{E}^{\text{FaRL}} \in \mathbb{R}^{N \times 512}$
Ensure: Top-k painting matches with fused similarity scores

Face Detection:
  $(x_0, y_0, w, h) \leftarrow \text{HaarCascade}(\mathbf{x})$
if no face detected **then**
  $\mathbf{x}_{\text{loose}} \leftarrow \mathbf{x}; \quad \mathbf{x}_{\text{tight}} \leftarrow \mathbf{x}$
else
  $\mathbf{x}_{\text{loose}} \leftarrow \text{crop}(\mathbf{x},\ 40\%\ \text{padding})$ ▷ Eq. 5
  $\mathbf{x}_{\text{tight}} \leftarrow \text{crop}(\mathbf{x},\ 15\%\ \text{padding})$ ▷ Eq. 6
end if

Dual Encoding:
  $\mathbf{q}^{\text{CLIP}} \leftarrow \text{L2-normalize}\big(f_C(\text{preprocess}_C(\mathbf{x}_{\text{loose}}))\big)$
  $\mathbf{q}^{\text{FaRL}} \leftarrow \text{L2-normalize}\big(f_F(\text{preprocess}_F(\mathbf{x}_{\text{tight}}))\big)$

Similarity Computation:
  $\mathbf{s}^{\text{CLIP}} \leftarrow \mathbf{E}^{\text{CLIP}} \cdot \mathbf{q}^{\text{CLIP}}$ ▷ shape $[N]$
  $\mathbf{s}^{\text{FaRL}} \leftarrow \mathbf{E}^{\text{FaRL}} \cdot \mathbf{q}^{\text{FaRL}}$ ▷ shape $[N]$

Z-Score Normalization:
  $\hat{\mathbf{s}}^{\text{CLIP}} \leftarrow \big(\mathbf{s}^{\text{CLIP}} - \mu(\mathbf{s}^{\text{CLIP}})\big) \ / \ \big(\sigma(\mathbf{s}^{\text{CLIP}}) + \epsilon\big)$
  $\hat{\mathbf{s}}^{\text{FaRL}} \leftarrow \big(\mathbf{s}^{\text{FaRL}} - \mu(\mathbf{s}^{\text{FaRL}})\big) \ / \ \big(\sigma(\mathbf{s}^{\text{FaRL}}) + \epsilon\big)$

Score Fusion:
  $\mathbf{s}^{\text{final}} \leftarrow \alpha \cdot \hat{\mathbf{s}}^{\text{CLIP}} + (1 - \alpha) \cdot \hat{\mathbf{s}}^{\text{FaRL}}$ ▷ Eq. 10

return indices and scores of top-k entries in $\mathbf{s}^{\text{final}}$

The primary source is the WikiArt dataset (accessed via the `huggan/wikiart` repository on HuggingFace), from which approximately 3,000 portrait-genre paintings were filtered. WikiArt provides images across 27 art movements spanning multiple centuries, with associated metadata including artist name, title, year, and stylistic movement.

The secondary source is a hand-curated collection of approximately 200 famous, instantly recognizable portraits selected for cultural impact and global recognizability. These span the Western canon (da Vinci, Vermeer, Rembrandt, Klimt, Picasso, Kahlo, Van Gogh), Russian art (Kramskoy, Serov, Vrubel, Repin), East Asian art (Utamaro, Sharaku, Tang dynasty court portraits), and other traditions (Fayum mummy portraits, Mughal miniatures, Mexican muralism). Each famous painting includes a curated "fun fact" to enhance the user experience and encourage social sharing.

All images are resized to 512×512 pixels and stored as JPEG at quality 85. Although both CLIP and FaRL internally resize inputs to 224×224, storing at 512×512 preserves sufficient detail for the comparison card display.

Model Specifications

Table 1 summarizes the two models and their complementary roles.

The key design insight is that both models map images into the *same* $\mathbb{R}^{512}$ space and use

Table 1: Dual encoder specifications.

Property	**CLIP ViT-B/32**	**FaRL ViT-B/16**
Architecture	Vision Transformer [4]	Vision Transformer [4]
Patch size	32×32	16×16
Embedding dim.	512	512
Parameters (visual enc.)	∼88M	∼86M
Pre-training data	LAION-2B [5]	LAION-Face 20M [2]
Pre-training objective	Image–text contrastive	Face–text contrastive
Input resolution	224×224	224×224
Primary signal captured	Style, color, composition	Facial geometry, expression
Selfie crop used	Loose (40% pad)	Tight (15% pad)

cosine similarity as their distance metric, but they weight visual features differently due to their distinct training data. CLIP, trained on billions of general image–text pairs, learns to encode holistic visual properties. FaRL, fine-tuned on 20 million face–text pairs, develops heightened sensitivity to facial structure. By fusing their outputs after z-score normalization, we capture both dimensions of similarity that make a face-to-painting match feel compelling.

Deployment Architecture

The system is deployed across two user-facing interfaces that share the same backend modules. Figure 5 shows the deployment topology.

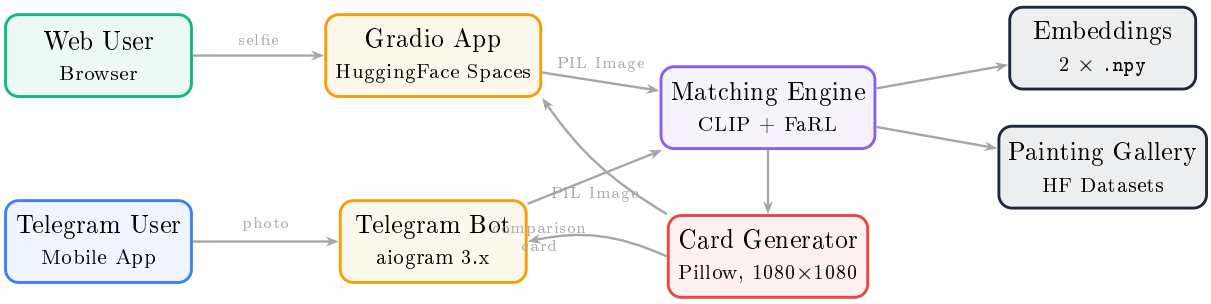

Figure 5: Deployment architecture. Both the Gradio web app and the Telegram bot share the same matching engine and card generator modules. Painting images are hosted on HuggingFace Datasets; pre-computed embeddings are stored as `.npy` files alongside the application code.

The Gradio interface exposes the α parameter as a continuous slider, allowing real-time exploration of the vibe–face spectrum. The Telegram bot provides discrete modes via commands: `/vibe` ($\alpha = 0.8$, CLIP-heavy), the default ($\alpha = 0.5$), and `/face` ($\alpha = 0.2$, FaRL-heavy). Both interfaces generate a shareable 1080×1080 comparison card using Pillow, placing the user's selfie alongside their top match with overlaid metadata and similarity scores.

Concurrency in the Telegram bot is managed via an `asyncio.Semaphore(3)`, limiting simultaneous model inferences to prevent resource exhaustion on consumer hardware.

Computational Complexity

Table 2 breaks down the inference cost per query.

Table 2: Inference time breakdown (Apple M4 Max, MPS backend; $N = 3{,}200$).

Step	**FLOPs**	**Wall Time**
Face detection (Haar cascade)	Negligible	∼5 ms
CLIP ViT-B/32 forward pass	$\sim 4.4 \times 10^9$	∼15 ms
FaRL ViT-B/16 forward pass	$\sim 17.6 \times 10^9$	∼25 ms
Similarity (2 mat-vec products)	$2 \times N \times 512$	<1 ms
Z-score normalization + fusion	$O(N)$	<1 ms
Top-k selection	$O(N \log k)$	<1 ms
Total (MPS)		**∼50 ms**
Total (CPU, HF Spaces)		**∼500 ms**

The FaRL forward pass requires roughly 4× the FLOPs of CLIP ViT-B/32 because ViT-B/16 processes $14 \times 14 = 196$ patches versus ViT-B/32's $7 \times 7 = 49$ patches at the same 224×224 input resolution, and self-attention scales quadratically with the number of tokens.

The offline embedding computation for $N = 3{,}200$ paintings requires two full passes through the gallery (one per model), taking approximately 3–5 minutes on the M4 Max with batched inference at batch size 64. Memory footprint at runtime is approximately 1.5 GB for both models plus roughly 13 MB for the two embedding matrices ($2 \times 3200 \times 512 \times 4$ bytes in float32), comfortably fitting within the 16 GB available on HuggingFace Spaces' free tier.

Limitations and Future Work

The Haar cascade face detector [6] is a legacy algorithm that struggles with non-frontal faces, heavy occlusion, and paintings with unusual proportions (e.g., Modigliani's elongated figures). Replacing it with a modern detector such as MediaPipe Face Mesh or RetinaFace would improve detection coverage, particularly for non-Western art styles that the Haar cascade was not designed for.

FaRL, while more face-aware than vanilla CLIP, was pre-trained on photographic faces. Its performance degrades on highly abstract or stylized portraits (Expressionism, Cubism, Fauvist works) where facial geometry is deliberately distorted. Investigating domain adaptation via fine-tuning on a painting-specific face dataset could improve cross-domain performance.

The z-score normalization assumes a roughly unimodal score distribution per query. If the gallery contains a strong cluster of very similar paintings (e.g., multiple self-portraits by the same artist), the normalization may be skewed. Robust alternatives such as median/MAD normalization could address this edge case.

Future directions include adding a text-based query mode leveraging CLIP's text encoder, expanding the gallery to 10,000+ paintings with automated quality filtering, and exploring learned fusion weights (e.g., training a small MLP to predict optimal α per query).

Conclusion

We presented a dual-encoder face-to-art matching system that fuses holistic visual similarity from CLIP with facial structural similarity from FaRL through a z-score normalized blending mechanism. The adjustable α parameter gives users direct control over the matching behavior, and the z-score normalization ensures this control is perceptually linear. The system runs at interactive speeds on consumer hardware and is deployed as both a web application and a

Telegram bot. The combination of artistic "vibe" and facial resemblance produces matches that are both personally meaningful and aesthetically compelling.

References

[1] A. Radford, J. W. Kim, C. Hallacy, A. Ramesh, G. Goh, S. Agarwal, G. Sastry, A. Askell, P. Mishkin, J. Clark, G. Krueger, and I. Sutskever, "Learning transferable visual models from natural language supervision," in *Proc. International Conference on Machine Learning (ICML)*, 2021.

[2] Y. Zheng, H. Yang, T. Zhang, J. Bao, D. Chen, Y. Huang, L. Yuan, D. Chen, M. Zeng, and F. Wen, "General facial representation learning in a visual-linguistic manner," in *Proc. IEEE/CVF Conference on Computer Vision and Pattern Recognition (CVPR)*, pp. 18697–18709, 2022.

[3] J. Deng, J. Guo, N. Xue, and S. Zafeiriou, "ArcFace: Additive angular margin loss for deep face recognition," in *Proc. IEEE/CVF Conference on Computer Vision and Pattern Recognition (CVPR)*, pp. 4690–4699, 2019.

[4] A. Dosovitskiy, L. Beyer, A. Kolesnikov, D. Weissenborn, X. Zhai, T. Unterthiner, M. Dehghani, M. Minderer, G. Heigold, S. Gelly, J. Uszkoreit, and N. Houlsby, "An image is worth 16×16 words: Transformers for image recognition at scale," in *Proc. International Conference on Learning Representations (ICLR)*, 2021.

[5] C. Schuhmann, R. Beaumont, R. Vencu, C. Gordon, R. Wightman, M. Cherti, T. Coombes, A. Katta, C. Mullis, M. Wortsman, P. Schramowski, S. Kundurthy, K. Crowson, L. Schmidt, R. Kaczmarczyk, and J. Jitsev, "LAION-5B: An open large-scale dataset for training next generation image-text models," in *Proc. NeurIPS Datasets and Benchmarks Track*, 2022.

[6] P. Viola and M. Jones, "Rapid object detection using a boosted cascade of simple features," in *Proc. IEEE/CVF Conference on Computer Vision and Pattern Recognition (CVPR)*, vol. 1, pp. 511–518, 2001.