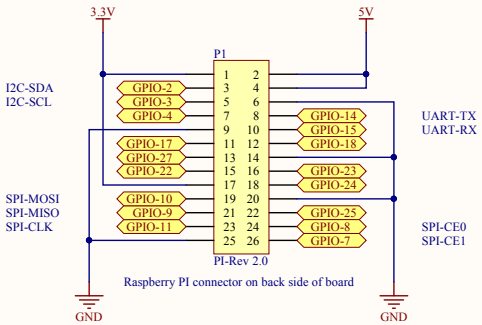

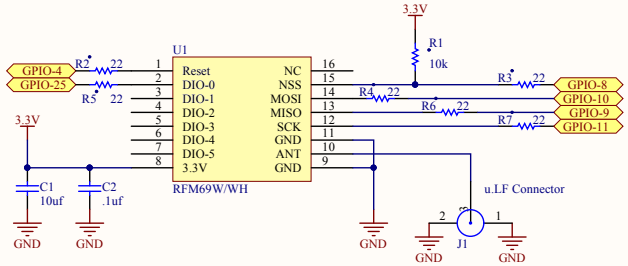

Notes:

This board is designed for a Raspberry PI-2 to hold a Moteino or a Moteino Mega or an RFM69W radio. Not tested with a PI B+, but may fit.

R1-R8 can be anything from 0 ohms to about 47 ohms, I use 22 ohms and are needed only for the RFM69W radio (R2 is NOT used)

R9-R12 are for LED and can be any value for ~390 ohms to 1k, depending on leds your using

P2 need to be removed IF you programming the Moteino via the FTDI serial connector on the board

LED as marked on the PWB:
- D1 Radio Error
- D2 Radio RX
- D3 Radio TX
- D4

Parts:
- All SMD are 0805 size
- LED's LTST-C171AKT Amber
- 10uf 10v 0805 VJ0805G106KXQTBC or equiv
- .1uf 50v, VJ0805Y104KXAAT or equiv
- U.LF Hirose U.FL.R-SMT01
- P1; Samtec SSQ-113-T-D 26 pin, FCI 68683-313LF or equiv
- P2; Standard 2 pin .1in center headed with shunt
- Motino sockets; Samtec TS and SL series of machine pin connectors. I use a varient from China

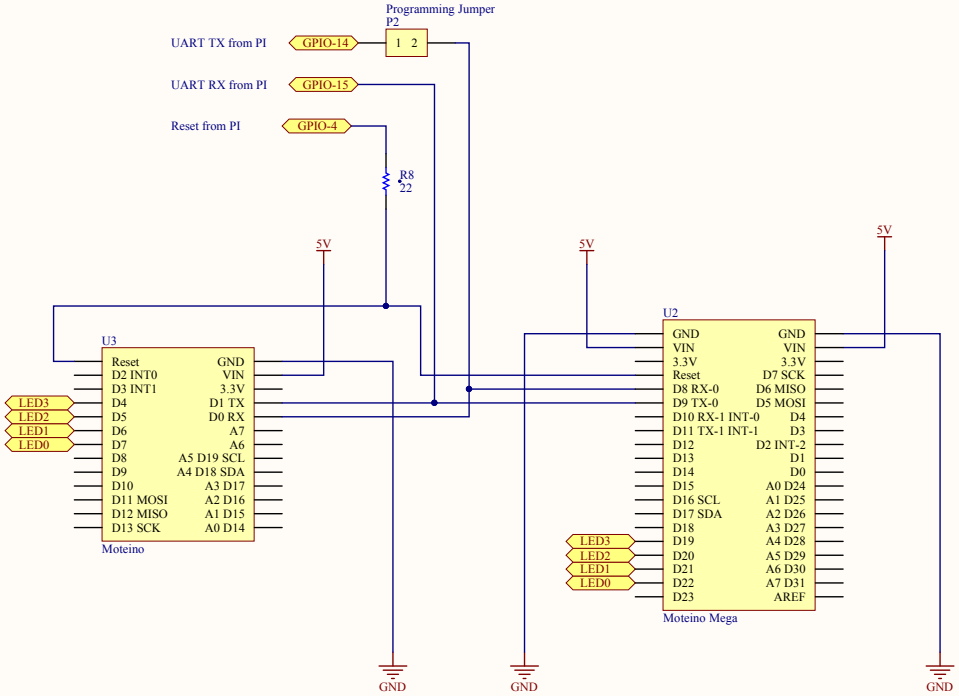

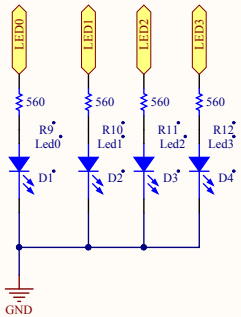

Title	***Raspberry PI - Moteino Gateway***		*Lafleur Designs* * * * *
Size: B	Number:*	Revision:1A	
Date: 5/17/2015	Time: 11:32:13 AM	Sheet 1 of 1	
File: C:\Users\Lafleur\Desktop\Altium Projects\PI2-Moteino\PI2-Moteino.SchDoc			

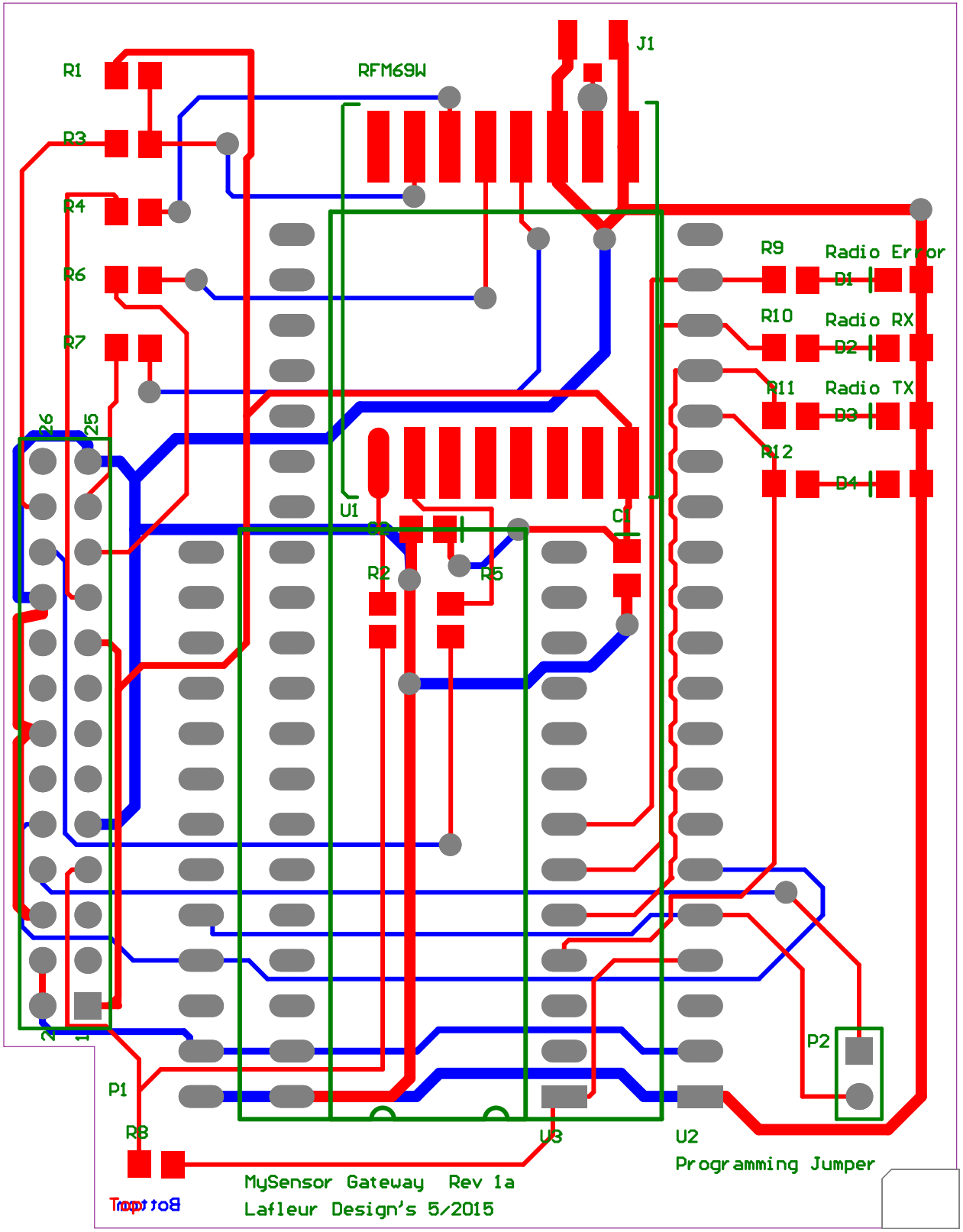
R1
R3
R4
R6
R7
RFM69W
J1
R9
Radio Error
D1
R10
Radio RX
D2
R11
Radio TX
D3
R12
D4
U1
C1
R2
R5
26
25
2
1
P1
R8
U3
U2
P2
Programming Jumper
MySensor Gateway Rev 1a
Lafleur Design's 5/2015
Top to Bot