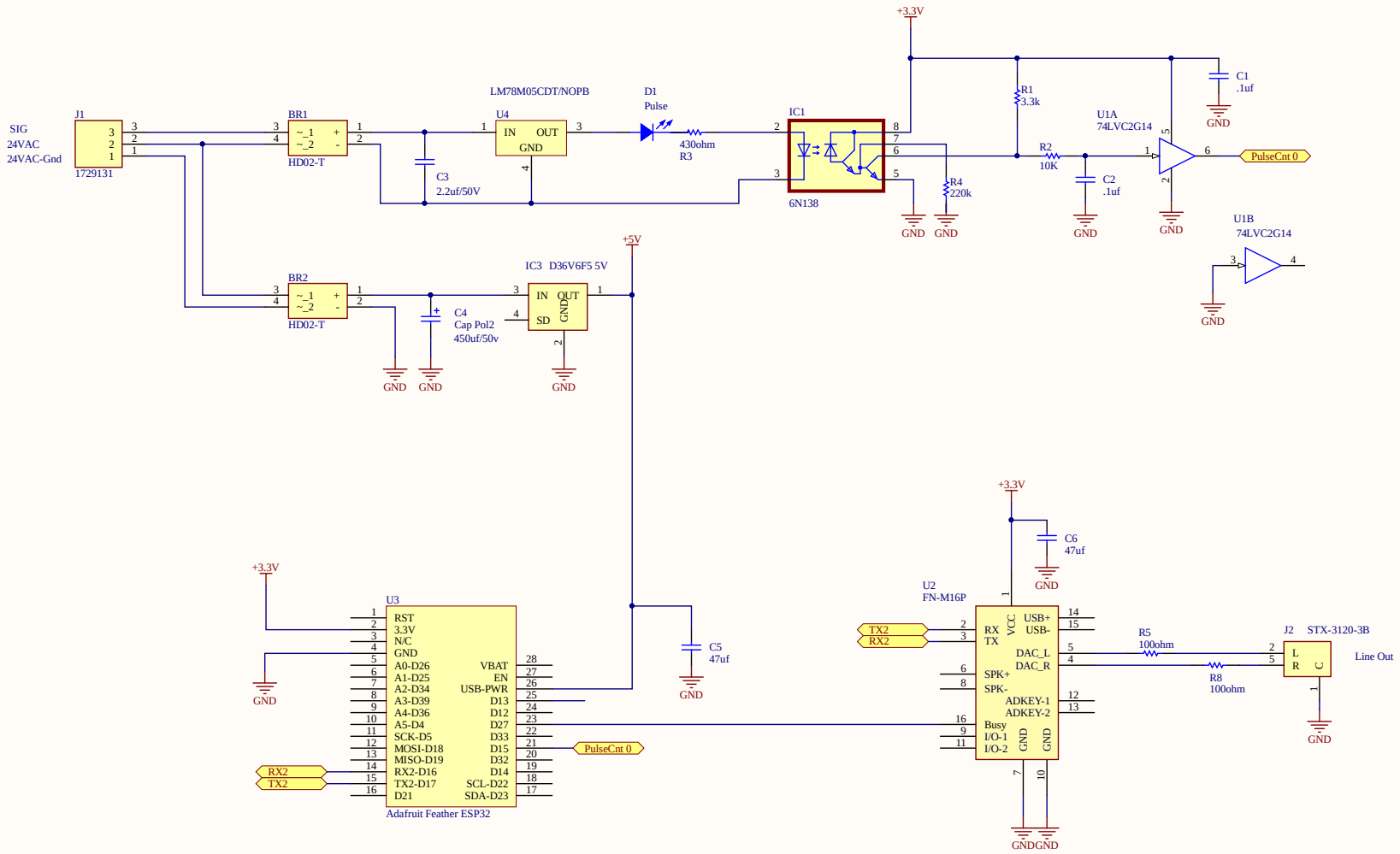

Title	*Seeburg-2 MP3*		*Lafleur Designs*
Size: B	Number: MP3	Revision: 2	
Date: 7/2/2022	Time: 10:32:46 AM	Sheet 1 of 1	
File: C:\Users\lafleur\Desktop\Altium Projects\Projects\Seeburg-Rev2\Sheet1.SchDoc			

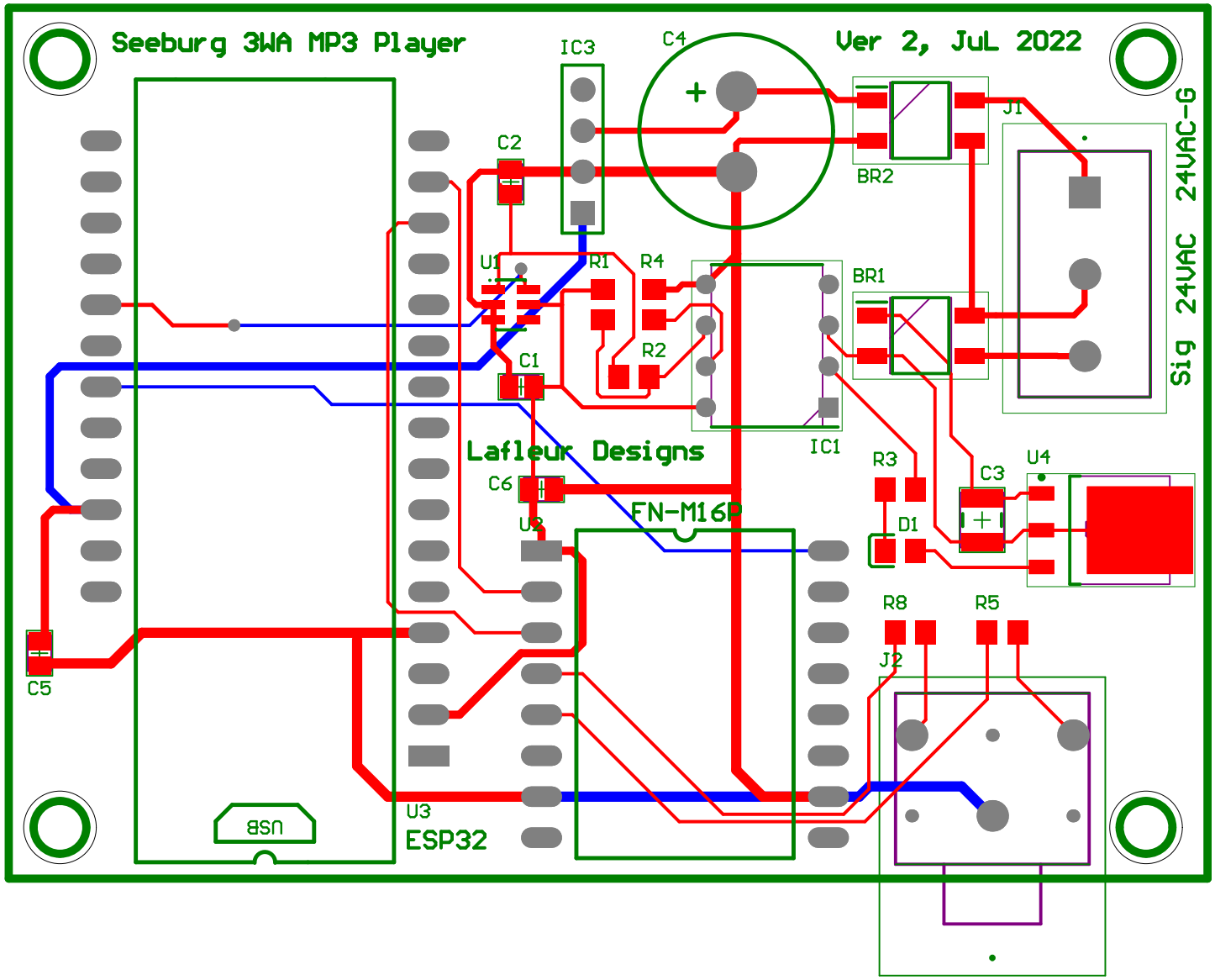
Seeburg 3WA MP3 Player
Ver 2, JuL 2022
IC3
C4
C2
U1
R1
R4
R2
C1
BR2
BR1
J1
Sig 24VAC 24VAC-G
IC1
Lafleur Designs
C6
U2
FN-M16P
R3
D1
C3
U4
R8
R5
J2
C5
U3
ESP32
USB