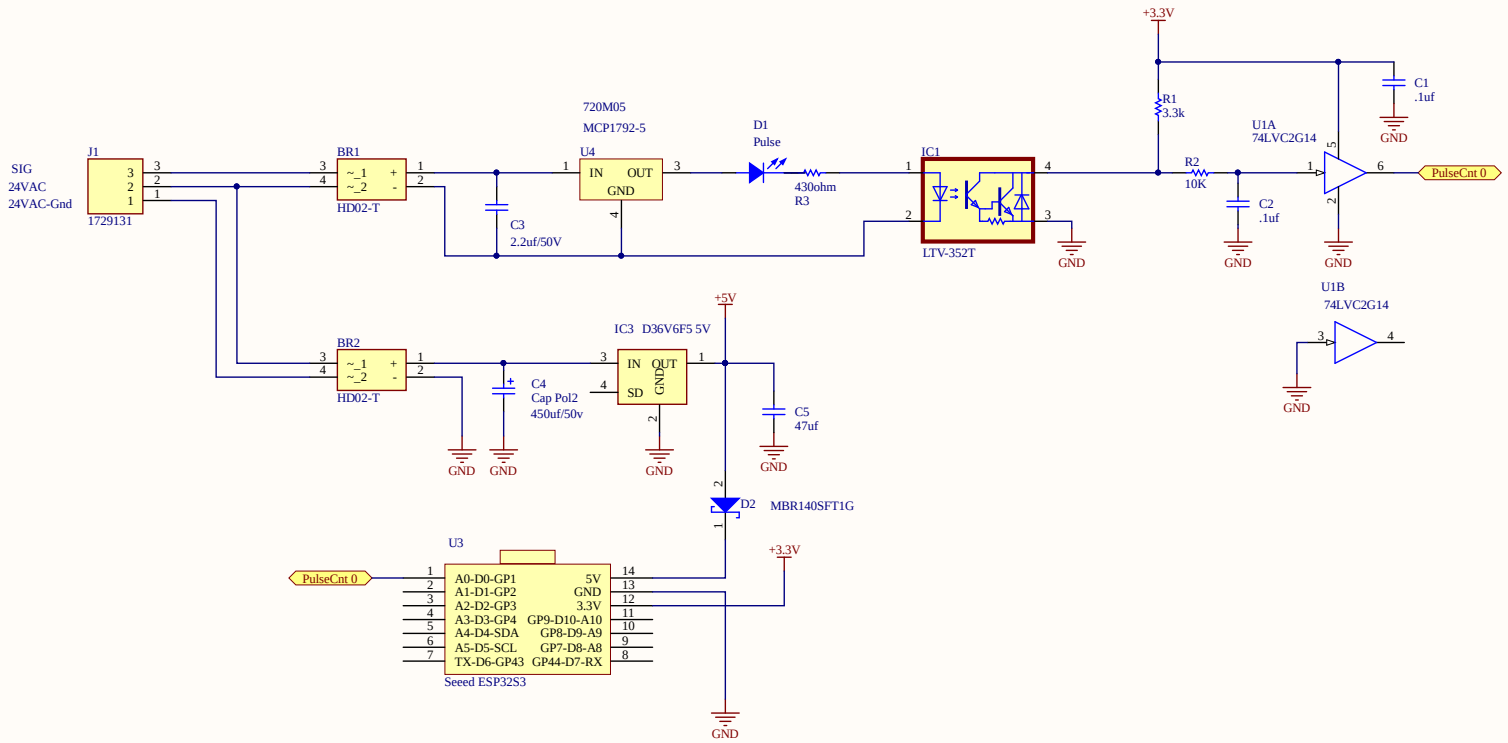

Title	***Seeburg-Mini***		*Lafleur Designs*
Size: B	Number: MP3	Revision: 2	
Date: 7/30/2023	Time: 11:35:13 AM	Sheet 1 of 1	
File: C:\Users\lafleur\Desktop\Altium Projects\Projects\Seeburg-Mini\Sheet1.SchDoc			

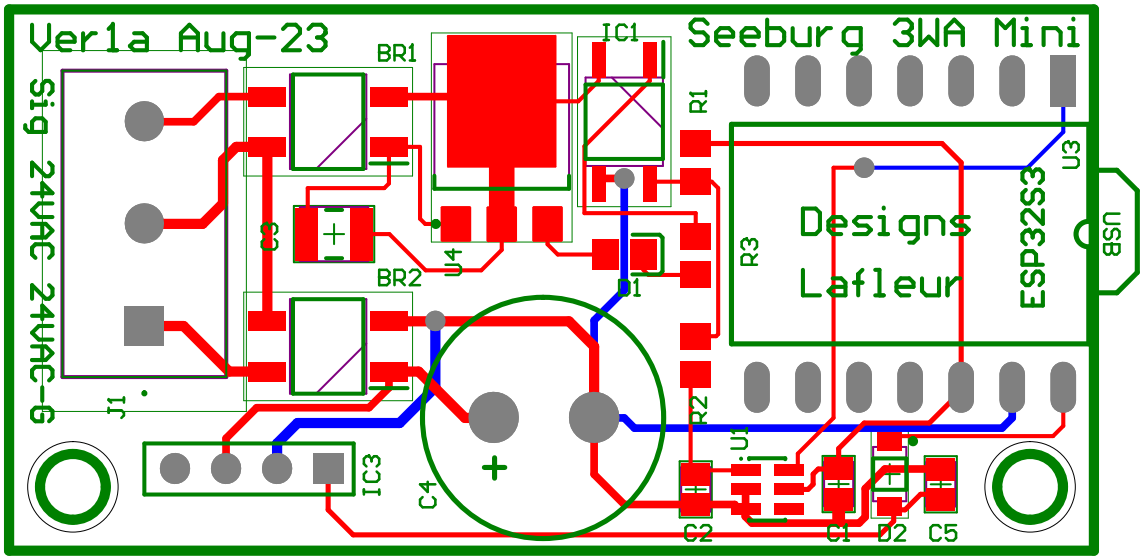
Ver1a Aug-23
Seeburg 3WA Mini
Sig 24VAC 24VAC-G
J1
BR1
BR2
C3
U4
IC1
D1
R1
R2
R3
Designs
Lafleur
ESP32S3
U3
USB
U1
C1
C2
C4
C5
D2
IC3