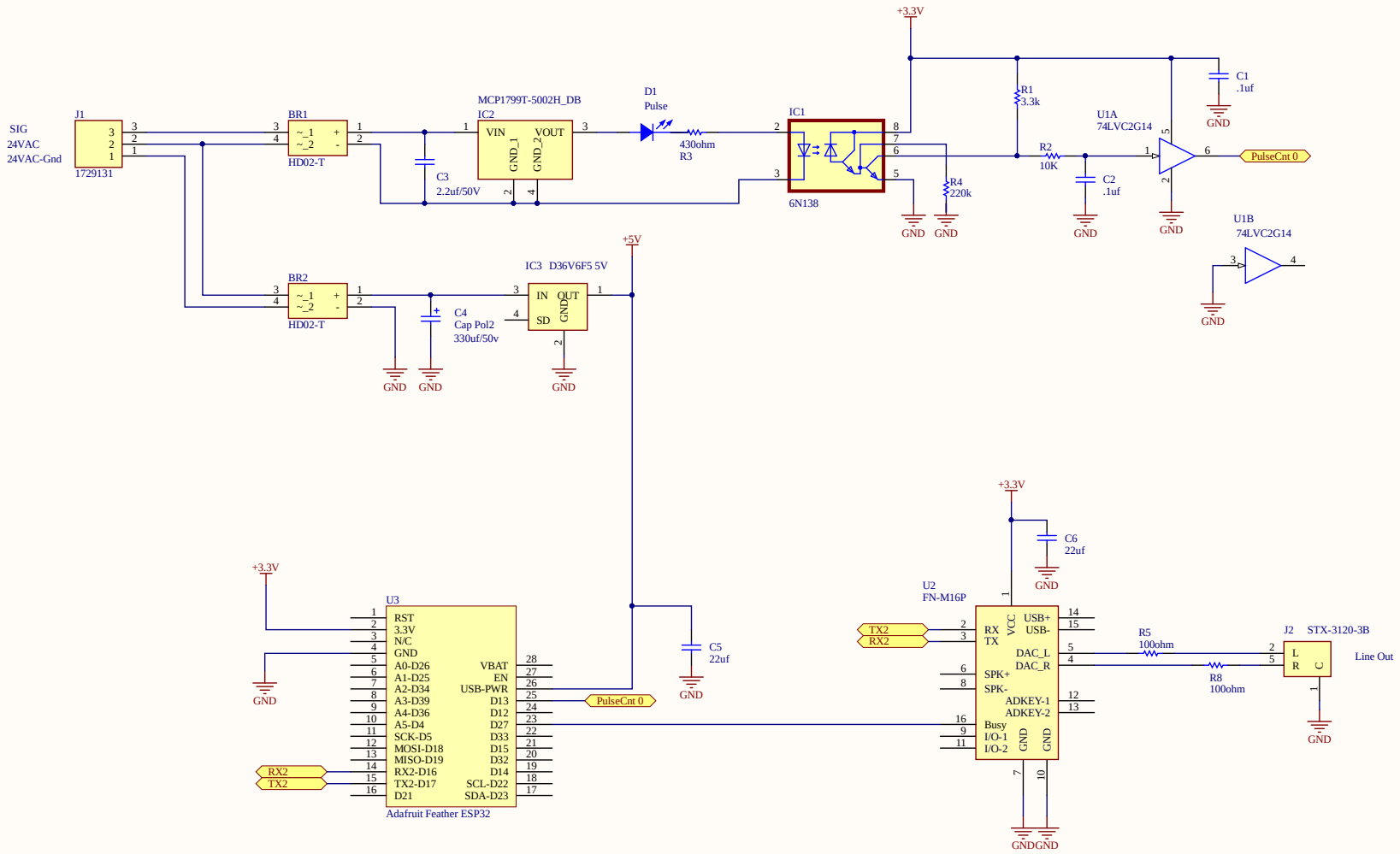

Title	*Seeburg MP3*		*Lafleur Designs*
Size: B	Number: MP3	Revision: 1	
Date: 6/13/2022	Time: 8:09:17 AM	Sheet 1 of 1	
File: C:\Users\lafleur\Desktop\Altium Projects\Projects\Seeburg\Sheet1.SchDoc			

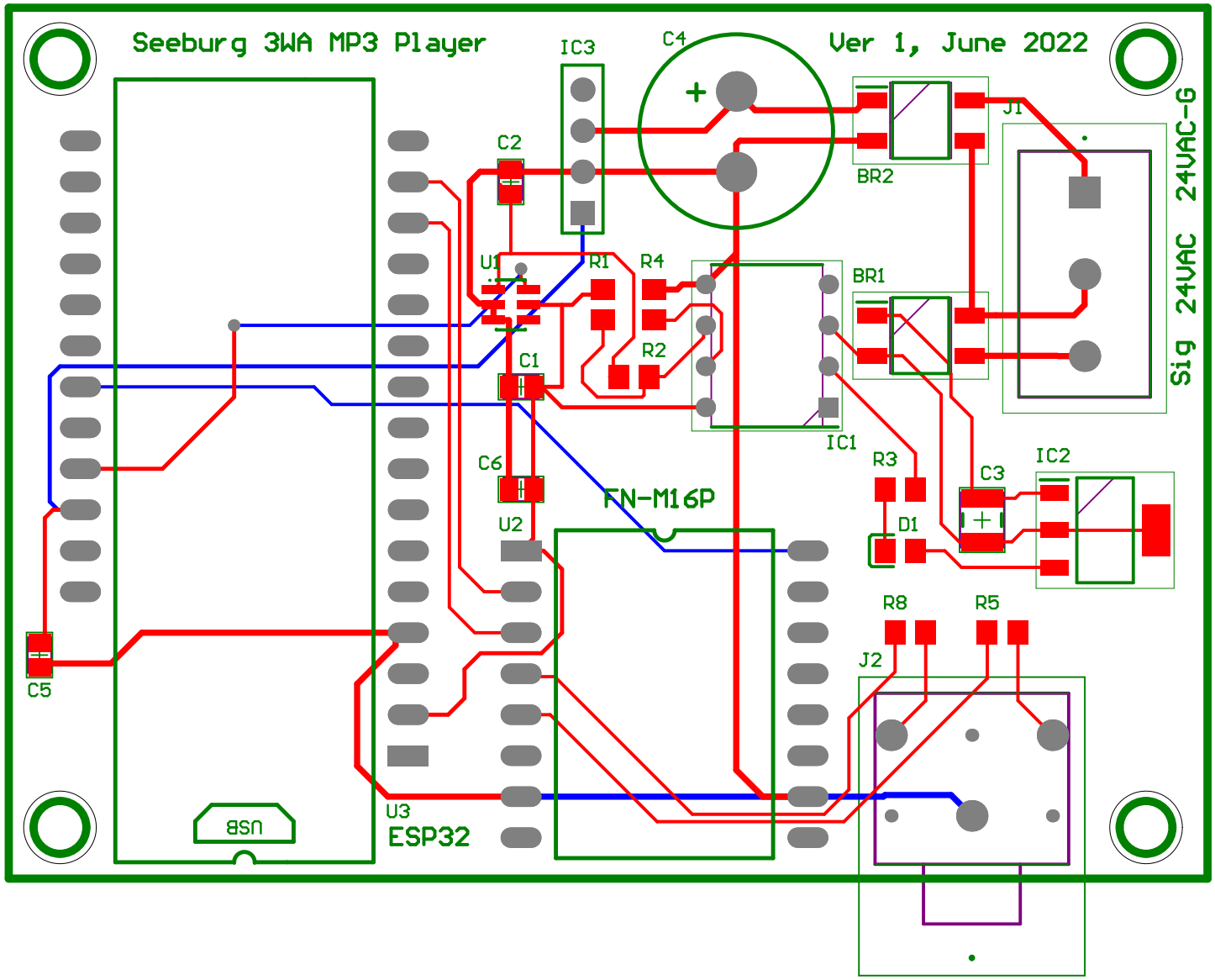
Seeburg 3WA MP3 Player
Ver 1, June 2022
IC3
C4
C2
U1
R1
R4
R2
C1
C6
U2
FN-M16P
BR2
BR1
J1
Sig 24VAC 24VAC-G
IC1
R3
D1
C3
IC2
R8
R5
J2
C5
USB
U3
ESP32