REV.	SYMBOL	DESCRIPTION	NAME	DATE
0		FIRST ISSUE	XIA.HONG	DEC-03-2018
A	⚠	MODIFY LCD PIN AND INTERFACE	XIA.HONG	DEC-19-2018

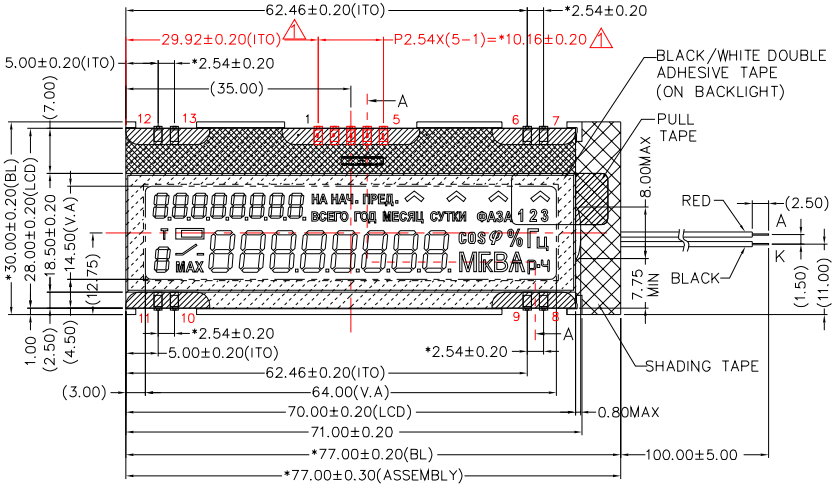

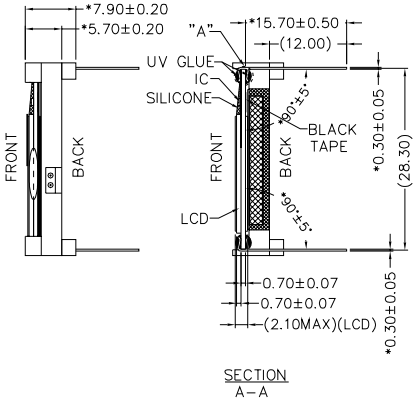

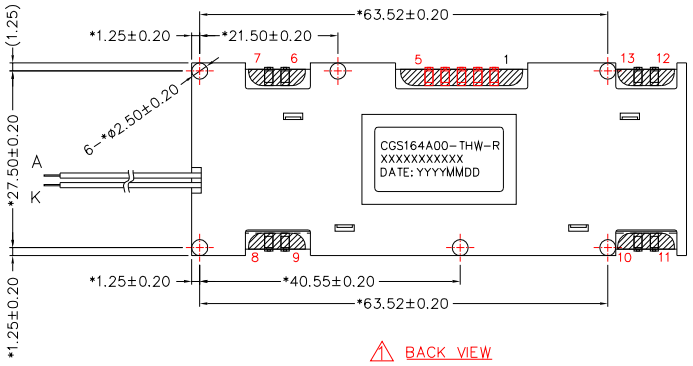

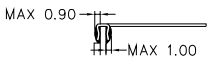

DETAIL"A"

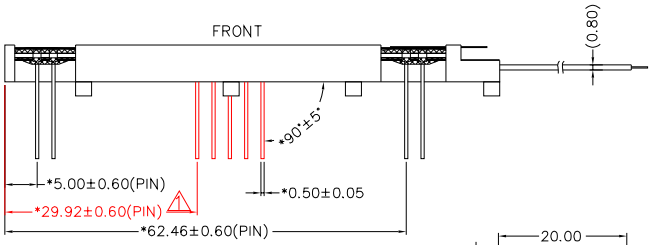

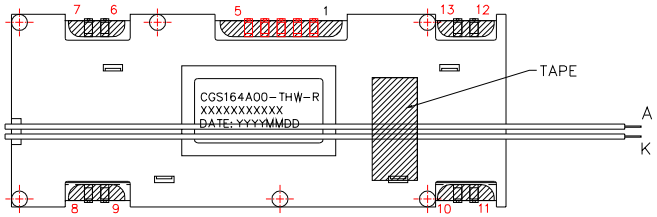

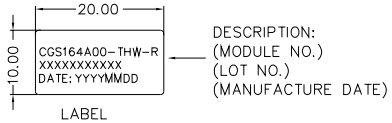

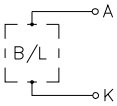

CONSTANT CURRENT: 15mA, Vf= 4.0V(REF.)
BACKLIGHT DRIVER CIRCUIT DIAGRAM

⚠ LCD PIN INTERFACE

PIN	1	2	3	4	5	6-13
CONNECTOR	SDA	SCL	VDD	VSS	VLCD	NC

ITEM	PARAMETERS	ITEM	PARAMETERS
DISPLAY TYPE	TN,POSITIVE	VIEWING DIRECTION	6 O'CLOCK
DRIVING METHOD	1/2 DUTY,1/2 BIAS	OPERATING TEMPERATURE	-40°C TO +70°C
POLARIZER TYPE	TRANSFLECTIVE	STORAGE TEMPERATURE	-40°C TO +70°C
LCD OPERATING VOLTAGE	5.0V(REF.)	IC	UC1677c
LOGIC VOLTAGE(VDD)	3.3V	BACKLIGHT	EDGE,WHITE(1LED)
GRAY SCALE SUPPORT	NO	CONNECTOR	COG+PIN

MARK"*"ARE IMPORTANT DIMENSIONS,MARK"()"ARE REFERENCE DIMENSIONS,MARK★"ARE SPECIAL CHARACTERISTICS RELATED TO SAFETY,MARK☆" ARE SPECIAL CHARACTERISTICS IRRELEVANT TO SAFETY,MARK"●"ARE IMPROTANT CHARACTERISTICS EXCEPT FOR THE SPECIAL CHARACTERISTICS.

RoHS/REACH COMPLIANT			YES
UNMARKED TOLERANCE			±0.30
SCALE	FIT	UNIT	mm
SHEET	1 OF 2	REV.	A

秋田微电子 AVDISPLAY

TITLE	LCM		NAME	DATE
PART NO.	/	DRAWN	Xia.Hong	DEC-19-2018
MODULE NO.	CGS164A00-THW-R	CHECKED	YanHui.Li	DEC-19-2018
CUSTOMER NO.	RFQ#031 FRUNZE 1/2	APPROVED	Bibo.Xiong	DEC-19-2018

THIS DRAWING IS PROPERTY OF AV-DISPLAY CO. LIMITED,IT CANNOT BE REPRODUCED WITHOUT PERMISSION.

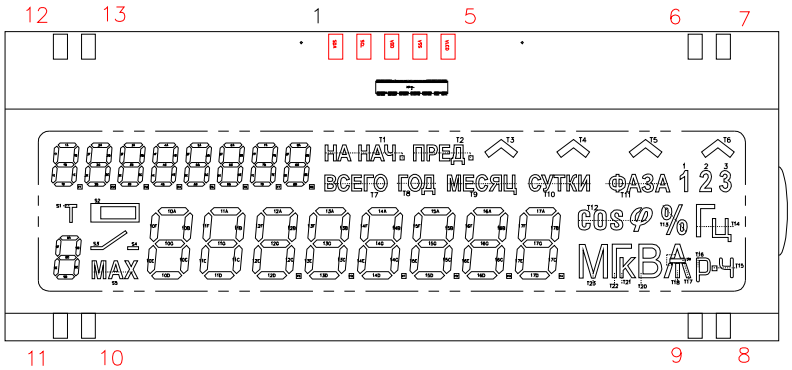

LCD DISPLAY EFFECT

PIN	S0<40>	S0<41>	S0<42>	S0<43>	S0<44>	S0<45>	S0<46>	S0<47>	S0<48>	S0<49>	S0<50>	S0<51>	S0<52>	S0<53>	S0<54>	S0<55>	S0<56>	S0<57>	S0<58>	S0<59>	S0<60>
B0<0>	13A	14F	14G	14B	14A	15F	15G	15B	15A	16F	16G	16B	16A	17F	17G	17B	17A	T12	T22	T13	T17
B0<1>	P10	14E	14D	14C	P11	15E	15D	15C	P12	16E	16D	16C	P13	17E	17D	17C	P14	T23	T21	T20	T18

PIN	S0<61>	S0<62>	S0<63>	S0<64>	S0<65>	S0<66>	S0<67>	S0<68>	S0<69>	S0<70>	S0<71>	S0<72>	S0<73>	S0<74>	S0<75>	S0<76>	S0<77>	S0<78>	S0<79>	S0<80>	S0<81>
B0<0>	T19	T14	3	2	T11	T10	T9	T8	T7	8D	8C	8G	8E	7D	7C	7G	7E	6D	6C	6G	6E
B0<1>	T16	T15	T6	1	T5	T4	T3	T2	T1	P8	8B	8A	8F	P7	7B	7A	7F	P6	6B	6A	6F

PIN	S0<82>	S0<83>	S0<84>	S0<85>	S0<86>	S0<87>	S0<88>	S0<89>	S0<90>	S0<91>	S0<92>	S0<93>	S0<94>	S0<95>	S0<96>	S0<97>	S0<98>	S0<99>	S0<100>	S0<101>	S0<102>
B0<0>	5D	5C	5G	5E	4D	4C	4G	4E	3D	3C	3G	3E	2D	2C	2G	2E	1D	1C	1G	1E	9A
B0<1>	P5	5B	5A	5F	P4	4B	4A	4F	P3	3B	3A	3F	P2	2B	2A	2F	P1	1B	1A	1F	S1

PIN	S0<103>	S0<104>	S0<105>	S0<106>	S0<107>	S0<108>	S0<109>	S0<110>	S0<111>	S0<112>	S0<113>	S0<114>	S0<115>	S0<116>	S0<117>	S0<118>	S0<119>	S0<120>	S0<121>	B0<0>	B0<1>
B0<0>	9F	9G	9B	S3	S2	11A	10F	10G	10B	11F	11G	11B	12F	12G	12B	12A	13F	13G	13B	B0<0>	--
B0<1>	9E	9D	9C	S5	S4	10A	10E	10D	10C	11E	11D	11C	12E	12D	12C	P9	13E	13D	13C	--	B0<1>

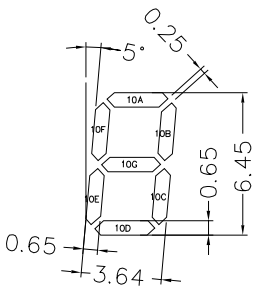

(10–17)
SCALE 2:1

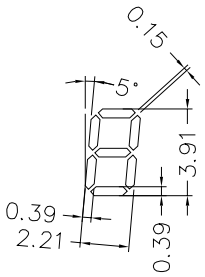

(1–9)
SCALE 2:1

RoHS/REACH COMPLIANT			YES		
UNMARKED TOLERANCE			±0.30		
SCALE	FIT	UNIT	mm		
SHEET	2 OF 2	REV.	A		
TITLE	LCM			NAME	DATE
PART NO.	/		DRAWN	Xia.Hong	DEC-19-2018
MODULE NO.	CGS164A00-THW-R		CHECKED	YanHui.Li	DEC-19-2018
CUSTOMER NO.	RFQ#031 FRUNZE 1/2		APPROVED	Bibo.Xiong	DEC-19-2018

秋田微电子 AVDISPLAY

THIS DRAWING IS PROPERTY OF AV-DISPLAY CO. LIMITED,IT CANNOT BE REPRODUCED WITHOUT PERMISSION.