REV.	SYMBOL	DESCRIPTION	NAME	DATE
0		FIRST ISSUE	XIA.HONG	MAY-02-2018
A	1	MODIFY LCD PIN INTERFACE AND IC LOGIC	XIA.HONG	MAY-17-2018

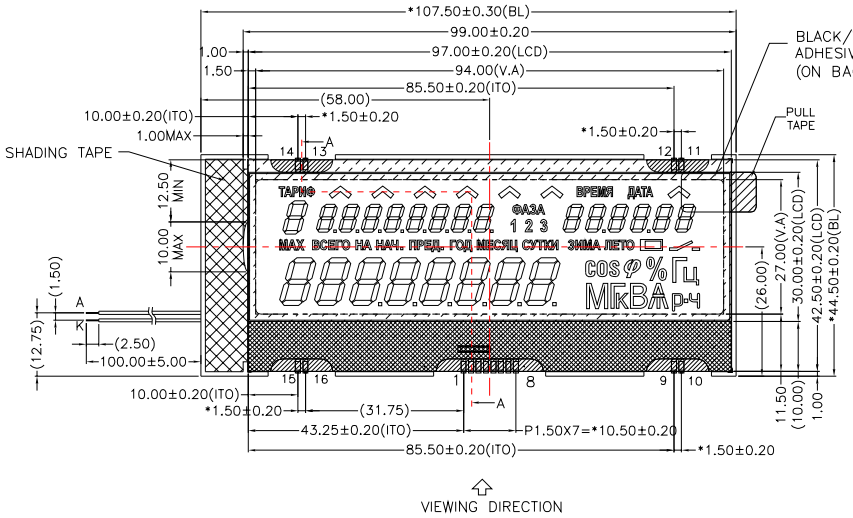

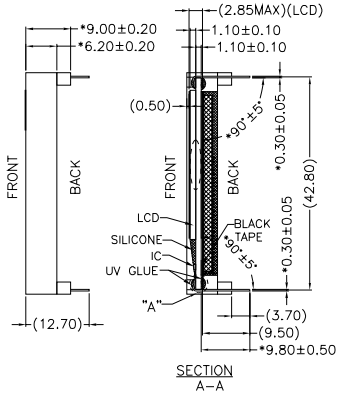

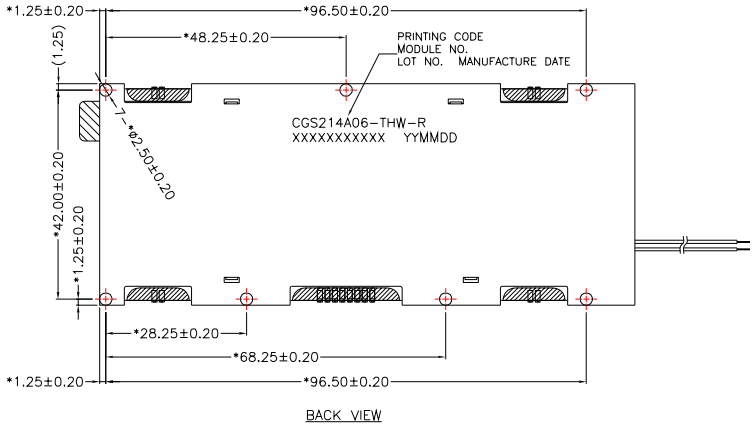

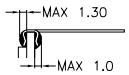

DETAIL "A"

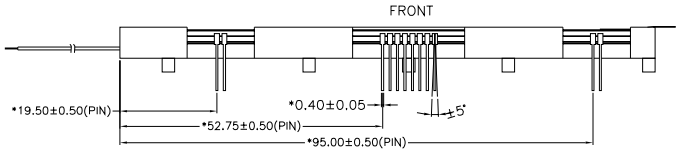

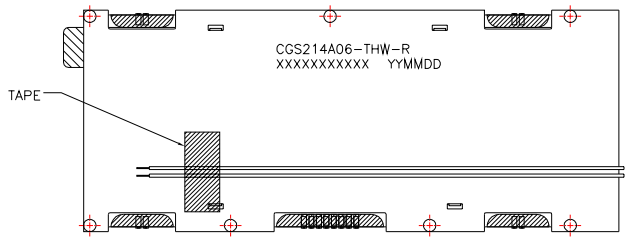

BENDING VIEW

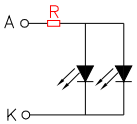

CONSTANT CURRENT:30mA,3.0±0.3V(REF)
BACKLIGHT DRIVER CIRCUIT DIAGRAM

LCD PIN INTERFACE 1

PIN	1	2	3	4	5	6	7	8	9-10	11	12	13	14	15-16
CONNECTOR	VLCD	VSS	NC	VDD	NC	NC	SCL	SDA	ESD	NC	NC	NC	NC	ESD

ITEM	PARAMETERS	ITEM	PARAMETERS
DISPLAY TYPE	TN,POSITIVE	VIEWING DIRECTION	6 O'CLOCK
DRIVING METHOD	1/2 DUTY,1/2 BIAS	OPERATING TEMPERATURE	-40°C TO +70°C
POLARIZER TYPE	TRANSFLECTIVE	STORAGE TEMPERATURE	-40°C TO +70°C
LCD OPERATING VOLTAGE	5.0V(REF.)	IC	UC1677c
LOGIC VOLTAGE(VDD)	3.3V	BACKLIGHT	EDGE,WHITE(2LEDS)
GRAY SCALE SUPPORT	NO	CONNECTOR	COG+PIN

MARK"*"ARE IMPORTANT DIMENSIONS,MARK"()"ARE REFERENCE DIMENSIONS,MARK"★"ARE SPECIAL CHARACTERISTICS RELATED TO SAFETY,MARK"☆" ARE SPECIAL CHARACTERISTICS IRRELEVANT TO SAFETY,MARK"●"ARE IMPROTANT CHARACTERISTICS EXCEPT FOR THE SPECIAL CHARACTERISTICS.

RoHS/REACH COMPLIANT			YES
UNMARKED TOLERANCE			±0.30
SCALE	FIT	UNIT	mm
SHEET	1 OF 2	REV.	A

秋田微电子 AVDISPLAY

TITLE	LCM		NAME	DATE
PART NO.	/	DRAWN	Xia.Hong	MAY-17-2018
MODULE NO.	CGS214A06-THW-R	CHECKED	YanHui.Li	MAY-17-2018
CUSTOMER NO.	RFQ#030	APPROVED	Bibo.Xiong	MAY-17-2018

THIS DRAWING IS PROPERTY OF AV-DISPLAY CO. LIMITED,IT CANNOT BE REPRODUCED WITHOUT PERMISSION.

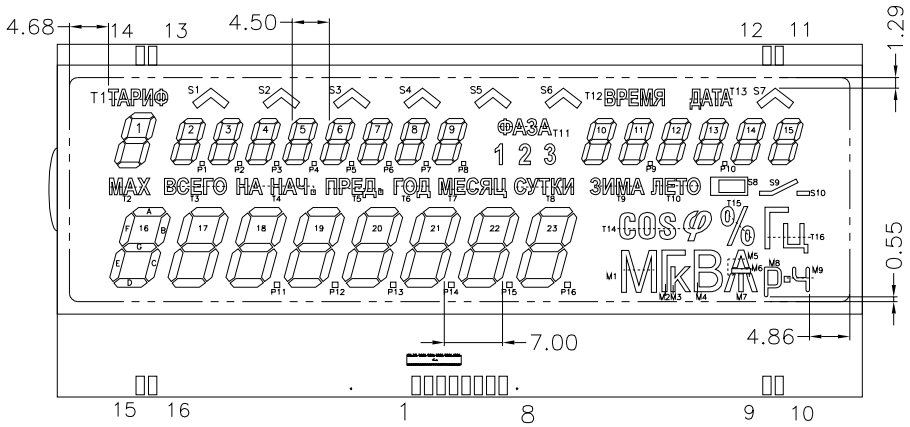

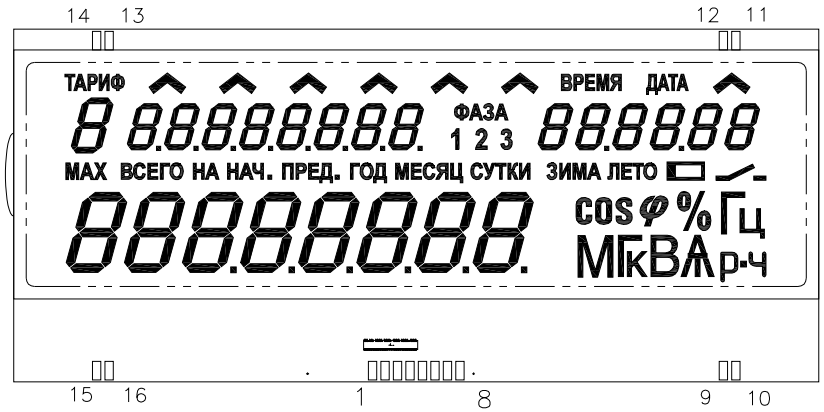

LCD DISPLAY EFFECT

PIN	SO(22)	SO(23)	SO(24)	SO(25)	SO(26)	SO(27)	SO(28)	SO(29)	SO(30)	SO(31)	SO(32)	SO(33)	SO(34)	SO(35)	SO(36)	SO(37)	SO(38)	SO(39)	SO(40)	SO(41)	SO(42)	SO(43)
BO(0)	8B	8A	8F	P6	7B	7A	7F	P5	6B	6A	6F	S2	P4	5B	5A	5F	P3	4B	4A	4F	P2	3B
BO(1)	8C	8G	8E	7D	7C	7G	7E	6D	6C	6G	6E	S3	5D	5C	5G	5E	4D	4C	4G	4E	3D	3C

PIN	SO(44)	SO(45)	SO(46)	SO(47)	SO(48)	SO(49)	SO(50)	SO(51)	SO(52)	SO(53)	SO(54)	SO(55)	SO(56)	SO(57)	SO(58)	SO(59)	SO(60)	SO(61)	SO(62)	SO(63)	SO(64)	SO(65)
BO(0)	3A	3F	T1	P1	2B	2A	2F	1B	1A	1F	T2	16E	16D	16C	17E	17D	17C	17A	T3	18E	18D	18C
BO(1)	3G	3E	S1	2D	2C	2G	2E	1C	1G	1E	1D	16F	16G	16B	17F	17G	17B	16A	T4	18F	18G	18B

PIN	SO(66)	SO(67)	SO(68)	SO(69)	SO(70)	SO(71)	SO(72)	SO(73)	SO(74)	SO(75)	SO(76)	SO(77)	SO(78)	SO(79)	SO(80)	SO(81)	SO(82)	SO(83)	SO(84)	SO(85)	SO(86)	SO(87)
BO(0)	P11	19E	19D	19C	P12	T5	20E	20D	20C	P13	21E	21D	21C	P14	22E	22D	22C	P15	T7	23E	23D	23C
BO(1)	18A	19F	19G	19B	19A	T6	20F	20G	20B	20A	21F	21G	21B	21A	22F	22G	22B	22A	T8	23F	23G	23B

PIN	SO(88)	SO(89)	SO(90)	SO(91)	SO(92)	SO(93)	SO(94)	SO(95)	SO(96)	SO(97)	SO(98)	SO(99)	SO(100)	SO(101)	SO(102)	SO(103)	SO(104)	SO(105)	SO(106)	SO(107)	SO(108)	SO(109)
BO(0)	P16	M1	M2	M3	M4	M7	M5	M6	M8	M9	15B	15A	15F	15D	14B	14A	14F	P10	13B	13A	13F	13D
BO(1)	23A	T9	T10	T14	S8	T15	S9		T16	S10	15C	15G	15E		14C	14G	14E	14D	13C	13G	13E	

PIN	SO(110)	SO(111)	SO(112)	SO(113)	SO(114)	SO(115)	SO(116)	SO(117)	SO(118)	SO(119)	SO(120)	SO(121)	SO(122)	SO(123)	SO(124)	SO(125)	SO(126)	SO(127)	SO(128)	SO(129)	SO(130)
BO(0)	S7	12B	12A	12F	P9	11B	11A	11F	10D	10B	10A	10F	T12	3	T11	P8	9B	9A	9F	P7	S5
BO(1)	T13	12C	12G	12E	12D	11C	11G	11E	11D	10C	10G	10E	S6	2	1	9D	9C	9G	9E	8D	S4

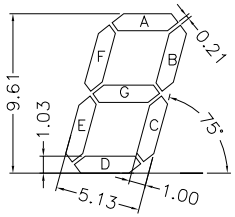

(16–23)
SCALE 2:1

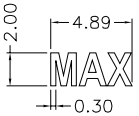

SCALE 2:1

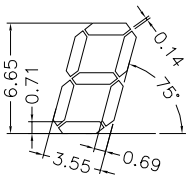

(1)
SCALE 2:1

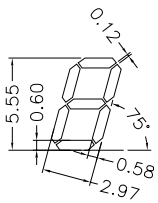

(2–15)
SCALE 2:1

RoHS/REACH COMPLIANT		YES	
UNMARKED TOLERANCE		±0.30	
SCALE	FIT	UNIT	mm
SHEET	2 OF 2	REV.	A

秋田微电子
AVDISPLAY

TITLE	LCM		NAME	DATE
PART NO.	/	DRAWN	Xia.Hong	MAY-17-2018
MODULE NO.	CGS214A06-THW-R	CHECKED	YanHui.Li	MAY-17-2018
CUSTOMER NO.	RFQ#030	APPROVED	Bibo.Xiong	MAY-17-2018

THIS DRAWING IS PROPERTY OF AV-DISPLAY CO. LIMITED,IT CANNOT BE REPRODUCED WITHOUT PERMISSION.