HIGH-VOLTAGE ANALOG-SIGNAL IC

UC1677

4BPx160SEG Dot Matrix LCD Controller/Driver

Ultrachip Confidential

Preliminary Specifications
Datasheet Revision: 0.1

IC Version: c_A
November 14, 2014

ULTRACHIP

The Coolest LCD Driver, Ever!!

Table of Content

INTRODUCTION 4
MAIN APPLICATIONS 4
FEATURE HIGHLIGHTS 4
ORDERING INFORMATION 5
BLOCK DIAGRAM 6
PIN DESCRIPTION 7
RECOMMENDED COG LAYOUT 9
COMMAND TABLE 10
COMMAND DESCRIPTION 11
(1) Mode Set 11
(2) Load data pointer MSB 11
(3) Load data pointer LSB 11
(4) Device Select 11
(5) Bank Select 11
(6) Blink Select 12
(7) FR Control 12
(8) Frequency Prescaler 1 12
(9) Frequency Prescaler 2 12
(10) Initialize 13
(11) Clock Out Ctrl 13
(12) Read Select 13
(13) Status Readout 13
(14) Clear Reset Flag 14
(15) Charge Pump Ctrl 14
(16) Set VLCD 14
(17) Display Mode 14
(18) Temperature Ctrl 15
(19) TC Slope Set 15
(20) TC Set 16
POWER MANAGEMENT 17
DISPLAY CONFIGURATION 21
LCD VOLTAGE 24
Oscillator 38
Oscillator – Internal Clock 38
Oscillator – External Clock 38
Timing and Frame Frequency 38
Display Register 38
Segment Outputs 38
Display RAM 38
Data Pointer 40

Ultrachip Confidential
Preliminary
Confidential

Sub-address Counter 40
Output bank selector 40
Input bank selector 40
Blinking 40
Characteristics of the I²C-bus 41
HOST INTERFACES 42
ABSOLUTE MAXIMUM RATING 49
DC CHARACTERISTICS 50
AC CHARACTERISTICS 58
PHYSICAL DIMENSIONS 61
ALIGNMENT MARK INFORMATION 62
PAD COORDINATES 63
TRAY INFORMATION 66

Ultrachip Confidential
Preliminary
Confidential

Ultrachip Confidential
Preliminary Confidential

UC1677

4BPx160SEG Dot Matrix LCD Controller/Driver

INTRODUCTION

The UC1677c is a fully featured Chip-On-Glass (COG) Liquid Crystal Display (LCD) driver, designed for high-contrast Vertical Alignment (VA) LCD with multiplex rates up to 1:4. It generates the drive signals for a static or multiplexed LCD containing up to 4 backplanes, 160 SEGs, and up to 640 elements. The UC1677c features an internal charge pump with internal capacitors for on-chip generation of the LCD driving voltage. To ensure an optimal and stable contrast over the full temperature range, the UC1677c offers a programmable temperature compensation of the LCD supply voltage. The UC1677c can be easily controlled by a microcontroller through either the two-line I^2C-bus or a four-line bidirectional SPI-bus.

MAIN APPLICATIONS

- Battery-operated hand-held devices
- Portable instruments

FEATURE HIGHLIGHTS

- Low power consumption
- Extended operating temperature range: –40°C to +85°C
- 160 segments and 4 backplanes allowing to drive:
  - up to 80 7-SEG numeric characters
  - up to 40 14-SEG alphanumeric characters
  - any graphics of up to 936 elements
- 640-bit RAM for display data storage
- Two sets of backplane outputs for optimal layout in COG configurations
- Up to 4 chips can be cascaded to drive larger displays
- Selectable backplane drive configuration: static, 2, 3, or 4 backplane multiplexing
- LCD supply voltage
  - Programmable internal charge pump for on-chip LCD voltage generation up to 8 x V_{DD2}
  - External LCD voltage supply possible as well
- Selectable 400 kHz I2C-bus or 6.5 MHz SPI-bus interface
- Selectable linear temperature compensation of V_{LCD}
- Selectable display bias configuration
- Wide range for digital and analog power supply: 2.5 V to 5.5 V
- Wide LCD voltage range from 4.0 V for low threshold LCDs up to 11.2 V for high threshold twisted nematic and Vertical Alignment (VA) displays
- Display memory bank switching in static, duplex, and quadruplex drive modes
- Programmable frame frequency in the range of 45 Hz to 300 Hz; factory calibrated with a tolerance of ±5 Hz (at 75 Hz)
- Diagnostic features for status monitoring
- Integrated temperature sensor with temperature readout
- On chip calibration of internal oscillator frequency and V_{LCD}

ORDERING INFORMATION

Part Number	I^2C	Package	Description
UC1677cGAA	Yes	COG	Gold bumped die.

Ultrachip Confidential
Preliminary
Confidential

General Notes

APPLICATION INFORMATION
For improved readability, the specification contains many application data points. When application information is given, it is advisory and does not form part of the specification for the device.

USE OF I^2C
The implementation of I^2C is already included and tested in all silicon.

BARE DIE DISCLAIMER
All die are tested and are guaranteed to comply with all data sheet limits up to the point of wafer sawing. There is no post waffle saw/pack testing performed on individual die. Although the latest modern processes are utilized for wafer sawing and die pick-&-place into waffle pack carriers, UltraChip has no control of third party procedures in the handling, packing or assembly of the die. Accordingly, it is the responsibility of the customer to test and qualify their application in which the die is to be used. UltraChip assumes no liability for device functionality or performance of the die or systems after handling, packing or assembly of the die.

LIFE SUPPORT APPLICATIONS
These devices are not designed for use in life support appliances, or systems where malfunction of these products can reasonably be expected to result in personal injuries. Customer using or selling these products for use in such applications do so at their own risk.

CONTENT DISCLAIMER
UltraChip believes the information contained in this document to be accurate and reliable. However, it is subject to change without notice. No responsibility is assumed by UltraChip for its use, nor for infringement of patents or other rights of third parties. No part of this publication may be reproduced, or transmitted in any form or by any means without the prior consent of UltraChip Inc. UltraChip's terms and conditions of sale apply at all times.

CONTACT DETAILS
UltraChip Inc. (Headquarter)
4F, No. 618, Recom Road,
Neihu District, Taipei 114,
Taiwan, R. O. C.

Tel: +886 (2) 8797-8947
Fax: +886 (2) 8797-8910
Sales e-mail: sales@ultrachip.com
Web site: http://www.ultrachip.com

BLOCK DIAGRAM

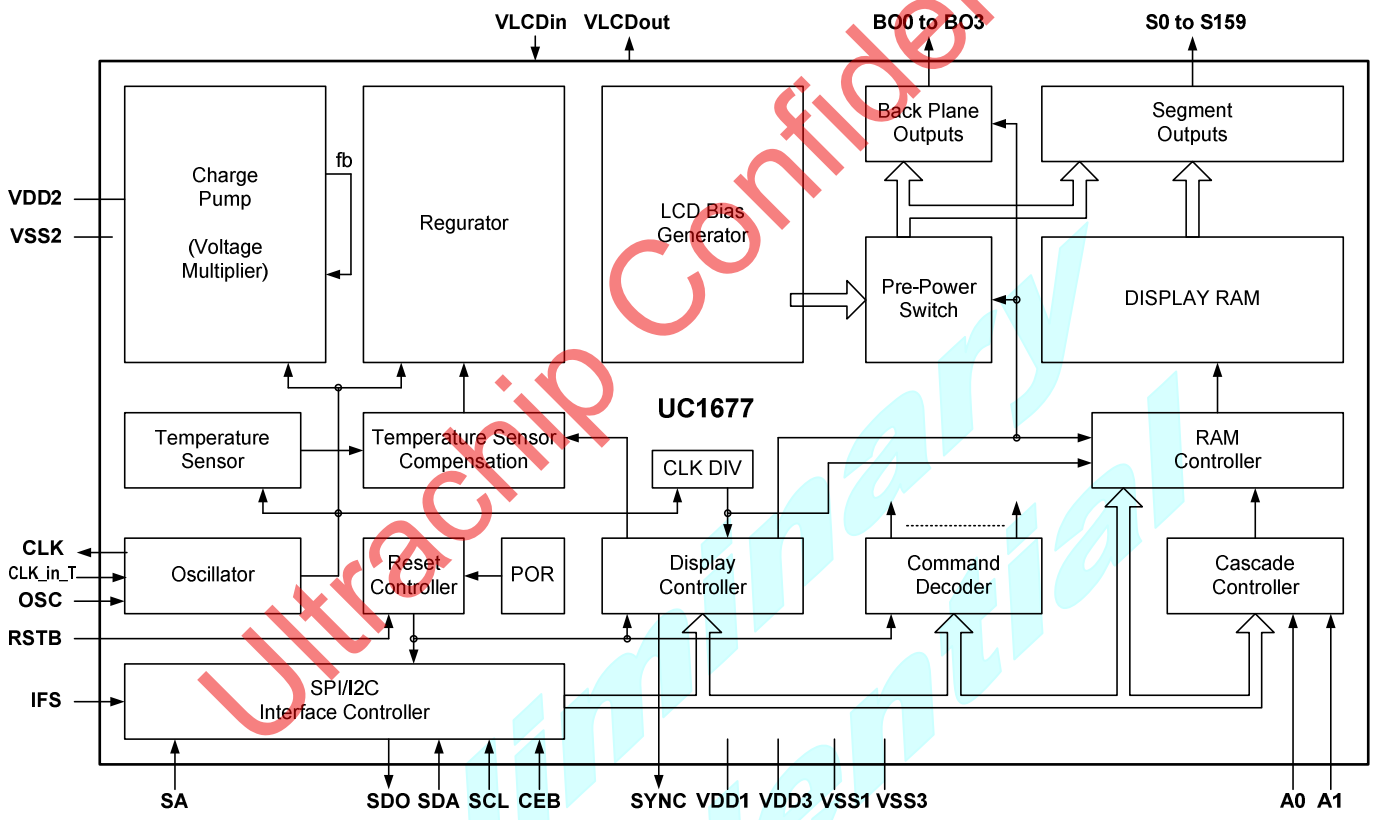

Ultrachip Confidential
Preliminary Confidential

Ultrachip Confidential
Preliminary
Confidential

PIN DESCRIPTION

Pin (Pad) Name	Count	Type	Description
SUPPLY PINS			
VDD1	4	PWR	Supply voltage 1 (analog and digital)
VDD2	8		Supply voltage 2 (charge pump)
VDD3	5		Supply voltage 3 (analog)
VSS1 [1] VSS2 [1] VSS3 [1]	6 10 7	GND	Ground.
VLCD PINS			
VLCD_out	5	O	VLCD Output. Internal oscillator Output.
VLCD_in	5	I	VLCD Input. External oscillator Input.
OSCILLATOR, SYNCHRONIZATION, AND RESET PINS			
CLK	1	O	Internal oscillator Output.
CLK_in_T	1	I	External sscillator Input.
SCL	3	I	Serial clock input.
OSC [2]	1	I	Clock internal/external selector.
SYNC [3]	1	I/O	Synchronization signals for cascaded devices.
$\overline{RST}$	1	I	Active-LOW Reset pin.
OUTPUT PINS			
COM3~COM0 (BO<3>~<0>)	2x4	O	LCD backplane.
S160~S0 (SO<159> ~ <0>)	1x160	O	LCD Segment.
TEST PINS			
T1~3	1x3	I	Test input pins for UltraChip's use only. Must be connected it to VDD1.
T4~8	1x5	O	Test output pins for UltraChip's use only. Leave it OPEN.
T9, T10	1, 1		
INTERFACE PINS			
A1, A0	1, 1	I	Hardware device address selection for cascading. Connect to Vss1 for logic 0. Connect to Vdd1 for logic 1.
ANA_T (ANA_TO)	1		Test Pin.
IFS	1	I	Interface selector input. For SPI, connect to Vss1. For I^2C, connect to Vdd1.
SA	1	I	For SPI, not used, connect to Vss1. For I^2C, slave address selector. Connect to Vss1 for logic 0. Connect to Vdd1 for logic 1.

Pin (Pad) Name	Count	Type	Description
$\overline{CS}$ (CEB)	1	I	For SPI, chip enable input (active LOW). For I^2C, unused. Connect to Vdd1.
SDA	3	I	SPI-bus/ I^2C-bus serial data input.
SDO	3	O	SPI-bus/ I^2C-bus serial data output.
Dummy	4		Dummy pins. Not Connected.

Note: [1] The substrate (rear side of the die) is wired to Vss but should not be electrically contracted.
[2] If pin OSC is tied to Vss1, CLK is the output pin of the internal oscillator.
If pin OSC is tied to VDD1, CLK is the input pin of the external oscillator.
[3] If cascading is not used, pins must be left floating.

Ultrachip Confidential
Preliminary Confidential

Ultrachip Confidential
Preliminary
Confidential

RECOMMENDED COG LAYOUT

(TBD)

NOTES FOR V_{DD} WITH COG:

The operation condition, V_{DD}=2.5V (min.), should be satisfied under all operating conditions. UC1677c's peak current (I_{DD}) can be up to ~15mA during high speed data-write to UC1677c's on-chip SRAM. Such high pulsing current mandates very careful design of V_{DD} and V_{SS} ITO trances in COG modules. When V_{DD} and V_{SS} trace resistance is not low enough, the pulsing I_{DD} current can cause the actual on-chip V_{DD} to drop to below 2.5V and cause the IC to malfunction.

COMMAND TABLE

R/W : 0: Write 1: Read C/D : 0: Command 1: Data – : Don't care

#	Command Name	W/R	C/D	D7	D6	D5	D4	D3	D2	D1	D0	Action	Default
1.	Mode Set	0	0	1	1	0	0	E	B	M[1:0]		Set Display Mode	C0H
2.	Load Data Pointer MSB	0	0	0	0	0	0	P[7:4]				Load data pointer	00H
3.	Load Data Pointer LSB	0	0	0	1	0	0	P[3:0]					40H
4.	Device Select	0	0	1	1	1	0	0	0	A[1:0]		Select Device	E0H
5.	Bank Select	0	0	1	1	1	1	1	0	I	O	Select Bank	F8H
6.	Blink Select	0	0	1	1	1	1	0	AB	BF[1:0]		Select Blink	F0H
7.	FR Control	0	0	0	0	0	1	0	0	0	FR[0]	Select Frame Rate	10H
8.	Frequency Prescaler 1	0	0	1	1	1	0	1	F[2:0]			Set Frame rate1	EBH
9.	Frequency Prescaler 2	0	0	0	0	1	FF[4:0]					Set Frame rate2	26H
10.	Initialize	0	0	0	0	0	1	0	0	1	0	Initialize	--
11.	Clock Out Ctrl	0	0	1	1	0	1	0	1	0	COE	Control CLK out	D4H
12.	Read Select	0	0	0	0	0	1	1	1	0	SO	Read Select	1CH
13.	Status Readout (double-byte command)	1	-	TD[7:0]								Read Status	--
		1	-	SR[7:2]						SA1	SA0		--
14.	Clear Reset Flag	0	0	0	0	0	1	1	1	1	1	Set Clear reset	1FH
15.	Charge Pump Ctrl	0	0	1	0	1	1	CPE	CPC[2:0]			Set Charge Pump	60H
16.	Set VLCD (double-byte command)	0	0	1	0	1	0	1	0	0	0	Set VLCD	A8H
				V[7:0]									60H
17.	Display Mode	0	0	0	0	0	1	0	1	APO	PXV	All Pixel ON / OFF	14H
18.	Temperature Ctrl	0	0	0	1	0	1	0	TCE	TMF	TME	Control Temp.	50H
19.	TC Slope Set TSA	0	0	0	1	0	1	1	TSA[2:0]			Set TC Slope	58H
	TC Slope Set TSB	0	0	0	1	1	0	0	TSB[2:0]				60H
	TC Slope Set TSC	0	0	0	1	1	0	1	TSC[2:0]				68H
	TC Slope Set TSD	0	0	0	1	1	1	0	TSD[2:0]				70H
	TC Slope Set TSE	0	0	0	1	1	1	1	TSE[2:0]				78H
	TC Slope Set TSF	0	0	1	0	0	0	0	TSF[2:0]				80H
20.	TC Set T1T	0	0	1	0	0	0	1	T1T[2:0]			Set Temp. Compensation	88H
	TC Set T2T	0	0	1	0	0	1	0	T2T[2:0]				90H
	TC Set T3T	0	0	1	0	0	1	1	T3T[2:0]				98H
	TC Set T4T	0	0	1	0	1	0	0	T4T[2:0]				A0H

Ultrachip Confidential
Preliminary
Confidential

Ultrachip Confidential
Preliminary Confidential

COMMAND DESCRIPTION

R/W : 0: Write 1: Read C/D : 0: Command 1: Data – : Don't care

(1) Mode Set

Action	R/W	C/D	D7	D6	D5	D4	D3	D2	D1	D0	
Set Mode	0	0	**1**	**1**	**0**	**0**	E	B	M1	M0	C0h

The Set Mux Mode command allows setting the frame/ line inversion select.

E: Display Status **0: Disabled (Blank)** 1: Enabled

The possibility to disable the display allows implementation of blinking under external control; the enable bit determines also whether the internal clock signal is available at the CLK pin

B: LCD Bias configuration **0: 1/3 bias** 1: 1/2 bias

M[2:0]: LCD drive mode selection

00b: 1:4 multiplex; BP0, BP1, PB2, BP3 (default)

01b: static; BP0

10b: 1:2 multiplex; BP0, BP1

11b: 1:3 multiplex; BP0, BP1, BP2

(2) Load data pointer MSB

Action	R/W	C/D	D7	D6	D5	D4	D3	D2	D1	D0	
Load data pointer - MSB	0	0	**0**	**0**	**0**	**0**	P7	P6	P5	P4	00h

(3) Load data pointer LSB

Action	R/W	C/D	D7	D6	D5	D4	D3	D2	D1	D0	
Load data pointer - LSB	0	0	**0**	**1**	**0**	**0**	P3	P2	P1	P0	40h

P[7:4]: Most Significant Bits (Leftmost 4 bits) of the data pointer that indicates one of the 160 display RAM addresses.
Default:0000b

P[3:0]: Least Significant Bits (Rightmost 4 bits) of the data pointer that indicates one of the 160 display RAM addresses.
Default:0000b

(4) Device Select

Action	R/W	C/D	D7	D6	D5	D4	D3	D2	D1	D0	
Select device	0	0	**1**	**1**	**1**	**0**	**0**	**0**	A1	A0	E0h

A[1:0]: These 2 bits of immediate data are transferred to the subaddress counter to define one of four hardware subaddresses. **(Default:00b)**

(5) Bank Select

Action	R/W	C/D	D7	D6	D5	D4	D3	D2	D1	D0	
Clear Reset Flag	0	0	**1**	**1**	**1**	**0**	**1**	**0**	I	O	E8h

I: Input bank selection

O: Output bank selection.

	Static	1:2 multiplex	1:3	1:4
I	Input bank selection	Storage of arriving display data	Remark: The bank select command has no effect in 1:3 and 1:4 multiplex drive modes.	
0	**RAM bit 0**	**RAM bits 0 and 1**		
1	RAM bit 2	RAM bits 2 and 3		
O	Output bank selection	Retrieval of LCD display data		
0	RAM bit 0	RAM bits 0 and 1		
1	RAM bit 2	RAM bits 2 and 3		

R/W : 0: Write 1: Read C/D : 0: Command 1: Data – : Don't care

(6) Blink Select

Action	R/W	C/D	D7	D6	D5	D4	D3	D2	D1	D0	
Select Blink	0	0	**1**	**1**	**1**	**1**	**0**	AB	BF1	BF0	F0h

AB: Blink mode selection

0: normal blinking. Normal blinking is assumed when the LCD multiplex drive modes 1:3 or 1:4 are selected.

1: alternate RAM bank blinking. Alternate RAM bank blinking does not apply in 1:3 and 1:4 multiplex drive modes.

BF[1:0]: Blink Frequency selection

00b: OFF 01b: 1 10b: 2 11b: 3

(7) FR Control

Action	R/W	C/D	D7	D6	D5	D4	D3	D2	D1	D0	
Select Frame Rate	0	0	**0**	**0**	**0**	**1**	**0**	**0**	**0**	FR0	10h

FR[0]: **0: Use Frequency Prescaler 1**

1: Use Frequency Prescaler 2

(8) Frequency Prescaler 1

Action	R/W	C/D	D7	D6	D5	D4	D3	D2	D1	D0	
Set Frame Rate 1	0	0	**1**	**1**	**1**	**0**	**1**	F2	F1	F0	EBh

F[2:0]: This register defines the devision factor for the the frame frequency f fr

F[2:0]	Freq. *	Equation
000b	60Hz	f fr = (64/80) x (fclk/24)
001b	65Hz	f fr = (64/74) x (fclk/24)
010b	70Hz	f fr = (64/68) x (fclk/24)
011b	**75Hz**	f fr = (64/64) x (fclk/24)

F[2:0]	Freq. *	Equation
100b	80Hz	f fr = (64/60) x (fclk/24)
101b	85Hz	f fr = (64/56) x (fclk/24)
110b	90Hz	f fr = (64/53) x (fclk/24)
111b	75Hz	f fr = (fclk/24)

* **Freq:** Nominal frame frequency calculated for an internal operating frequency of 1.800 kHz.

(9) Frequency Prescaler 2

Action	R/W	C/D	D7	D6	D5	D4	D3	D2	D1	D0	
Set Frame Rate 2	0	0	**0**	**0**	**1**	**FF4**	**FF3**	**FF2**	**FF1**	**FF0**	26h

FF[4:0]: This register defines the devision factor for the the frame frequency f fr

FF[4:0]	Freq. *	Equation
0 0000	45	f fr = (64/107) x (fclk/24)
0 0001	50	f fr= (64/96) x (fclk/24)
0 0010	55	f fr= (64/87) x (fclk/24)
0 0011	60	f fr = (64/80) x (fclk/24)
0 0100	65	f fr = (64/74) x (fclk/24)
0 0101	70	f fr = (64/68) x (fclk/24)
0 0110	75	f fr = (64/64) x (fclk/24)
0 0111	80	f fr = (64/60) x (fclk/24)
0 1000	85	f fr = (64/56) x (fclk/24)
0 1001	90	f fr = (64/53) x (fclk/24)
0 1010	95	f fr = (64/51) x (fclk/24)
0 1011	100	f fr = (64/48) x (fclk/24)
0 1100	110	f fr = (64/44) x (fclk/24)
0 1101	120	f fr = (64/40) x (fclk/24)
0 1110	130	f fr = (64/37) x (fclk/24)
0 1111	140	f fr = (64/34) x (fclk/24)

FF[4:0]	Freq. *	Equation
1 0000	150	f fr = (64/32) x (fclk/24)
1 0001	160	f fr = (64/30) x (fclk/24)
1 0010	170	f fr = (64/28) x (fclk/24)
1 0011	180	f fr = (64/27) x (fclk/24)
1 0100	190	f fr = (64/25) x (fclk/24)
1 0101	200	f fr = (64/24) x (fclk/24)
1 0110	210	f fr = (64/23) x (fclk/24)
1 0111	220	f fr = (64/22) x (fclk/24)
1 1000	230	f fr = (64/21) x (fclk/24)
1 1001	240	f fr = (64/20) x (fclk/24)
1 1010	250	f fr = (64/19) x (fclk/24)
1 1011	260	f fr = (64/18) x (fclk/24)
1 1100	270	f fr = (64/18) x (fclk/24)
1 1101	280	f fr = (64/17) x (fclk/24)
1 1110	290	f fr = (64/17) x (fclk/24)
1 1111	300	f fr = (64/16) x (fclk/24)

Ultrachip Confidential
Preliminary Confidential

R/W : 0: Write 1: Read C/D : 0: Command 1: Data – : Don't care

(10) Initialize

Action	R/W	C/D	D7	D6	D5	D4	D3	D2	D1	D0	
Initialize	0	0	**0**	**0**	**1**	**1**	**1**	**0**	**1**	**0**	3Ah

This command generates a chip-wide reset by setting all commands to their default values.

(11) Clock Out Ctrl

Action	R/W	C/D	D7	D6	D5	D4	D3	D2	D1	D0	
Switch CLK pin I/O	0	0	**1**	**1**	**0**	**1**	**0**	**1**	**0**	COE	D4h

When the CLK pin is configured as an output pin, the "Clock out ctrl" command enables or disables the clock output on pin CLK.

COE: Clock Out Enable.

0: Clock signal not available on pin CLK; pin CLK is in 3-state.

1: clock signal available on pin CLK.

(12) Read Select

Action	R/W	C/D	D7	D6	D5	D4	D3	D2	D1	D0	
Select readout	0	0	**0**	**0**	**0**	**1**	**1**	**1**	**0**	SO	1Ch

The "Read select" command allows choosing to readout the temperature or the device status.

SO: Readout

0: temperature; the Status-readout command would readout the temperature, TD[7:0].

1: device status; the Status-readout command would readout some information about the status of the device.

(13) Status Readout

Action	R/W	C/D	D7	D6	D5	D4	D3	D2	D1	D0	
Read Temperature or Statuses	1	-	TD7 / SR7	TD6 / SR6	TD5 / SR5	TD4 / SR4	TD3 / SR3	TD2 / SR2	TD1 / SR1 / SA1	TD0 / SR0 / SA0	FFh

If SO=0, this command would read out temperature,

TD[7:0]: ranging from 00h~FFh

If SO=1, this command would read out statuses.

SR7: Display status. **0: Display is disabled** 1: Display is enabled

SR6: Charge pump switching stauts. **0: Charge pump is disabled** 1: Charge pump is enabled

SR5: Charge pump charging stauts. **0: NOT reached programmed value** 1: Reached programmed value

SR4: Reset status flag.

0: no reset has occurred since the reset status flag was cleared last time

1: reset has occurred since the reset status flag was cleared last time

The flag is set whenever a reset occurs, induced by RST pin, Power-On Reset (POR), or Initialize command. After power-on, the flag is set and should be cleared for reset monitoring.

SR[3:0]: EMC detection.

01--b (0 1 SA1 SA0): pre-defined code for EMC detection when I^2C interface is used

0101b: pre-defined code for EMC detection when SPI interface is used

SA[1:0]: Some bits of the Status-readout command have a certain probability of being changed by an EMC/ESD events. For example, an EMC/ESD event can cause a change of the hard-wired settings of SA1 or SA0. Therefore SR[3:0] can help to detect if an EMC/ESD event has occurred which has caused the change of a bit. In environments where EMC/ESD events may occur, it could be helpful to compare the result of the Status-readout command with the initial bit settings periodically.

Ultrachip Confidential
Preliminary Confidential

R/W : 0: Write 1: Read C/D : 0: Command 1: Data – : Don't care

(14) Clear Reset Flag

Action	R/W	C/D	D7	D6	D5	D4	D3	D2	D1	D0	
Reset the Reset Flag	0	0	**0**	**0**	**0**	**1**	**1**	**1**	**1**	**1**	1Fh

The Clear-reset-flag command clears the reset flag SR4.

(15) Charge Pump Ctrl

Action	R/W	C/D	D7	D6	D5	D4	D3	D2	D1	D0	
Set Charge Pump	0	0	**1**	**0**	**1**	**1**	CPE	CPC2	CPC1	CPC0	60h

The Charge Pump Control command enables or disables the internal VLCD generation and controls the charge pump voltage multiplier settings.

CPE: Charge pump Status.

0: Charge pump Disabled; (Using External supply of VLCD; no internal VLCD generation.)

1: Charge pump Enabled; (Using Internal VLCD generation; no external supply of VLCD.)

CPC[2:0]: Charge pump voltage multiplier setting.

000b: V_{LCD} = 2 x V_{DD}2 (Default) 001b: V_{LCD} = 3 x V_{DD}2 010b: V_{LCD} = 4 x V_{DD}2 011b: V_{LCD} = 5 x V_{DD}2

100b: V_{LCD}=V_{DD}x6 101b: V_{LCD}=V_{DD}x7 110b: V_{LCD}=V_{DD}x8 111b: V_{LCD}=V_{DD}2 (direct mode)

(16) Set V_{LCD}

Action	R/W	C/D	D7	D6	D5	D4	D3	D2	D1	D0	
Set V_{LCD}	0	0	**1**	**0**	**1**	**0**	**1**	**0**	**0**	**0**	A8h
(Double-byte command)	0	0	**V7**	**V6**	**V5**	**V4**	**V3**	**V2**	**V1**	**V0**	60h

The "Set V_{LCD}" command sets the LCD voltage.

V[7:0]: Set V_{LCD}, ranging from 0 to 240. **(Default: 60h)**

V[7:0]	VLCD
00h	4V
01h	4.03V
02h	4.06V
03h	4.09V
:	:
60h (Default)	
:	:
F0h	11.2V
(others)	11.2V

(17) Display Mode

Action	R/W	C/D	D7	D6	D5	D4	D3	D2	D1	D0	
Set All-pixel-ON / -OFF	0	0	**0**	**0**	**0**	**1**	**0**	**1**	APO	PXV	14h

This command is used to enter All-pixel-ON and inverse display mode. This command will not change any status or memory data.

APO: All Pixel On Control **0: All Pixel On disable (Default)** 1: All Pixel On enable

PXV: Pixel Inverse Control **0: Pixel Inverse disable (Default)** 1: Pixel Inverse enable

Ultrachip Confidential
Preliminary Confidential

R/W : 0: Write 1: Read C/D : 0: Command 1: Data – : Don't care

(18) Temperature Ctrl

Action	R/W	C/D	D7	D6	D5	D4	D3	D2	D1	D0	
Control Temperature	0	0	**0**	**1**	**0**	**1**	**0**	TCE	TMF	TME	50h

The Temperature-ctrl command enables or disables the temperature measurement block and the temperature compensation of VLCD.

TCE: Temperature compensation control

0: temperature compensation of VLCD disabled

1: temperature compensation of VLCD enabled

TMF: Temperature measurement filter

0: digital temperature filter disabled

1: digital temperature filter enabled

The unfiltered digital value of TD[7:0] is immediately available for the readout and VLCD compensation.

TME: Temperature measurement control

0: temperature measurement disabled; no temperature readout possible

1: temperature measurement enabled; temperature readout possible

(19) TC Slope Set

Action	R/W	C/D	D7	D6	D5	D4	D3	D2	D1	D0	
Set TC Slope, TSA	0	0	**0**	**1**	**0**	**1**	**1**	TSA2	TSA1	TSA0	58h
Set TC Slope, TSB	0	0	**0**	**1**	**1**	**0**	**0**	TSB2	TSB1	TSB0	60h
Set TC Slope, TSC	0	0	**0**	**1**	**1**	**0**	**1**	TSC2	TSC1	TSC0	68h
Set TC Slope, TSD	0	0	**0**	**1**	**1**	**1**	**0**	TSD2	TSD1	TSD0	70h
Set TC Slope, TSE	0	0	**0**	**1**	**1**	**1**	**1**	TSE2	TSE1	TSE0	78h
Set TC Slope, TSF	0	0	**1**	**0**	**0**	**0**	**0**	TSF2	TSF1	TSF0	80h

The TC Slope command allows setting the temperature coefficients of V_{LCD} corresponding to six temperature intervals defined by the TC Set command.

TSA[2:0]~TSF[2:0]:

TSA~TSF	Slope factor (mV/°C)	Temperature coefficients SA to SF	Remark
000b	0	0.000	The relationship between the temperature coefficients SA to SF and the slope factor is derived from the following equation: $Sn=\frac{0.6275(^{o}C)}{LSB_of_V[7:0](mV)}$ where LSB of V[7:0] ≅ 30 mV.
001	-6	-0.125	
010	-12	-0.250	
011	-24	-0.500	
100	-60	-1.250	
101	+6	+0.125	
110	+12	+0.250	
111	+24	+0.500	

Ultrachip Confidential
Pre-Preliminary Confidential

R/W : 0: Write 1: Read C/D : 0: Command 1: Data – : Don't care

(20) TC Set

Action	R/W	C/D	D7	D6	D5	D4	D3	D2	D1	D0	
Set TC, T1T	0	0	**1**	**0**	**0**	**0**	**1**	TT1T2	T1T1	T1T0	88h
Set TC, T2T	0	0	**1**	**0**	**0**	**1**	**0**	T2T2	T2T1	T2T0	90h
Set TC, T3T	0	0	**1**	**0**	**0**	**1**	**1**	T3T2	T3T1	T3T0	98h
Set TC, T4T	0	0	**1**	**0**	**1**	**0**	**0**	T4T2	T4T1	T4T0	a0h

The TC set command allows defining six temperature intervals in the operating temperature range from -40 ^{o}C to +85 ^{o}C. For each of the temperature intervals, the TC-slope command allows setting the temperature coefficient of VLCD.

For this command, the register selection bits have to be set RS[1:0] = 10b.

T1T[2:0]~T4T[2:0]:

T1T~T4T	Temperature region 1 and 2		Temperature region 3 and 4		Remark
	T1, T2 (^{o}C)	TD	T3, T4 (^{o}C)	TD	
000b	**-34**	**10**	**+29**	**110**	The relation between the actual temperature and TD[7:0] is derived from: T (^{o}C)= 0.6275 x TD[7:0] - 40
001	-27	20	+38	124	
010	-21	30	+47	138	
011	-15	40	+55	152	
100	-9	50	+64	166	
101	-2	60	+73	180	
110	+4	70	+82	194	
111	+10	80	+85	200	

Ultrachip Confidential
Preliminary Confidential

Ultrachip Confidential
Preliminary Confidential

POWER MANAGEMENT

POWER-ON RESET (POR)

At power-ON, the UC1677 resets to the following starting conditions:

1. All backplane and segment outputs are set to V_{LCD}.
2. Selected drive mode is: 1:4 with 1/3 bias.
3. Input and output bank selectors are reset.
4. The interface is initialized.
5. The data pointer and the subaddress counter are cleared (set to logical 0).
6. The internal oscillator is disabled.
   If interla oscillator is selected, (pin OSC is connected to Vss,) there will be no clock signal on pin CLK.
7. Temperature measurement is disabled.
8. Temperature filter is disabled.
9. The internal VLCD voltage generation is disabled. The charge pump is switched off.
10. The VLCD temperature compensation is disabled.
11. The display is disabled.
12. Blinking is switched OFF.

Remark:

1. Do not transfer data for at least 1 mS after a power-on to allow the reset action to complete.
2. The first command sent to the device after the power-on event must be the Initialize command.
3. After Power-On Reset (POR) and before enabling the display, the RAM content should be brought to a defined status
   - by clearing it (setting it all logic 0) or
   - by writing meaningful content (for example, a graphic)

   otherwise unwanted display artifacts may appear on the display.

RESET PIN FUNCTION

The reset pin of the UC1677 resets all the registers to their default state. The RAM contents remain unchanged. After the reset signal is removed, the UC1677 will behave in the same manner as at POR.

RECOMMENDED START-UP SEQUENCES

This section describes how to proceed with the initialization of the chip in different application modes.

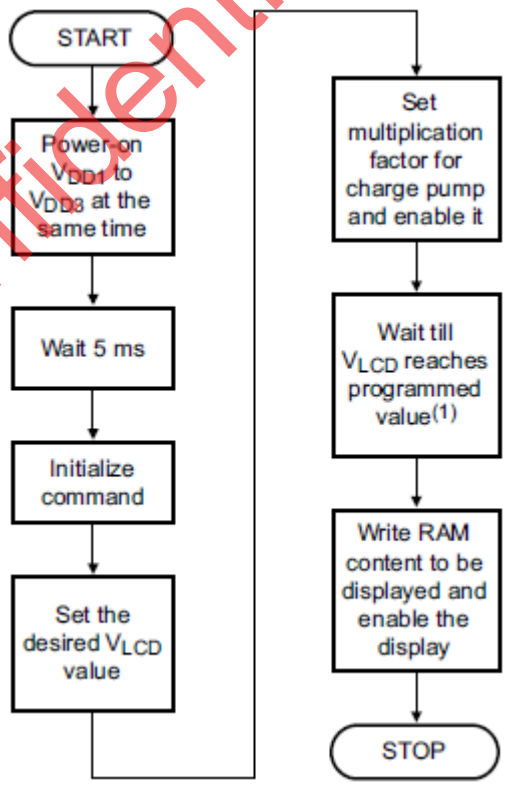

Note: (1) This time depends on the external capacitor on the VLCD pins. For a capacitor of 100 nF a delay of about 55 mS to 65 mS is expected.

Figure 1. Recommended start-up sequence when using the internal charge pump and the internal clock signal

When using the internal VLCD generation, the display must not be enabled before the generation of VLCD with the internal charge pump is completed. Otherwise unwanted display artifacts may appear on the display.

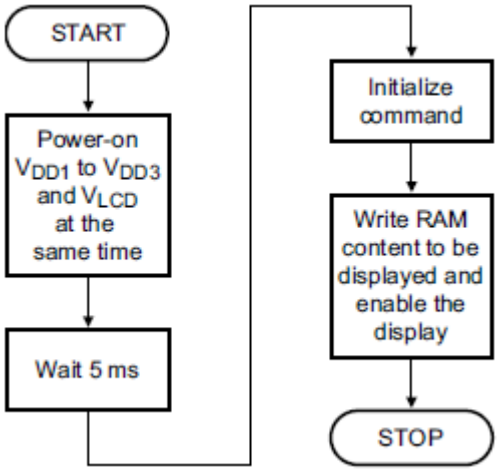

Figure 2. Recommended start-up sequence when using an external supplied VLCD and the internal clock signal

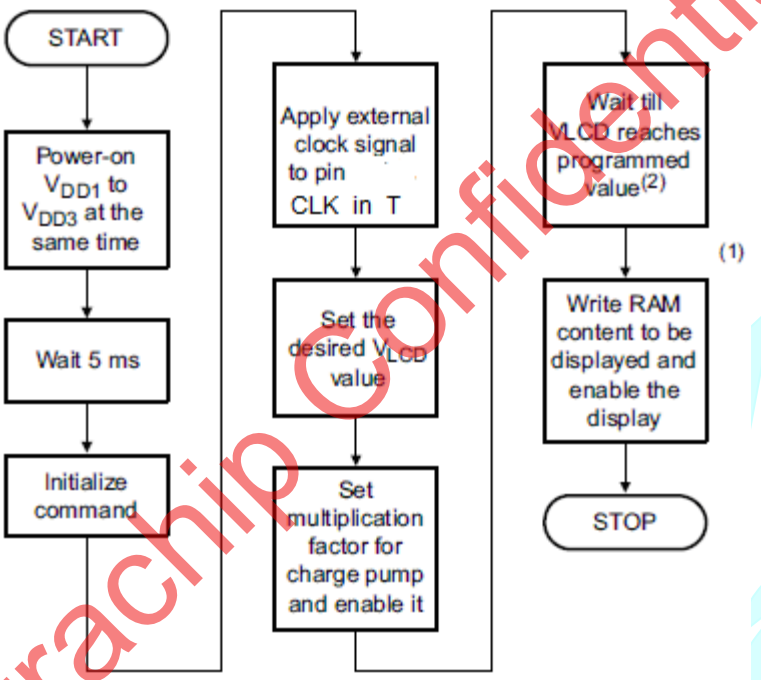

(1) Alternatively, the external clock signal can be applied after the generation of the VLCD voltage.

(2) This time depends on the external capacitor on the VLCD pins. For a capacitor of 100 nF a delay of about 55 mS to 65 mS is expected.

Figure 3. Recommended start-up sequence when using the internal charge pump and an external clock signal

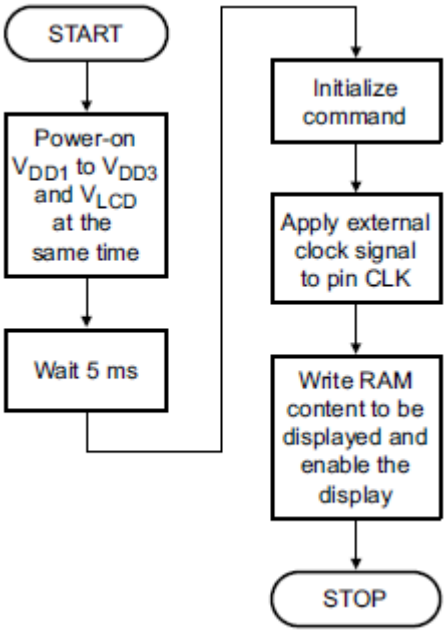

Figure 4. Recommended start-up sequence when using an external supplied VLCD and an external clock signal

Ultrachip Confidential
Preliminary Confidential

Ultrachip Confidential

RECOMMENDED POWER-DOWN SEQUENCES

With the following sequences, the UC1677 can be set to a state of minimum power consumption, called power-down mode.

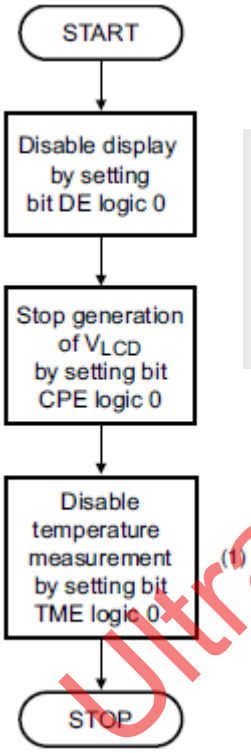

Note: (1) If previously enabled.

Remark: When bits DE, CPE, and TME are logic 0, the internal clock signal is switched off.

Figure 5. Recommended power-down sequence for minimum power-down current when using the internal charge pump and the internal clock signal

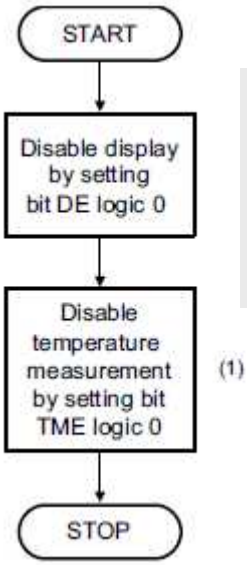

Note: (1) If previously enabled.

Remark: When bits DE , CPE and TME are logic 0, the internal clock signal is switched off.

Figure 6. Recommended power-down sequence when using an external supplied VLCD and the internal clock signal

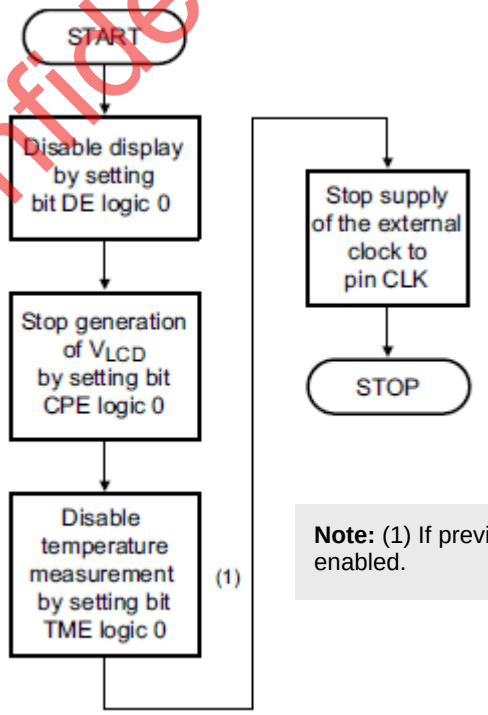

Note: (1) If previously enabled.

Figure 7. Recommended power-down sequence when using the internal charge pump and an external clock signal

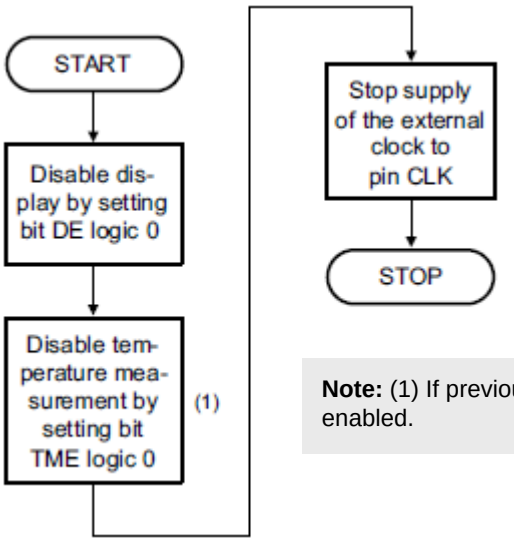

Note: (1) If previously enabled.

Figure 8. Recommended power-down sequence when using an external supplied VLCD and an external clock signal

Remarks:

1. It is necessary to run the power-down sequence before removing the supplies. Depending on the application, care must be taken that no other signals are present at the chip input or output pins when removing the supplies. Otherwise this may cause unwanted display artifacts. Uncontrolled removal of supply voltages will not damage the UC1677.
2. Static voltages across the liquid crystal display can build up when the external LCD supply voltage (VLCD) is on while the IC supply voltage (VDD1 to VDD3) is off, or the other way round. This may cause unwanted display artifacts. To avoid such artifacts, external VLCD, VDD1 to VDD3 must be applied or removed together.
3. A clock signal must always be supplied to the device when the device is active. Removing the clock may freeze the LCD in a DC state, which is not suitable for the liquid crystal. It is recommended to disable the display first and to remove the clock signal afterwards.

Ultrachip Confidential
Preliminary
Confidential

DISPLAY CONFIGURATION

The possible display configurations with the UC1677 depend on the number of active backplanes outputs required. A selection of possible display configurations is given in the table below.

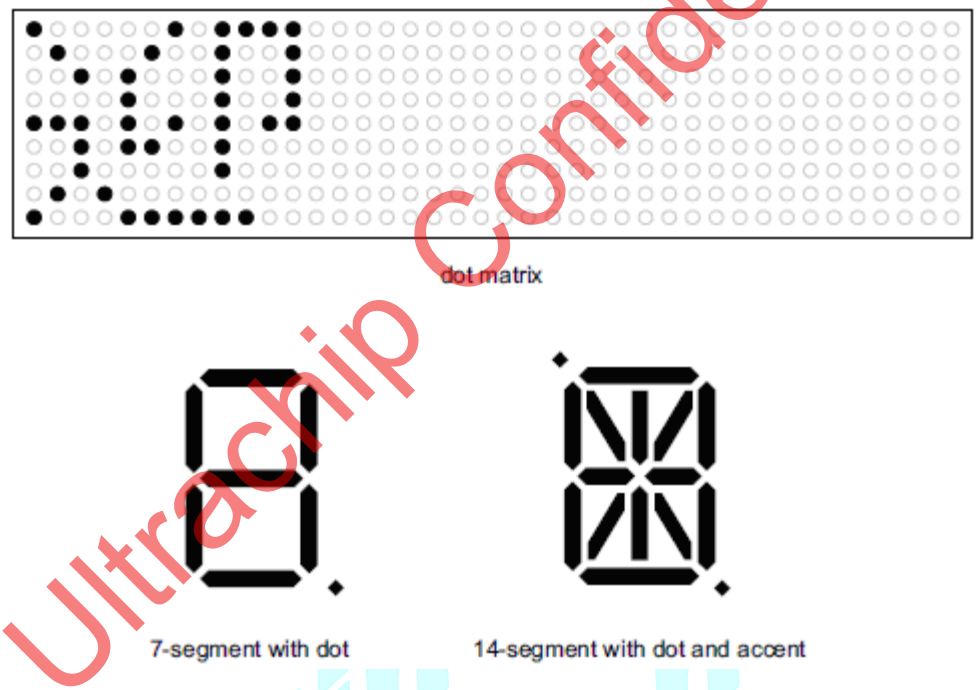

Figure 9. Example of display types suitable for UC1677

No. of Backplanes	Icons	Digits/Characters		Dot matrix/elements
		7-SEG	14-SEG	
4	640	80	40	640 dots (4x160)
3	480	60	30	480 dots (3x160)
2	320	40	20	320 dots (2x160)
1	160	20	10	160 dots (1x160)

Remark:

[1] 7 segment display has 8 elements including the decimal point.

[2] 14 segment display has 16 elements including decimal point and accent dot.

All the display configurations in the table above can be implemented in the typical systems shown in Figure 10 and Figure 11.

Ultrachip Confidential
Preliminary Confidential

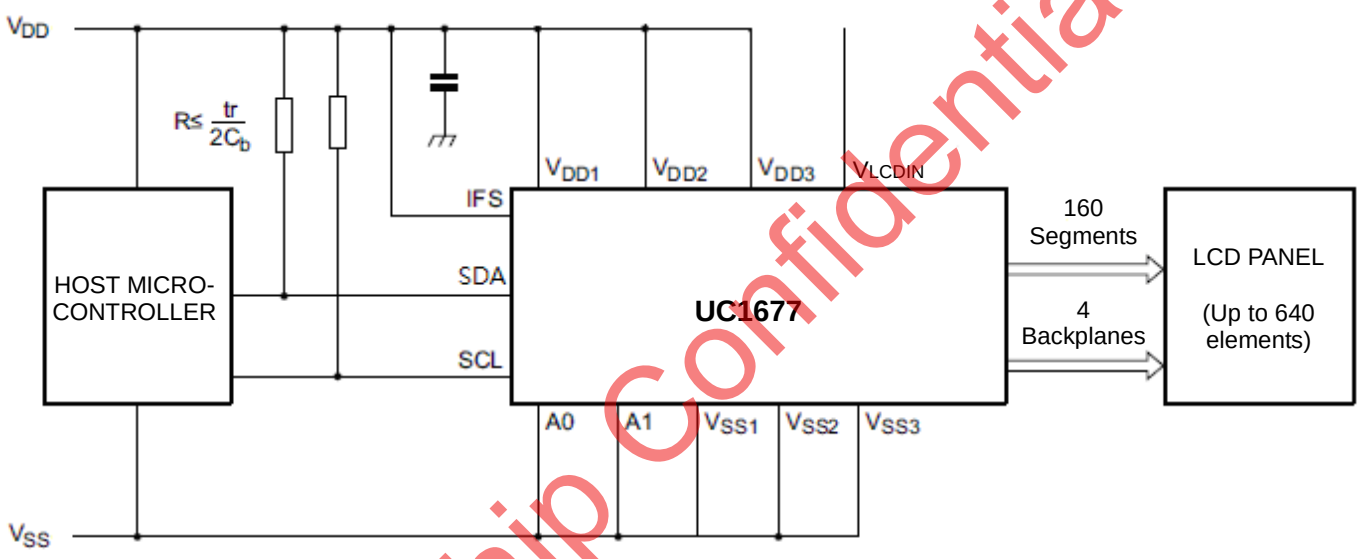

Remark:
VDD1 to VDD3 from 2.5 V to 5.5 V.
VDD1 to VDD3 can be connected to the same power supply.
VSS1 to VSS3 can be connected to the same ground supply.

Figure 10. Typical system configuration if using the External VLCD generation and I2C-bus

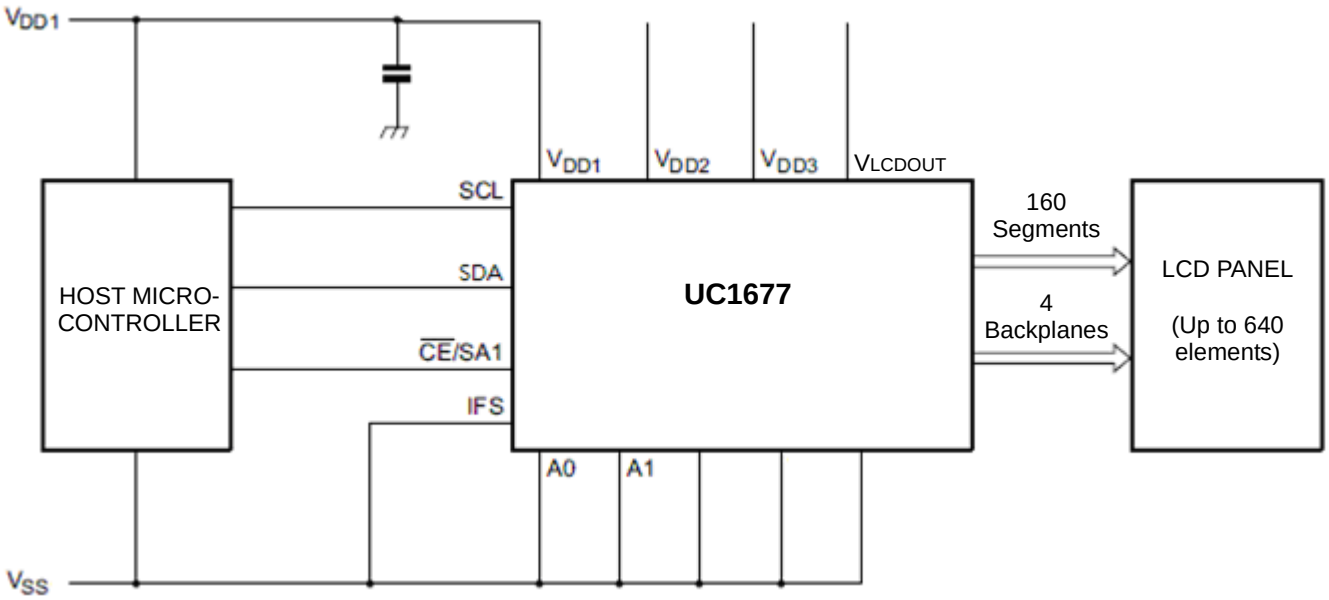

Remark:
VDD1 to VDD3 from 2.5 V to 5.5 V.

Figure 11. Typical system configuration if using the Internal VLCD and SPI-bus

Ultrachip Confidential

The host microcontroller maintains the communication channel with the UC1677. The only other connections required to complete the system are the power supplies (VDD1 to VDD3, VSS1 to VSS3), the VLCD pins, the external capacitors, and the LCD panel selected for the application. The appropriate biasing voltages for the multiplexed LCD waveforms are generated internally.

External capacitors of 100 nF minimum are required on each of the pins VDD1 to VDD3. VDD1 to VDD3 can be connected to the same power supply. In this case, a capacitor of 300 nF minimum is required.

VSS1 to VSS3 can be connected to the same ground supply.

The VLCD pins can be connected, whether VLCD is generated internally or supplied from external. An external capacitor of 300 nF minimum is recommended for VLCD. For high display loads, 1uF is suggested.

Ultrachip Confidential
Preliminary
Confidential

LCD VOLTAGE

VLCD PIN

The VLCD pins are used for VLCD supply input, VLCD voltage output, and VLCD regulation circuitry input.

The VLCD voltage can be generated on-chip or externally supplied.

EXTERNAL VLCD SUPPLY

When the external VLCD supply is selected (CPE = 0), the VLCD voltage must be supplied to the pin VLCD.

VLCD can be directly supplied to the VLCD pin. In this case, the internal charge pump must not be enabled, otherwise a high current may occur on pin VDD2 and pin VLCD. When VLCD is supplied externally, no internal temperature compensation occurs on this voltage even if bit TCE is set logic 1. The VLCD voltage which is supplied externally will be available at the segments and backplanes of the device through the chosen bias system. Also programming the V[7:0] bit field has no effect on the externally supplied VLCD.

INTERNAL VLCD GENERATION

When the internal VLCD generation is selected (CPE = 1), the VLCD voltage is available on pin VLCD.

VLCD can be generated by an on-chip charge pump and controlled by command. The VLCD voltage is available on pin VLCD.

The charge pump is controlled by the Charge-pump-ctrl command. It can be enabled with the CPE bit. The multiplier setting can be configured with the CPC[2:0] bits. The charge pump can generate a VLCD up to 5 x VDD2.

VLCD programming

VLCD can be programmed by using the V[7:0].

The final value of VLCD is a combination of the programmed V[7:0] value and the output of the temperature compensation block, VT[7:0]. The system is exemplified in Figure 12.

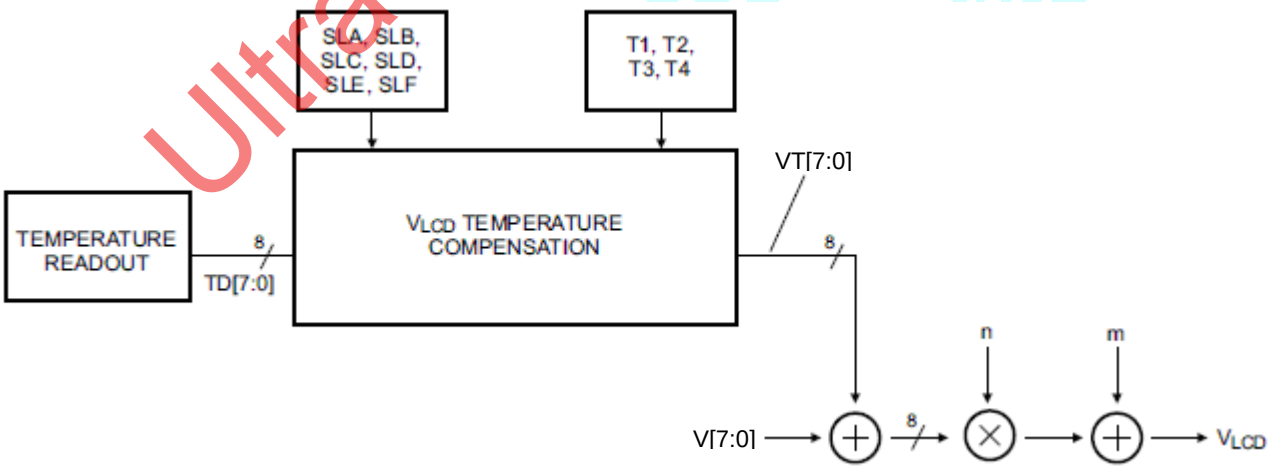

Figure 12. VLCD generation including temperature compensation

In Equation 2 the main parameters are the programmed digital value term and the compensated temperature term.

$$V_{LCD} = [V[7:0] + VT[7:0]] \times n + m \quad \ldots\ldots (2)$$

1. V[7:0] is the binary value of the programmed voltage.
2. VT[7:0] is the binary value of the temperature compensated voltage. Its value comes from the temperature compensation block and is a two's complement which has the value 0h at 20°C.
3. m and n are fixed values.

Parameters for Vlcd generation: m: 3.99V, n: 0.03V

Ultrachip Confidential

Figure 13 show how Vlcd changes with the programmed value of V[7:0].

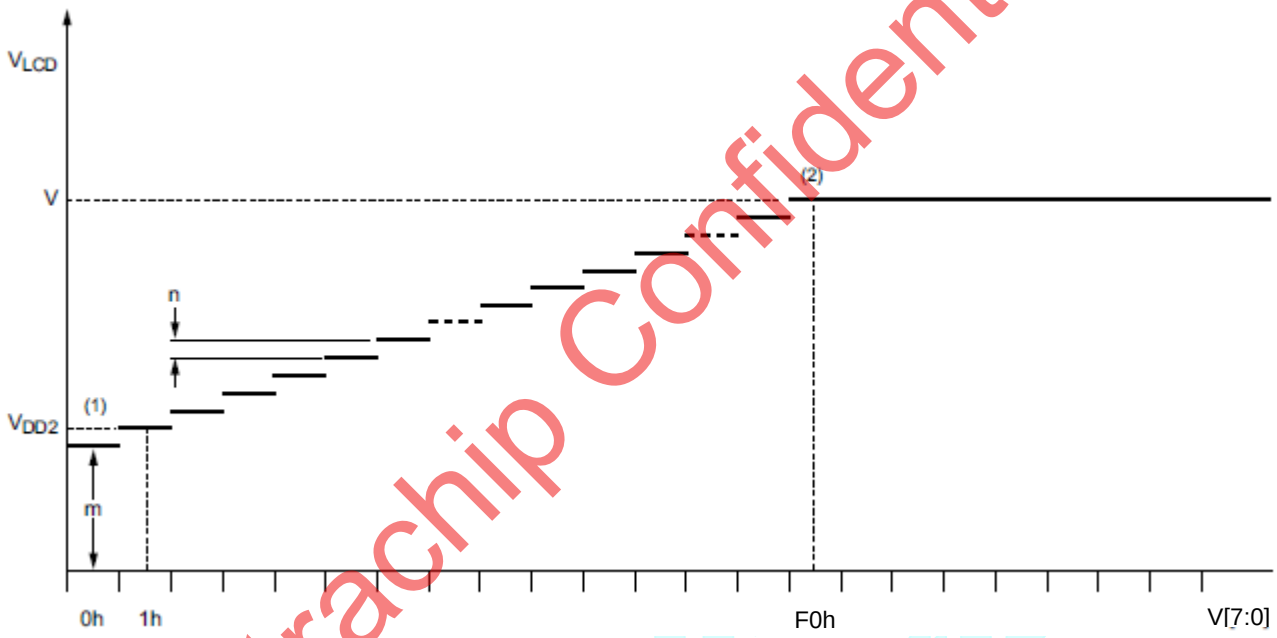

Remark:

(1) V[7:0] must be set so that VLCD > VDD2.

(2) Automatic limitation for VLCD > 11.2 V.

Figure 13. VLCD programming of UC1677 (assuming VT[7:0] = 0h)

Remark:

1. It is important that V[7:0] is set to such a value that the resultant VLCD, including the temperature compensation VT[7:0], is higher than VDD2.
2. Programmable range of V[7:0] is from 0h to F0h. This would allow achieving a VLCD above 11.2V but 11.2V is the built-in automatic limit.

VLCD driving capability

Figure 14 illustrates the main factor determining how much current the charge pump can deliver.

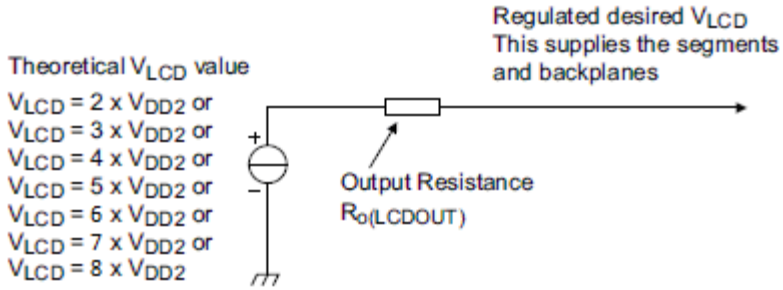

Figure 14. Charge pump model (used to characterize the driving strength)

Ultrachip Confidential
Preliminary Confidential

The output resistance of the charge pump is specified in the table below.

Charge pump configuraton	R0 (Vlcd) (Typical)	Unit
V_{LCD}=V_{DD}2 x 2	2.5	KΩ
V_{LCD}=V_{DD}2 x 3	6	KΩ
V_{LCD}=V_{DD}2 x 4	10.5	KΩ
V_{LCD}=V_{DD}2 x 5	18	KΩ
V_{LCD}=V_{DD}2 x 6	(TBD)	KΩ
V_{LCD}=V_{DD}2 x 7	(TBD)	KΩ
V_{LCD}=V_{DD}2 x 8	(TBD)	KΩ

Remark: The UC1677 has a built-in automatic limitation of VLCD, set to 11.2 V. The maximum VLCD that can be programmed is expressed by the following equation:

V_{LCD}(max) = min (11.2V, V_{DD}2 x n – R_0(V_{LCD}) x I_{LOAD}),

where n is the multiplication factor of the charge pump. I_{LOAD} is the overall current sink by the segments and backplanes outputs depending on the display, plus the on-chip VLCD current consumption.

With these values, it can be calculated how much current the charge pump can drive under certain conditions, as shown in Figure 15 and Figure 16.

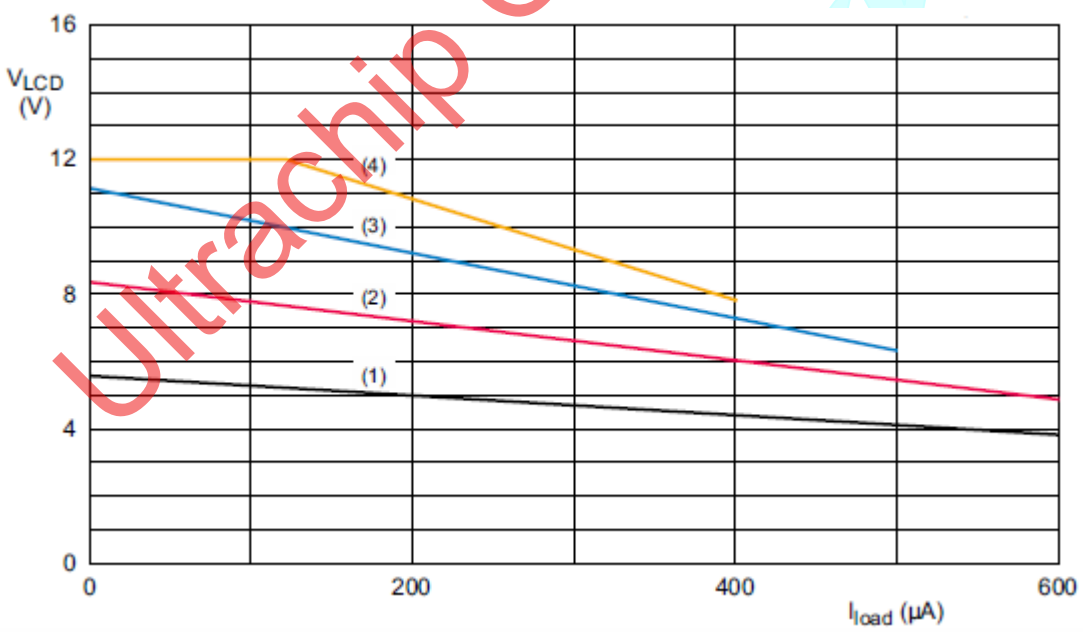

Conditions: VDD2 = 3.0 V, RITO(VSS2), RITO(VDD2), RITO(VLCD) = 50 Ω, Tamb = 27 °C.

Charge pump configuration:

(1) VLCD = 2 x VDD2.

(2) VLCD = 3 x VDD2.

(3) VLCD = 4 x VDD2.

(4) VLCD = 5 x VDD2.

(5) VLCD = 6 x VDD2.

(6) VLCD = 7 x VDD2.

(7) VLCD = 8 x VDD2.

I_{LOAD} is the overall current sink by the segments and backplanes outputs depending on the display, plus the on-chip VLCD current consumption.

Reading example: VLCD can be programmed to 10 V by using the charge pump configuration (3) or (4). With configuration (3), VLCD can be programmed to 10 V for a current load up to about 120 uA. With configuration (4), VLCD can be programmed to 10 V for a current load up to about 260 uA.

Remark: Only the charge pump configuration (7) allows programming VLCD = 11.2 V when VDD2 = 2.5 V.

Figure 15. Charge pump driving capability with VDD2 = 2.5 V

Ultrachip Confidential

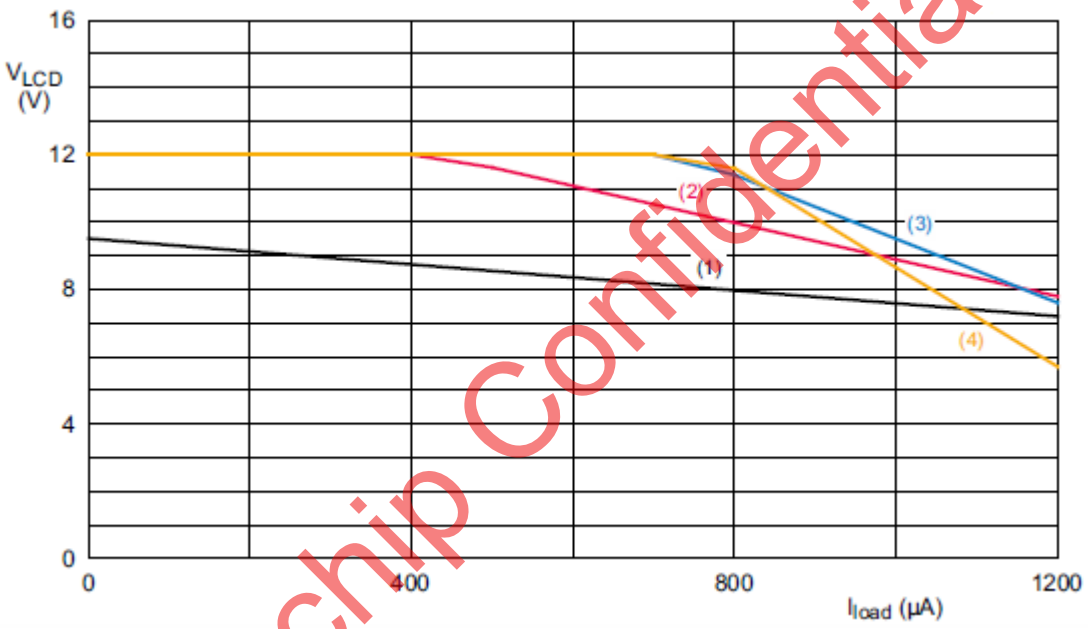

Conditions: VDD2 = 5.0 V, RITO(VSS2), RITO(VDD2), RITO(VLCD) = 50 Ω, Tamb = 27 °C.

Charge pump configuration:

(1) VLCD = 2 x VDD2.

(2) VLCD = 3 x VDD2.

(3) VLCD = 4 x VDD2.

(4) VLCD = 5 x VDD2.

(5) VLCD = 6 x VDD2.

(6) VLCD = 7 x VDD2.

(7) VLCD = 8 x VDD2.

ILOAD is the overall current sink by the segment and backplane outputs depending on the display, plus the on-chip VLCD current consumption.

Reading example: VLCD can be programmed to 10 V by using the charge pump configuration (2) or (3). With configuration (2), VLCD can be programmed to 10 V for a current load up to about 780 uA. With configuration (3), VLCD can be programmed to 10 V for a current load up to about 940 uA.

Remark: The charge pump configuration (4) has no benefit compared to configuration (3) and is therefore not recommended when VDD2 = 5.0 V.

Figure 16. Charge pump driving capability with VDD2 = 5.0 V

It has to be considered that the driving capability of the charge pump is depending on the resistance of the Indium Tin Oxide (ITO) tracks, see Figure 18 and Figure 17.

Ultrachip Confidential
Preliminary Confidential

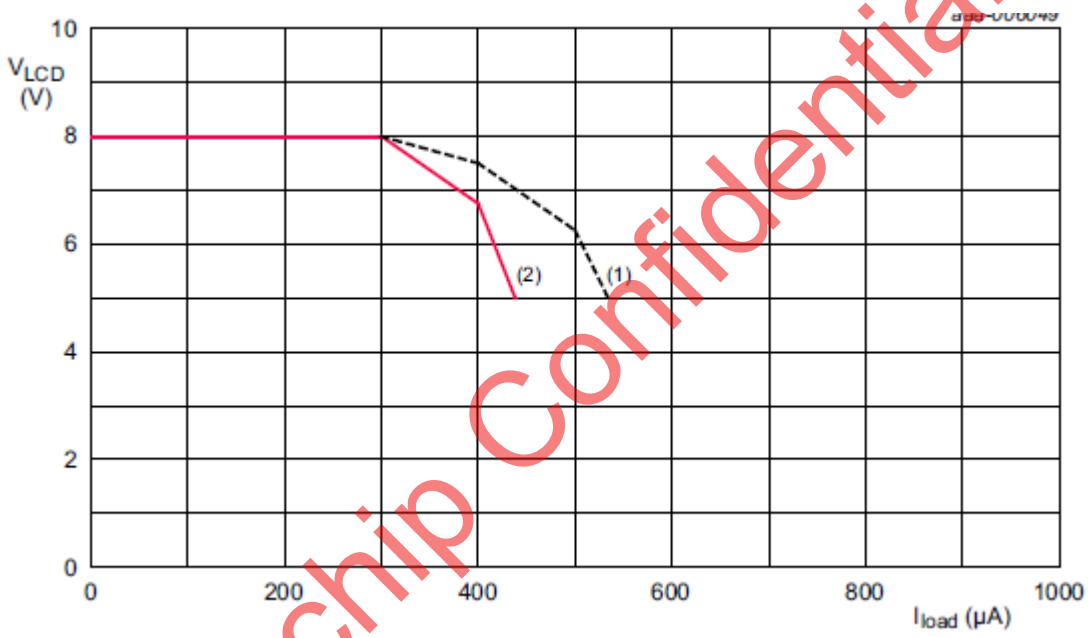

Conditions: VDD2 = 3 V; charge pump configuration: VLCD = 4 x VDD2; VLCD = 8 V; Tamb = 27 °C.

(1) RITO(VSS2), RITO(VDD2), RITO(VLCD) = 50 Ω.

(2) RITO(VSS2), RITO(VDD2), RITO(VLCD) = 100 Ω.

ILOAD is the overall current sink of the segment and backplane outputs depending on the display, plus the on-chip VLCD current consumption.

Figure 17. VLCD with respect to Iload at VDD2 = 3 V

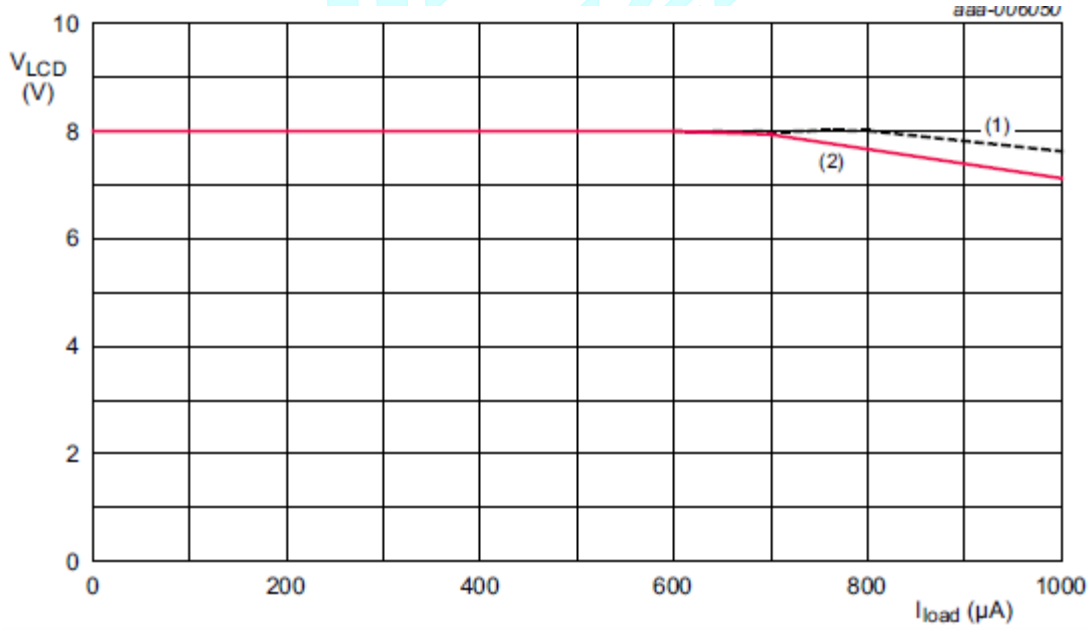

Conditions: VDD2 = 5 V; charge pump configuration: VLCD = 2 x VDD2; VLCD = 8 V; Tamb = 27 °C.

(1) RITO(VSS2), RITO(VDD2), RITO(VLCD) = 50 Ω.

(2) RITO(VSS2), RITO(VDD2), RITO(VLCD) = 100 Ω.

ILOAD is the overall current sink of the segment and backplane outputs depending on the display, plus the on-chip VLCD current consumption.

Figure 18. VLCD with respect to Iload at VDD2 = 5 V

Ultrachip Confidential

TEMPERATURE MEASUREMENT AND TEMPERATURE COMPENSATION OF VLCD

Temperature readout

The UC1677 has a built-in temperature sensor which provides an 8-bit digital value (TD[7:0]) of the ambient temperature. This value can be read by command. The actual temperature is determined from TD[7:0] using Equation 3.

$$T(^{o}C) = 0.6275 \times TD[7:0] - 40 \quad \ldots\ldots\ldots\ldots\ldots(3)$$

TD[7:0] = FFh means that no temperature readout is available or was performed. FFh is the default value after Power-On Reset (POR). The measurement needs about 8 ms to complete. It is repeated periodically every second as long as bit TME is set logic 1.

Due to the nature of a temperature sensor, oscillations may occur. To avoid this, a filter has been implemented in UC1677. A control bit, TMF, is implemented to enable or disable the digital temperature filter. The system is exemplified in Figure 19.

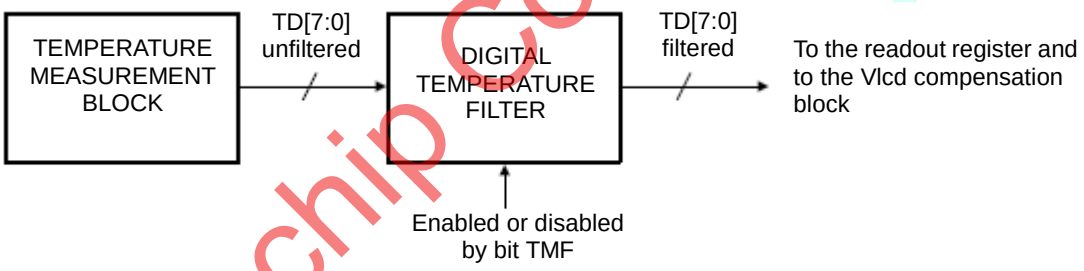

Figure 19. Temperature measurement block with digital temperature filter

The digital temperature filter introduces a certain delay in the measurement of the temperature. This behavior is illustrated in Figure 20.

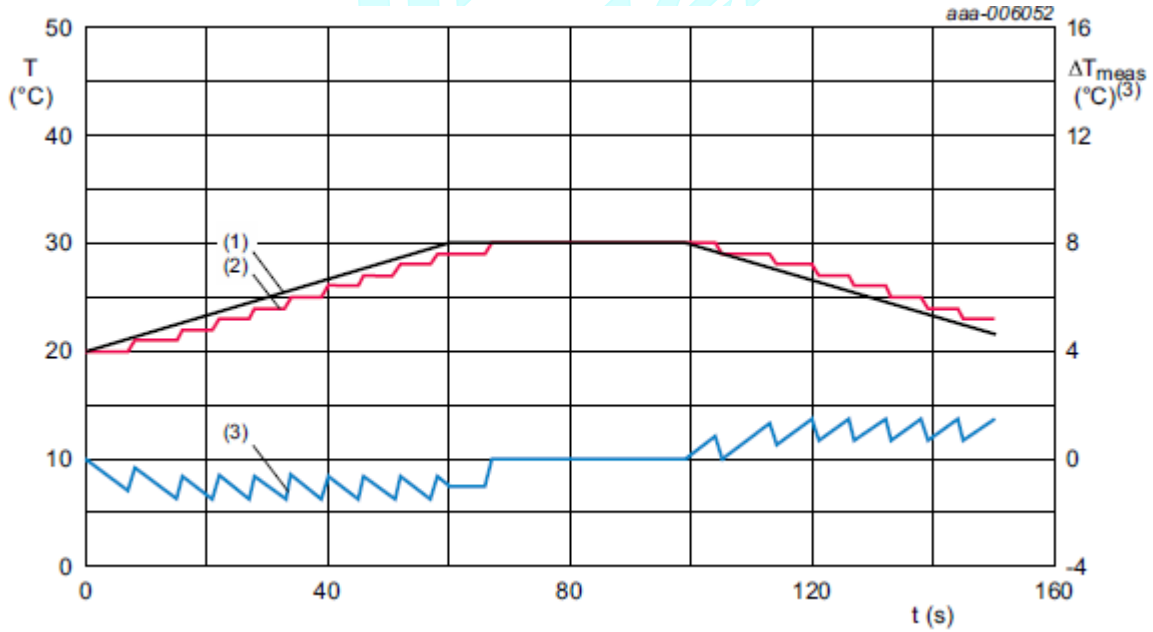

(1) Environment temperature, T1 (^{o}C).

(2) Measured temperature, T2 (^{o}C).

(3) Temperature deviation, $\Delta T = T2 - T1$.

Figure 20. Temperature measurement delay

Ultrachip Confidential

Temperature adjustment of the VLCD

Due to the temperature dependency of the liquid crystal viscosity, the LCD supply voltage may have to be adjusted at different temperatures to maintain optimal contrast. The temperature characteristics of the liquid is provided by the LCD manufacturer. The slope has to be set to compensate for the liquid behavior. Internal temperature compensation can be enabled via bit TCE. The ambient temperature range is split up to six programmable regions and to each a different temperature coefficient can be applied.

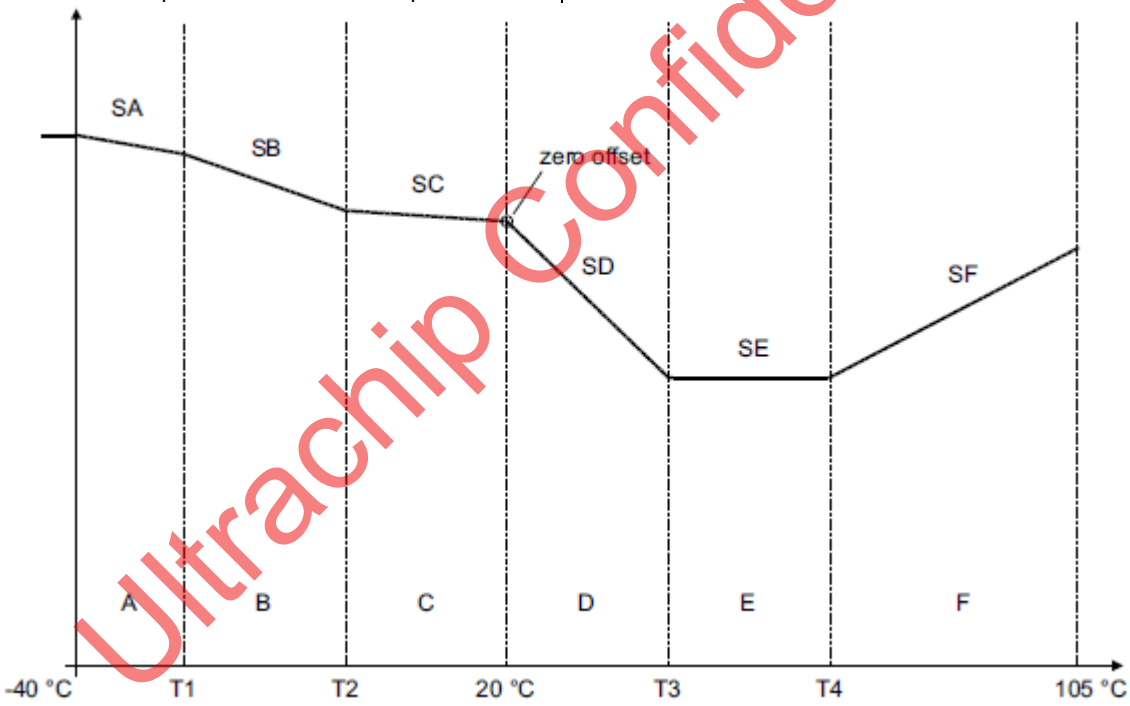

Figure 21. Example of segmented temperature coefficients

The temperature regions are determined by programming the temperature limits T1 to T4 via the TC-set-1 to TC-set-4 commands. The temperature coefficients can be selected from a choice of eight different slopes. Each one of theses coefficients is independently selected via the TC-slope command.

T1T~T4T	Temperature region 1 and 2		Temperature region 3 and 4		Remark
	T1, T2 (^{o}C)	TD	T3, T4 (^{o}C)	TD	
000b	-34	10	+29	110	The relation between the actual temperature and TD[7:0] is derived from: T (^{o}C)= 0.6275 x TD[7:0] - 40
001	-27	20	+38	124	
010	-21	30	+47	138	
011	-15	40	+55	152	
100	-9	50	+64	166	
101	-2	60	+73	180	
110	+4	70	+82	194	
111	+10	80	+85	200	

Remark: The programming has to be made such that T1 < T2 and T3 < T4 otherwise the VLCD temperature compensation will not be executed.

Ultrachip Confidential

TSA~TSF	Slope factor (mV/°C)	Temperature coefficients SA to SF	Remark
000b	0	0.000	The relationship between the temperature coefficients SA to SF and the slope factor is derived from the following equation: $Sn=\frac{0.6275(^{o}C)}{LSB_of_V[7:0](mV)}$ where LSB of V[7:0] ≅ 30 mV.
001	-6	-0.125	
010	-12	-0.250	
011	-24	-0.500	
100	-60	-1.250	
101	+6	+0.125	
110	+12	+0.250	
111	+24	+0.500	

The binary value of the temperature compensated voltage VT[7:0] is calculated according to the table below.

Calculation of the temperature compensated value VT.

Temperature (°C)	Digital temperature TD[7:0]	Binary value of the temperature compensated voltage VT[7:0]
(1) T≦ -40°C	TD[7:0] = 0	-(96-T2) x SC – (T2-T1) x SB – T1 x SA
(2) -40°C < T ≦ T1	0 < TD[7:0] ≦ T1	-(96-T2) x SC – (T2-T1) x SB – (T1 – TD[7:0]) x SA
(3) T1 < T ≦ T2	T1 < TD[7:0] ≦ T2	-(96-T2) x SC – (T2-TD[7:0]) x SB
(4) T2 < T ≦ 20°C	T2 < TD[7:0] ≦ 96	-(96-TD[7:0]) x SC
(5) 20°C < T ≦ T3	96 < TD[7:0] ≦ T3	(TD[7:0]-96) x SD
(6) T3 < T ≦ T4	T3 < TD[7:0] ≦ T4	(T3-96) x SD + (TD[7:0] – T3) x SE
(7) T4 < T ≦ 85°C	T4 < TD[7:0] ≦ 200	(T3-96) x SD + (T4 – T3) x SE + (TD[7:0] – T4) x SF

```
(1)      (2)      (3)      (4)      (5)      (6)      (7)
-----+----------+----------+----------+----------+----------+----------+
   -40°C      T1       T2      20°C       T3       T4      85°C
```

LCD VOLTAGE SELECTOR

The LCD voltage selector co-ordinates the multiplexing of the LCD in accordance with the selected LCD drive configuration. The operation of the voltage selector is controlled by the "Mode set" command. The biasing configurations that apply to the preferred modes of operation, together with the biasing characteristics as the functions of Vlcd. The resulting descrimination ratios (D) are given below:

LCD drive modes: summary of characteristics

LCD drive mode	# of back-planes	# of levels	LCD bias configuration	$\frac{V_{off(RMS)}}{V_{LCD}}$	$\frac{V_{on(RMS)}}{V_{LCD}}$	$D=\frac{V_{on(RMS)}}{V_{off(RMS)}}$
static	1	2	statis	0	1	∞
1:2 multiplex	2	3	1/2	0.354	0.791	2.236
1:2 multiplex	2	4	1/3	0.333	0.745	2.236
1:3 multiplex	3	4	1/3	0.333	0.638	1.915
1:4 multiplex	4	3	1/3	0.333	0.577	1.732

A practical value for VLCD is determined by equating V_{OFF}(RMS) with a defined LCD threshold voltage (V_{-TH}), typically when the LCD exhibits approximately 10 % contrast. In the static drive mode a suitable choice is VLCD > $3V_{-TH}$.

Multiplex drive modes of 1:3 and 1:4 with 1⁄2 bias are possible but the discrimination and hence the contrast ratios are smaller.

$$\text{Bias is calculated by } \frac{1}{1+a}$$

where a=1 for 1/2 bias,
a=2 for 1/3 bias.

Ultrachip Confidential
Preliminary Confidential

The RMS on-state voltage (Von(RMS)) for the LCD is calculated with Equation 1:

$$V_{on(RMS)} = Vlcd\sqrt{\frac{a^2+2a+n}{nx(1+a)^2}} \quad \text{.....(1)}$$

where n = 1 for static drive mode,
n = 2 for 1:2 multiplex drive mode
n = 3 for 1:3 multiplex drive mode
n = 4 for 1:4 multiplex drive mode

The RMS off-state voltage (Voff(RMS)) for the LCD is calculated with Equation 2:

$$V_{off(RMS)} = Vlcd\sqrt{\frac{a^2-2a+n}{nx(1+a)^2}} \quad \text{.....(2)}$$

Discrimination is the ratio of Von(RMS) to Voff(RMS) and is determined from Equation 3:

$$D = \frac{V_{on(RMS)}}{V_{off(RMS)}} = Vlcd\sqrt{\frac{(a+1)^2+(n-1)}{(a-1)^2+(n-1)}} \quad \text{.....(3)}$$

Using Equation 3, the descrimination for and LCD drive mode of 1:3 multiplex with 1/2 bias is $\sqrt{3}$ = 1.732,

the descrimination for and LCD drive mode of 1:4 multiplex with 1/2 bias is $\frac{\sqrt{21}}{3}$ = 1.528.

The advantage of these LCD drive modes is a reduction fo the LCD full scale voltage Vlcd as follows:

1:3 multiplex with 1/2 bias: Vlcd = $\sqrt{6}\times V_{off(RMS)}$ = 2.449 Voff(RMS)

1:4 multiplex with 1/2 bias: Vlcd = $\sqrt{6}\times V_{off(RMS)}\left[\frac{4\times\sqrt{3}}{3}\right]$ = 2.309 Voff(RMS)

These compare with Vlcd=3 Voff(RMS) when 1/3 bias is used. It should be notied that Vlcd is sometimes referred as the LCD operating voltage.

Ultrachip Confidential
Preliminary Confidential

LCD DRIVE MODE WAVEFORMS

Static drive mode

The static LCD drive mode is used when a single backplane is provided in the LCD.

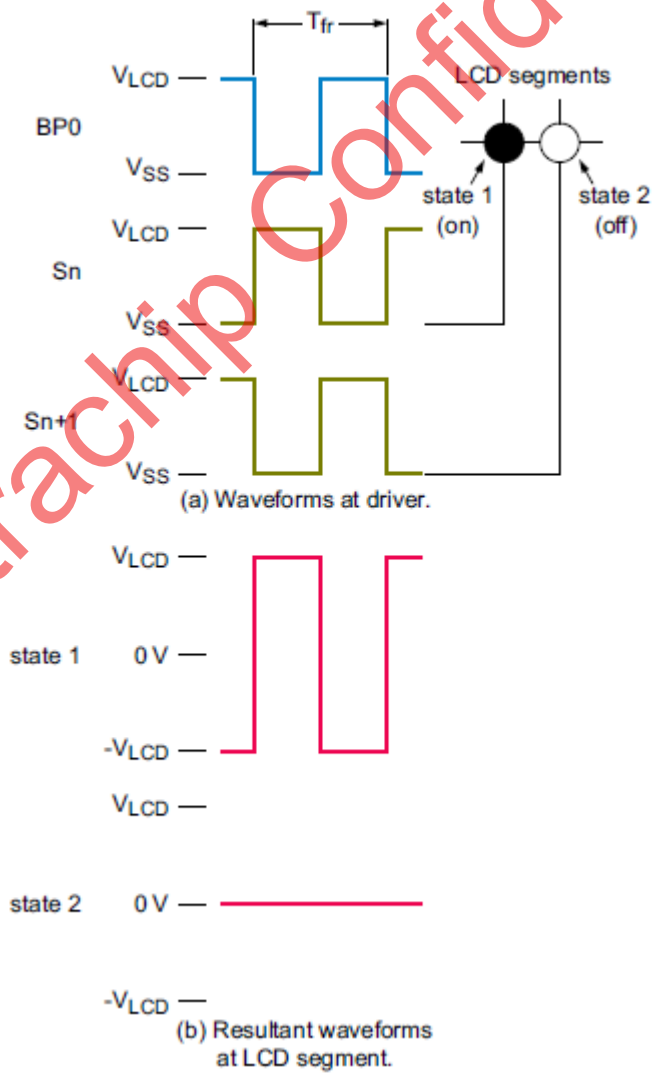

Vstate1(t) = VSn(t) - VBP0(t). Vstate2(t) = V(Sn + 1)(t) - VBP0(t). Von(RMS)(t) = VLCD. Voff(RMS)(t) = 0 V.

Figure 22. Static drive mode waveforms, line inversion mode (n = 1)

Ultrachip Confidential

Ultrachip Confidential

1:2 Multiplex drive mode

When two backplanes are provided in the LCD, the 1:2 multiplex mode applies. The UC1677 allows the use of 1⁄2 bias or 1⁄3 bias in this mode as shown in Figure 23 and Figure 24.

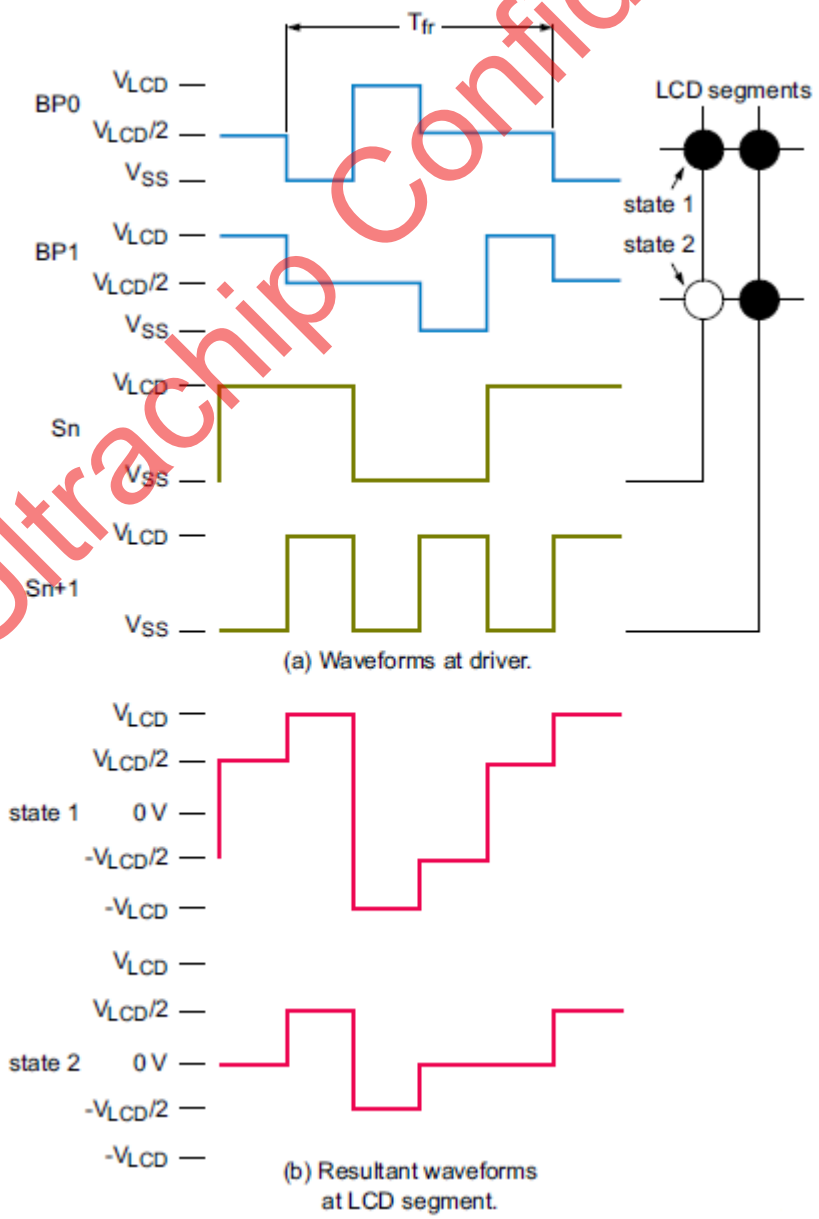

Vstate1(t) = VSn(t) - VBP0(t). Vstate2(t) = VSn(t) - VBP1(t). Von(RMS)(t) = 0.791VLCD. Voff(RMS)(t) = 0.354VLCD.

Figure 23. Waveforms for the 1:2 multiplex drive mode, 1⁄2 bias, line inversion mode (n = 1)

Ultrachip Confidential

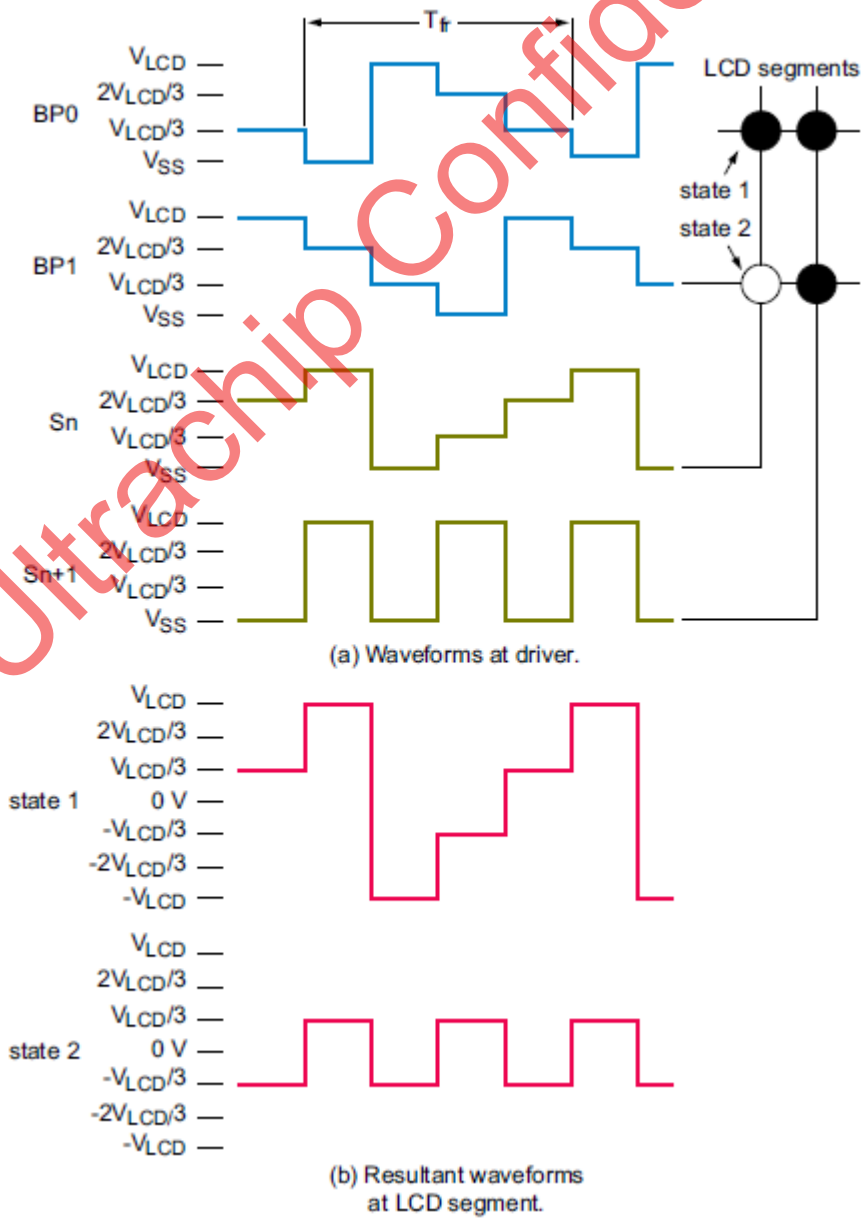

Vstate1(t) = VSn(t) - VBP0(t). Vstate2(t) = VSn(t) - VBP1(t). Von(RMS)(t) = 0.745VLCD. Voff(RMS)(t) = 0.333VLCD.

Figure 24. Waveforms for the 1:2 multiplex drive mode, 1⁄3 bias, line inversion mode (n = 1)

Ultrachip Confidential

1:3 Multiplex drive mode

When four backplanes are provided in the LCD, the 1:3 multiplex drive mode applies, as shown in Figure 25 below.

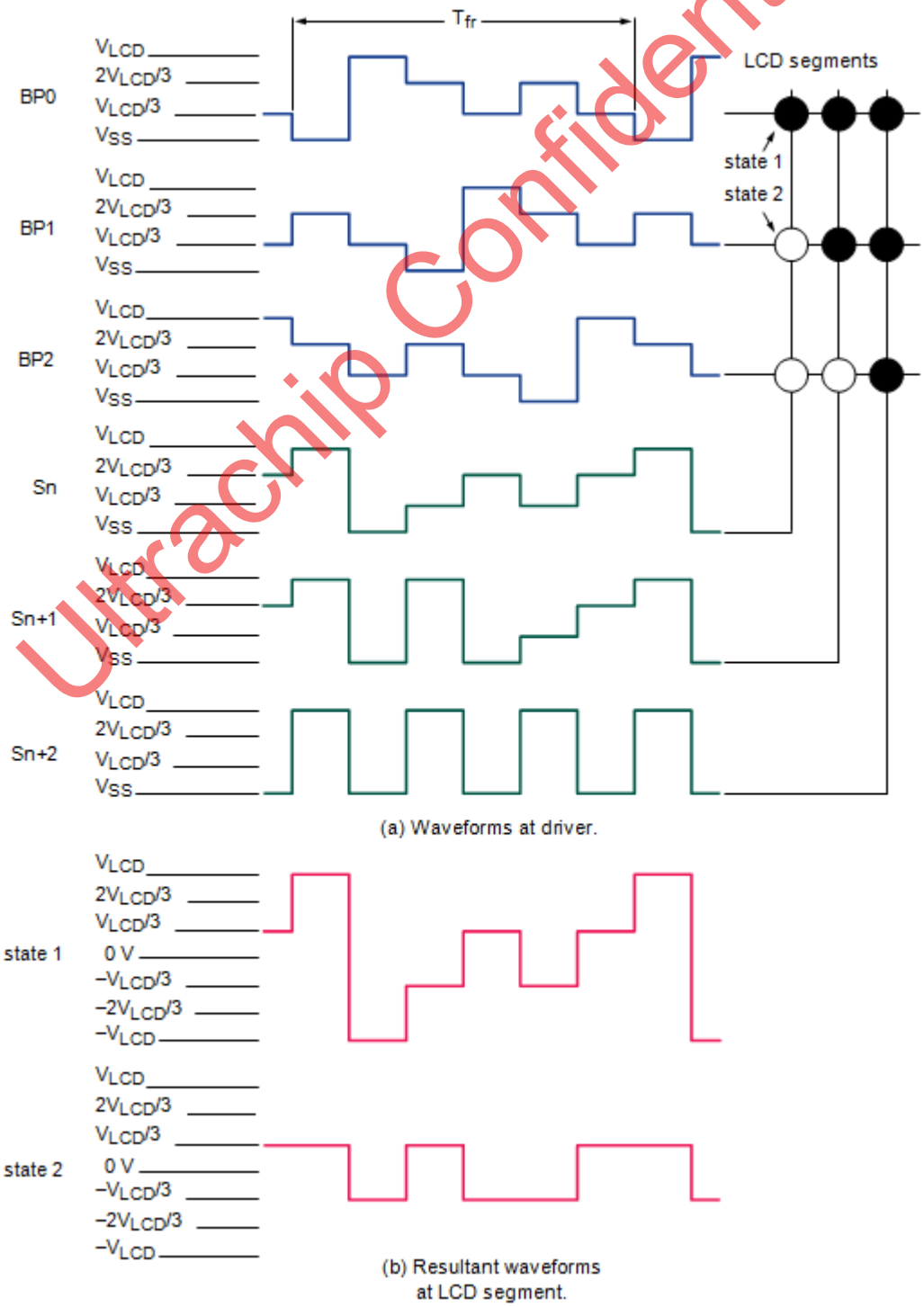

Vstate1(t) = VSn(t) - VBP0(t). Von(RMS) = 0.638VLCD. Vstate2(t) = VSn(t) - VBP1(t). Voff(RMS) = 0.333VLCD.

Figure 25. Waveforms for the 1:3 multiplex drive mode, 1⁄3 bias, line inversion mode (n = 1)

Ultrachip Confidential

1:4 Multiplex drive mode

When four backplanes are provided in the LCD, the 1:4 multiplex drive mode applies, as shown in Figure 26.

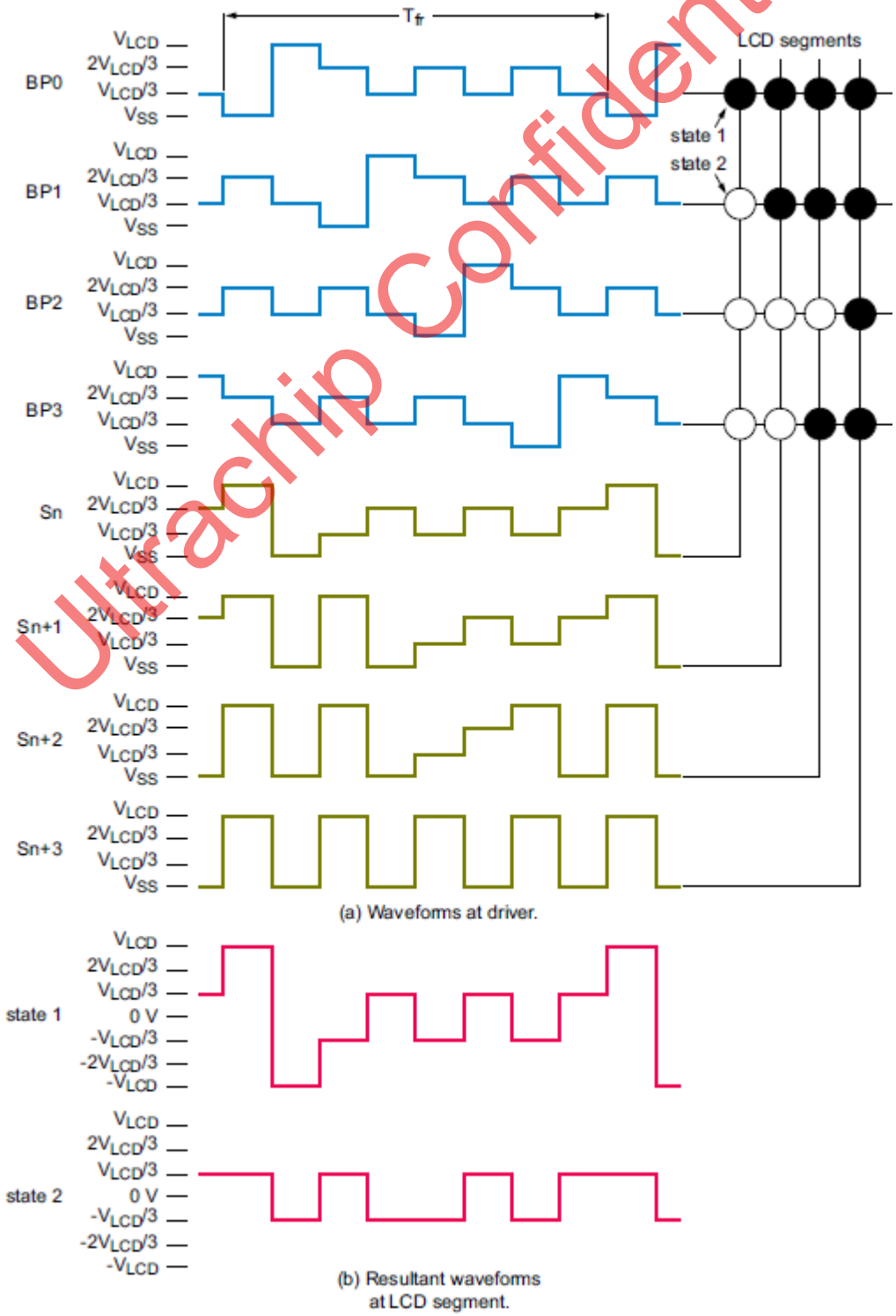

Vstate1(t) = VSn(t) - VBP0(t). Vstate2(t) = VSn(t) - VBP1(t). Von(RMS)(t) = 0.577VLCD. Voff(RMS)(t) = 0.333VLCD.

Figure 26. Waveforms for the 1:4 multiplex drive mode, 1⁄3 bias, line inversion mode (n = 1)

Ultrachip Confidential
Preliminary Confidential

Oscillator

The internal logic and the LCD drive signals of the UC1677 are timed by a frequency f_{CLK} which either is derived from the built-in oscillator frequency f_{OSC}:

$$f_{CLK} = \frac{fosc}{64} \quad \text{..... (4)}$$

or equals an external clock frequency $f_{CLK(EXT)}$:

$$f_{CLK} = f_{CLK(EXT)} \quad \text{..... (5)}$$

Oscillator – Internal Clock

The internal oscillator is enabled by connecting pin OSC to VSS. In this case the output from pin CLK provides the clock signal for any cascaded UC1677 in the system. After power-on, pin SDA must be HIGH to guarantee that the clock starts.

Oscillator – External Clock

Connecting pin OSC to V_{DD} enables an external clock source. Pin CLK then becomes the external clock input.

Remark: A clock signal must always be supplied to the device; removing the clock may freeze the LCD in a DC state, which is not suitable for the liquid crystal.

Timing and Frame Frequency

The clock frequency (f_{CLK}) determines the LCD frame frequency (f_{FR}) and is calculated as follows:

$$f_{FR} = \frac{f_{CLK}}{24}$$

The internal clock frequency, f_{CLK}, can be selected using command Frame-Rate-select. As a result, 4 frame frequencies are available: 64Hz (typical), 82Hz, 110Hz, or 110Hz :

FR[1:0]	Typical Clock Freq.	LCD Frame Freq.
00b (default)	**1536 Hz**	**64 Hz**
01b	1970 Hz	82 Hz
10b	2640 Hz	110 Hz
11b	4800 Hz	200 Hz

However, 400Hz of frame frequency is supported when using external Oscillator, (Maximum: 9.6KHz.)

The timing of the UC1677 organizes the internal data flow of the device. This includes the transfer of display data from the display RAM to the display SEG outputs. In cascaded applications, the synchronization signal (SYNC) maintains the correct timing relationship between all the UC1677 in the system.

Display Register

The display register holds the display data while the corresponding multiplex signals are generated. There is a one-to-one relationship between the data in the display register, the LCD SEG outputs and one column of the display RAM.

Segment Outputs

The LCD drive section includes 80 SEG outputs (S0 to S79), which must be connected directly to the LCD. The SEG output signals are generated in accordance with the multiplexed backplane signals and with data residing in the display register. When less than 80 SEG outputs are required the unused SEG outputs must be left open-circuit.

Backplane Outputs

The LCD drive section includes four (4) backplane outputs: BP0 to BP3. The backplane output signals are generated in accordance with the selected LCD drive mode.

static	The same signal is carried by all four (4) backplane outputs; and they can be connected in parallel for very high drive requirements.
1:2 multiplex	BP0 and BP2, BP1 and BP3 respectively carry the same signals and can also be paired to increase the drive capabilities.
1:3 multiplex	BP3 carries the same signal as BP1 does; therefore, these two adjacent outputs can be tied together to give enhanced drive capabilities.
1:4 multiplex	BP0~ BP3 must be connected directly to the LCD.

If less than four (4) backplane outputs are required, the unused outputs can be left open-circuit.

Display RAM

The display RAM is a static 80x4-bit RAM, which stores LCD data. A logic 1 in the RAM bit map indicates the on-state of the corresponding LCD element; similarly, a logic 0 indicates the off-state. There is a one-to-one correspondence between the RAM addresses and the SEG outputs and between the individual bits of a RAM word and the backplane outputs. The display RAM bit map figure below (Figure 27) shows rows 0 to 3, which correspond with the backplane outputs BP0 to BP3, and columns 0 to 79, which correspond with the SEG outputs S0 to S79. In multiplexed LCD applications, the SEG data of the first, second, third and fourth row of the display RAM are time-multiplexed with BP0, BP1, BP2, and BP3, respectively.

Columns→ Display RAM Addressed / SEG output (S)

Rows↓	0	1	2	3	4	…	…	…	76	77	78	79
Display RAM Rows / backplane outputs (BP) 0												
1												
2												
3												

Figure 27. Display RAM

This display RAM bitmap shows the direct relationship between the display RAM addresses and the SEG outputs and between the bits in a RAM word and the backplane output.

Drive Mode: Static

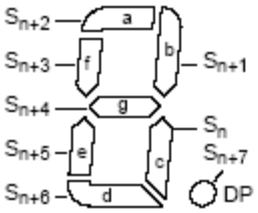

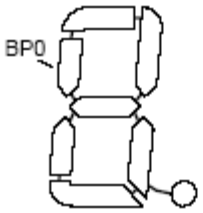

display RAM filling order

columns
display RAM address/segment outputs (s)
byte1

rows display RAM rows/backplane outputs (BP)	n	n + 1	n + 2	n + 3	n + 4	n + 5	n + 6	n + 7
0	c	b	a	f	g	e	d	DP
1	x	x	x	x	x	x	x	x
2	x	x	x	x	x	x	x	x
3	x	x	x	x	x	x	x	x

MSB LSB

Transmitted Display Byte: | c | b | a | f | g | e | d | DP |

Drive Mode: 1:2 multiplex

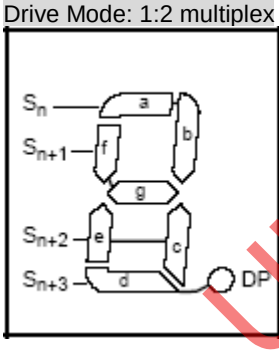

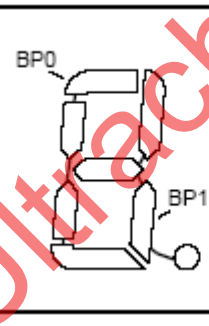

columns
display RAM address/segment outputs (s)
byte1 byte2

rows display RAM rows/backplane outputs (BP)	n	n + 1	n + 2	n + 3
0	a	f	e	d
1	b	g	c	DP
2	x	x	x	x
3	x	x	x	x

Transmitted Display Byte: | a | b | f | g | e | c | d | DP |

Drive Mode: 1:3 multiplex

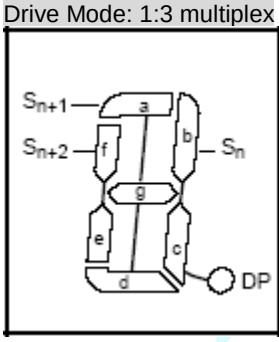

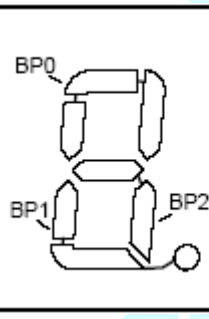

columns
display RAM address/segment outputs (s)
byte1 byte2 byte3

rows display RAM rows/backplane outputs (BP)	n	n + 1	n + 2
0	b	a	f
1	DP	d	e
2	c	g	x
3	x	x	x

Transmitted Display Byte: | b | DP | c | a | d | g | f | e |

Drive Mode: 1:4 multiplex

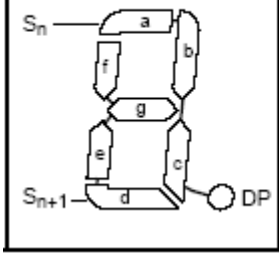

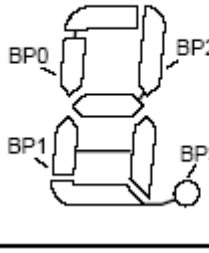

columns
display RAM address/segment outputs (s)
byte1 byte2 byte3 byte4 byte5

rows display RAM rows/backplane outputs (BP)	n	n + 1
0	a	f
1	c	e
2	b	g
3	DP	d

Transmitted Display Byte: | a | c | b | DP | f | e | g | d |

Remark: x = data bit unchanged

Figure 28. Display RAM Filling order of Each Mode

Ultrachip Confidential

When display data is transmitted to the UC1677, the received display bytes are stored in the display RAM in accordance with the selected LCD drive mode. The data is stored as it arrives and does not wait for the acknowledge cycle as with the commands. Depending on the current multiplex drive mode, data is stored singularly, in pairs, triples or quadruples. To illustrate the filling order, an example of a 7-SEG display showing all drive modes is given in the Figure on the previous page (Figure 28); the RAM filling organization depicted applies equally to other LCD types.

The following applies to the figure on last page (Figure 28):

static	the 8 transmitted data bits are placed into row 0 of 8 successive 4-bit RAM words.
1:2 multiplex	the 8 transmitted data bits are placed in pairs into rows 0 and 1 of 4 successive 4-bit RAM words.
1:3 multiplex	the 8 bits are placed in triples into row 0, 1 and 2 of 3 successive 4-bit RAM words, with bit 3 of the third address left unchanged. It is not recommended to use this bit in a display because of the difficult addressing. This last bit may, if necessary, be controlled by an additional transfer to this address, but care should be taken to avoid overwriting adjacent data because always full bytes are transmitted.
1:4 multiplex	the 8 transmitted data bits are placed in quadruples into row 0, 1, 2, and 3 of 2 successive 4-bit RAM words.

Data Pointer

The addressing mechanism for the display RAM is realized using a data pointer.

This allows the loading of an individual display data byte, or a series of display data bytes, into any location of the display RAM. The sequence commences with the initialization of the data pointer by the load-data-pointer command.

Following this command, an arriving data byte is stored at the display RAM address indicated by the data pointer. The filling order is shown in the Figure 28 on the previous page.

After each byte is stored, the content of the data pointer is automatically increased by a value dependent on the selected LCD drive mode:

Static	by eight (8)
1:2 multiplex	by four (4)
1:3 multiplex	by three (3)
1:4 multiplex	by two (2)

If an I^2C-bus data access is terminated early then the state of the data pointer is unknown. Consequently, the data pointer must be rewritten prior to further RAM accesses.

Sub-address Counter

The storage of display data is conditioned by the content of the sub-address counter. Storage is allowed only when the content of the sub-address counter match with the hardware sub-address applied to A0, A1, and A2. The sub-address counter value is defined by the device-select command (see command (4) Device-select). If the content of the sub-address counter and the hardware sub-address do not match, then data storage is inhibited but the data pointer is incremented as if data storage had taken place. The sub-address counter is also increased when the data pointer overflows. The storage arrangements described lead to extremely efficient data loading in cascaded applications. When a series of display bytes are sent to the display RAM, automatic wrap-over to the next UC1677 occurs when the last RAM address is exceeded. Sub-addressing across device boundaries is successful even if the change to the next device in the cascade occurs within a transmitted character (ex. during the 27th display data byte transmitted in 1:3 mux mode).

The hardware sub-address must not be changed whilst the device is being accessed on the I^2C -bus interface.

Output bank selector

The output bank selector selects one of the 4 rows per display RAM address for transfer to the display register. The actual row selected depends on the particular LCD drive mode in operation and on the instant in the multiplex sequence.

Static	Row 0 is selected
1:2 multiplex	Rows 0 and 1 are selected
1:3 multiplex	Rows 0, 1, and 2 are selected sequentially
1:4 multiplex	All RAM addresses of row 0 are selected, these are followed by the contents of row 1, row 2, and then row 3.

The UC1677 includes a RAM bank switching feature in the static and 1:2 multiplex drive modes. In the static drive mode, the bank-select command may request the contents of row 2 to be selected for display instead of the contents of row 0. In the 1:2 mode, the contents of rows 2 and 3 may be selected instead of rows 0 and 1. This gives the provision for preparing display information in an alternative bank and to be able to switch to it once it is assembled.

Input bank selector

The input bank selector loads display data into the display RAM in accordance with the selected LCD drive configuration. Display data can be loaded in row 2 in static drive mode or in rows 2 and 3 in 1:2 multiplex drive mode by using the bank-select command. The input bank selector functions independently to the output bank selector.

Blinking

The display blink capabilities of the UC1677 are very versatile. The whole display can blink at frequencies selected by the blink-select command (see command (6) Blink-select). The blink frequencies are fractions of the clock frequency. The ratios between the clock and blink frequencies depend on the blink mode selected:

Blink mode	Operating mode ratio	Blink frequency			
		fclk=1.536kHz	fclk=1.97kHz	fclk=2.640kHz	fclk=4.800kHz
off	–	blinking off	blinking off	Blinking off	Blinking off
1	fclk / 768	2.0Hz	2.5Hz	3.5Hz	6.3Hz
2	fclk / 1536	1.0Hz	1.3Hz	1.7Hz	3.1Hz
3	fclk / 3072	0.5Hz	0.6Hz	0.9Hz	1.6Hz

Ultrachip Confidential
Preliminary
For internal use only

An additional feature is for an arbitrary selection of LCD SEGs to blink. This applies to the static and 1:2 multiplex drive modes and can be implemented without any communication overheads. By means of the output bank selector, the displayed RAM banks are exchanged with alternate RAM banks at the blink frequency. This mode can also be specified by the blink-select command.

In the 1:3 and 1:4 multiplex modes, where no alternate RAM bank is available, groups of LCD SEGs can blink by selectively changing the display RAM data at fixed time intervals.

If the entire display can blink at a frequency other then the typical blink frequency. This can be effectively performed by resetting and setting the display enable bit E at the required rate using the `Mode-set` command in the `Command Description` section.

Characteristics of the I^{2}C-bus

The I^{2}C-bus is for bidirectional, two-line communication between different ICs or modules. The two lines are a Serial Data line (SDA) and a Serial Clock Line (SCL). Both lines must be connected to a positive supply via a pull-up resistor when connected to the output stages of a device. Data transfer may be initiated only when the bus is not busy.

By connecting pin SDAACK to pin SDA on the UC1677, the SDA line becomes fully I^{2}C-bus compatible. In COG applications where the track resistance from the SDAACK pin to the system SDA line can be significant, possibly a voltage divider is generated by the bus pull-up resistor and the Indium Tin Oxide (ITO) track resistance. As a consequence it may be possible that the acknowledge generated by the UC1677 can't be interpreted as logic 0 by the master. In COG applications where the acknowledge cycle is required, it is therefore necessary to minimize the track resistance from the SDAACK pin to the system SDA line to guarantee a valid LOW level.

By separating the acknowledge output from the serial data line (having the SDAACK open circuit) design efforts to generate a valid acknowledge level can be avoided. However, in that case the I^{2}C -bus master has to be set up in such a way that it ignores the acknowledge cycle.

The following definition assumes SDA and SDAACK are connected and refers to the pair as SDA.

Ultrachip Confidential
Preliminary Confidential

Ultrachip Confidential
Preliminary
Confidential

HOST INTERFACES

CONTROL BYTE AND REGISTER SELECTION

After initiating the communication over the bus and sending the slave address (I2C-bus) or subaddress (SPI-bus), a control byte follows. The purpose of this byte is to indicate both, the content for the following data bytes (RAM or command) and to indicate that more control bytes will follow.

Typical sequences could be:

- Slave address/subaddress - control byte - command byte - command byte – command byte - end
- Slave address/subaddress - control byte - RAM byte - RAM byte - RAM byte - end
- Slave address/subaddress - control byte - command byte - control byte - RAM byte - end

This allows sending a mixture of RAM and command data in one access or alternatively, to send just one type of data in one access. In this way, it is possible to configure the device and then fill the display RAM with little overhead. The display bytes are stored in the display RAM at the address specified by the data pointer.

I²C INTERFACE

The I2C-bus is for bidirectional, two-line communication between different ICs or modules. The two lines are a Serial DAta line (SDA) and a Serial CLock line (SCL). Both lines must be connected to a positive supply via a pull-up resistor when connected to the output stages of a device. Data transfer may be initiated only when the bus is not busy.

In Chip-On-Glass (COG) applications, where the track resistance between the SDA output pin to the system SDA input line can be significant, the bus pull-up resistor and the Indium Tin Oxide (ITO) track resistance may generate a voltage divider. As a consequence it may be possible that the acknowledge cycle, generated by the LCD driver, cannot be interpreted as logic 0 by the master. Therefore it is an advantage for COG applications to have the acknowledge output separated from the data line. For that reason, the SDA line of the UC1677 is split into SDI/SDAIN and SDAOUT.

In COG applications where the acknowledge cycle is required, it is necessary to minimize the track resistance from the SDAOUT pin to the system SDI/SDAIN line to guarantee a valid LOW level.

By splitting the SDA line into SDI/SDAIN and SDAOUT (having the SDAOUT open circuit), the device could be used in a mode that ignores the acknowledge cycle. Separating the acknowledge output from the serial data line can avoid design efforts to generate a valid acknowledge level. However, in that case the I2C-bus master has to be set up in such a way that it ignores the acknowledge cycle.2

By connecting pin SDAOUT to pin SDI/SDAIN the SDI/SDAIN line becomes fully I2C-bus compatible. The following definition assumes SDI/SDAIN and SDAOUT are connected and refers to the pair as SDA.

Bit transfer

One data bit is transferred during each clock pulse. The data on the SDA line must remain stable during the HIGH period of the clock pulse as changes in the data line at this time are interpreted as a control signal (see Figure 32).

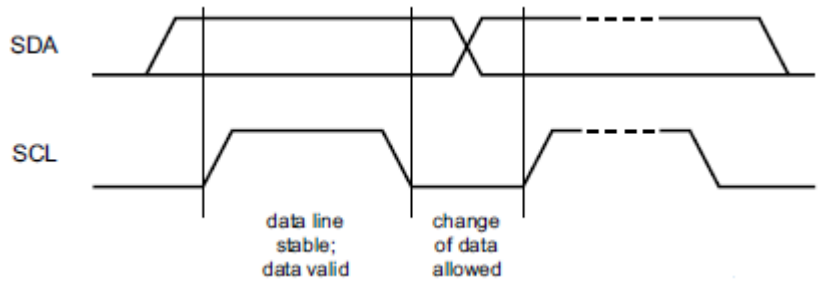

Figure 32. I²C-bus - bit transfer

START and STOP conditions

Both data and clock lines remain HIGH when the bus is not busy.

A HIGH-to-LOW change of the data line, while the clock is HIGH is defined as the START condition (S).

A LOW-to-HIGH change of the data line while the clock is HIGH is defined as the STOP condition (P).

The START and STOP conditions are shown in Figure 33.

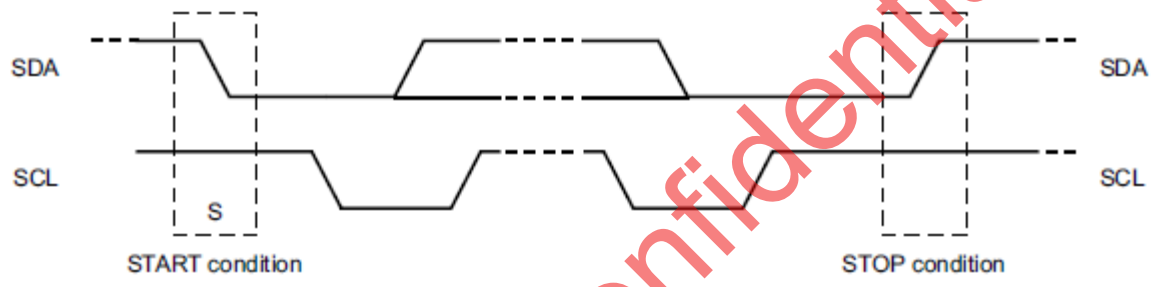

Figure 33. I^{2}C-bus - definition of START and STOP conditions

System configuration

A device generating a message is a transmitter; a device receiving a message is the receiver. The device that controls the message is the master; and the devices which are controlled by the master are the slaves. The system configuration is shown in Figure 34.

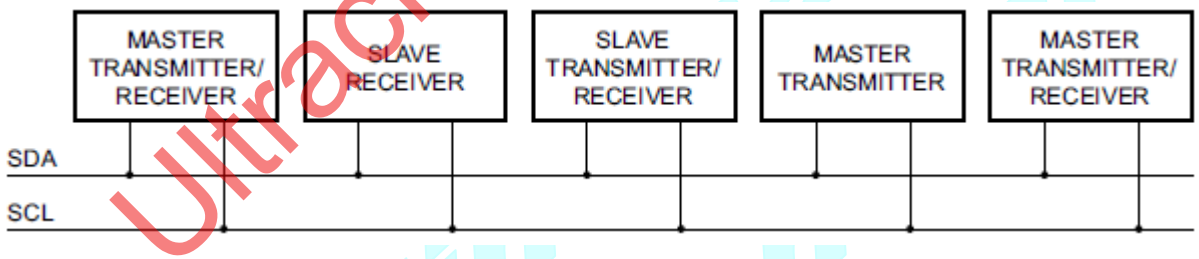

Figure 34. I^{2}C-bus - system configuration

Acknowledge

The number of data bytes transferred between the START and STOP conditions from transmitter to receiver is unlimited. Each byte of 8 bits is followed by an acknowledge cycle.

- A slave receiver which is addressed must generate an acknowledge after the reception of each byte.
- Also a master receiver must generate an acknowledge after the reception of each byte that has been clocked out of the slave transmitter.
- The device that acknowledges must pull-down the SDA line during the acknowledge clock pulse, so that the SDA line is stable LOW during the HIGH period of the acknowledge related clock pulse (set-up and hold times must be considered).
- A master receiver must signal an end of data to the transmitter by not generating an acknowledge on the last byte that has been clocked out of the slave. In this event, the transmitter must leave the data line HIGH to enable the master to generate a STOP condition.

Acknowledgement on the I2C-bus is shown in Figure 35.

Ultrachip Confidential
Preliminary Confidential

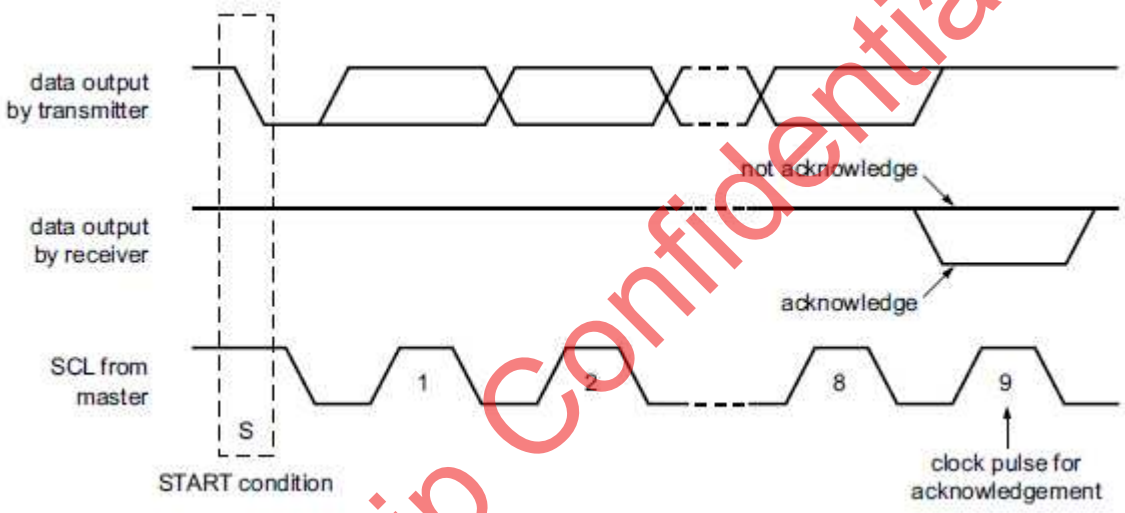

Figure 35. Acknowledgement on the I2C-bus

I²C-bus controller

The UC1677 acts as an I2C-bus slave receiver. It does not initiate I2C-bus transfers. The only data output from UC1677 is the acknowledge signals and the temperature readout byte of the selected device.

Input filters

To enhance noise immunity in electrically adverse environments, RC low-pass filters are provided on the SDA and SCL lines.

I²C-bus slave address

Device selection depends on the I2C-bus slave address.

I²C slave addres byte

7	6	5	4	3	2	1	0
0	1	1	1	0	0	SA	R/ $\overline{W}$

R/ $\overline{W}$: 0b: write data 1b: read data

Bit 1 and bit 2 of the slave address are defined by connecting the inputs SA0 and SA1 to either VSS1 (logic 0) or VDD1 (logic 1). Therefore, four instances of UC1677 can be distinguished on the same I2C-bus.

I2C-bus protocol

The I2C-bus protocol is shown in Figure 36. The sequence is initiated with a START condition (S) from the I2C-bus master which is followed by one of the four UC1677 slave addresses available. All UC1677 with the corresponding A1 and A0 level acknowledge in parallel to the slave address, but all UC1677 with the alternative A1 and A0 levels ignore the whole I2C-bus transfer.

Ultrachip Confidential
Preliminary Confidential

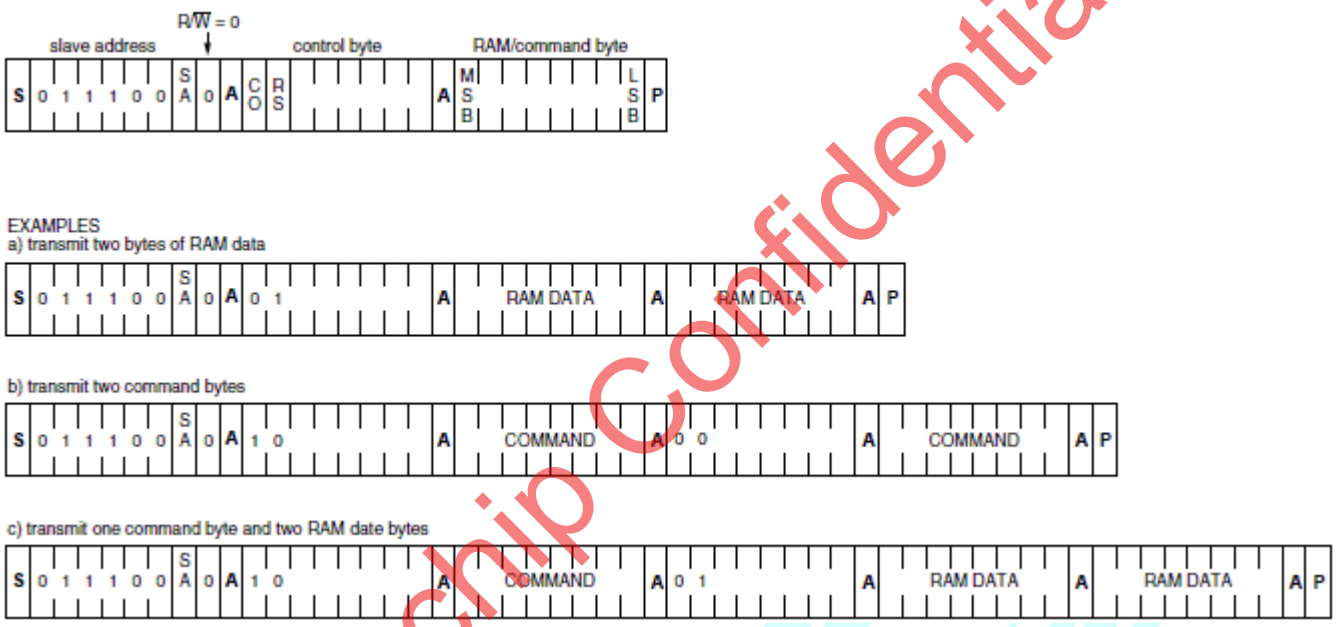

Figure 36. I2C-bus protocol - write mode

After acknowledgement, a control byte follows which defines if the next byte is RAM or command information. The control byte also defines whether the next byte is a control byte or further RAM or command data.

For a temperature readout, the R/W bit must be logic 1. The next data byte following is provided by the UC1677 as shown in Figure 37.

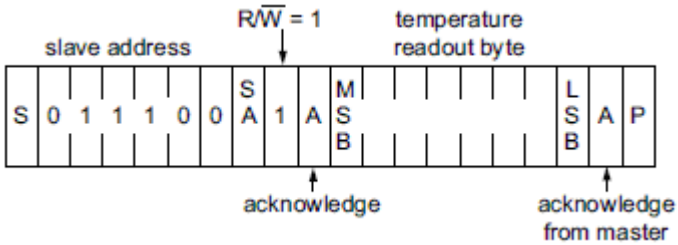

Figure 37. I2C-bus protocol - read mode

SPI INTERFACE

Data transfer to the device is made via a four-line SPI-bus. The SPI-bus is initialized whenever the chip enable line pin CE is LOW.

Table: Serial interface

Symbol	Function	Description
$\overline{CE}$	chip enable input; active LOW *	when HIGH, the interface is reset.
SCL	serial clock input	input may be higher than Vdd1.
SDA	serial data input	input may be higher than Vdd1; input data is sampled on the rising edge of SCL
SDO	serial data output	-

* The chip enable must NOT be wired permanently LOW.

Ultrachip Confidential

Ultrachip Confidential

Data transmission

The chip enable signal ($\overline{CE}$) is used to initialize data transmission. Each data transfer is a byte, with the MSB sent first. The first byte transmitted is the subaddress byte.

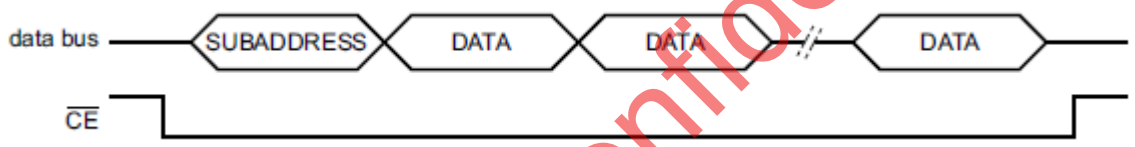

Figure 29. SPI-bus protocol - data transfer overview

The subaddress byte opens the communication with a read/write bit and a sub address. The subaddress is used to identify multiple devices on one SPI bus.

Table. Subaddress byte definition

Bit	Symbol	Description
7	R/$\overline{W}$	data read or write selection. 0b: write data, 1b: read data.
6	SA	sub address; other codes cause the device to ignore data transfer
5~0		(unused)

Figure 30 shows an example of an SPI data transfer.

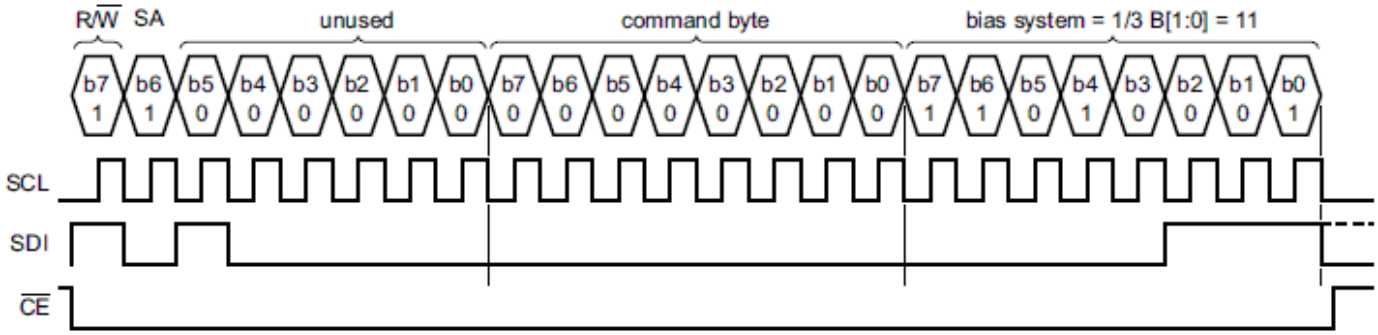

In this example, the bias system is set to 1⁄3. The transfer is terminated by CE returning to logic 1. After the last bit is transmitted, the state of the SDI/SDAIN line is not important.

Figure 30. SPI-bus example

For a temperature readout, the R/W bit must be logic 1. The next data byte following is provided by the UC1677 as shown in Figure 40.

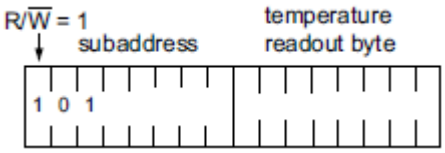

Figure 31. SPI-bus protocol - read example

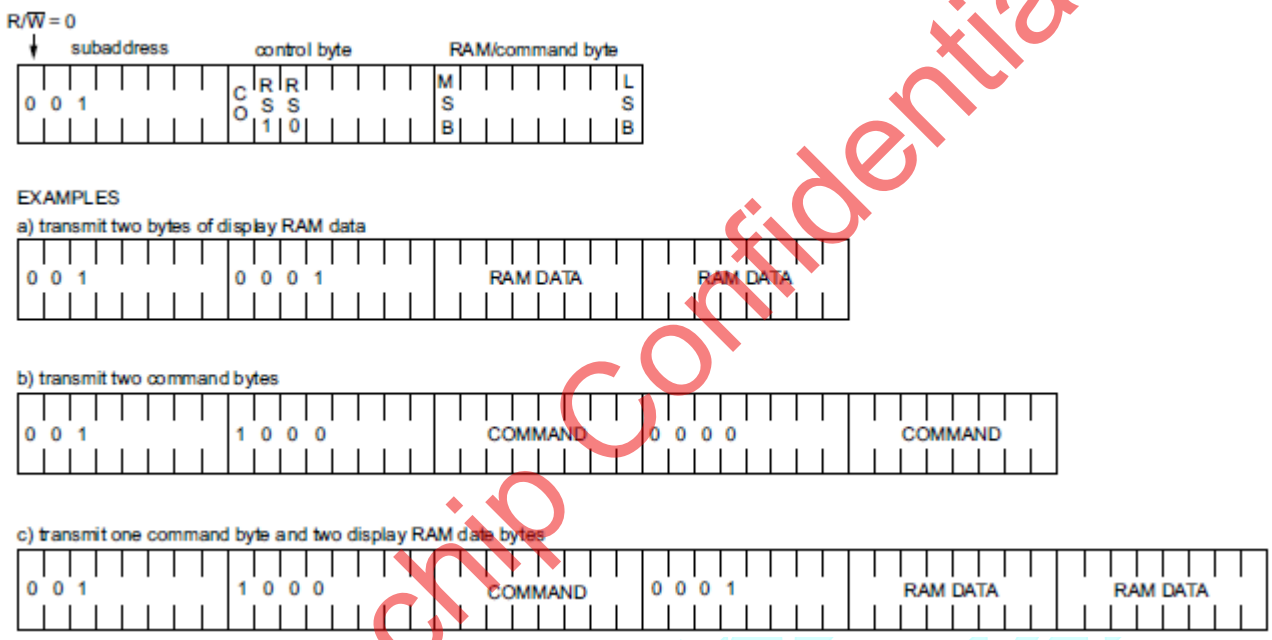

Data transfers are terminated by de-asserting CE (set CE to logic 1).

Figure 32. SPI-bus protocol - write example

Ultrachip Confidential
Preliminary Confidential

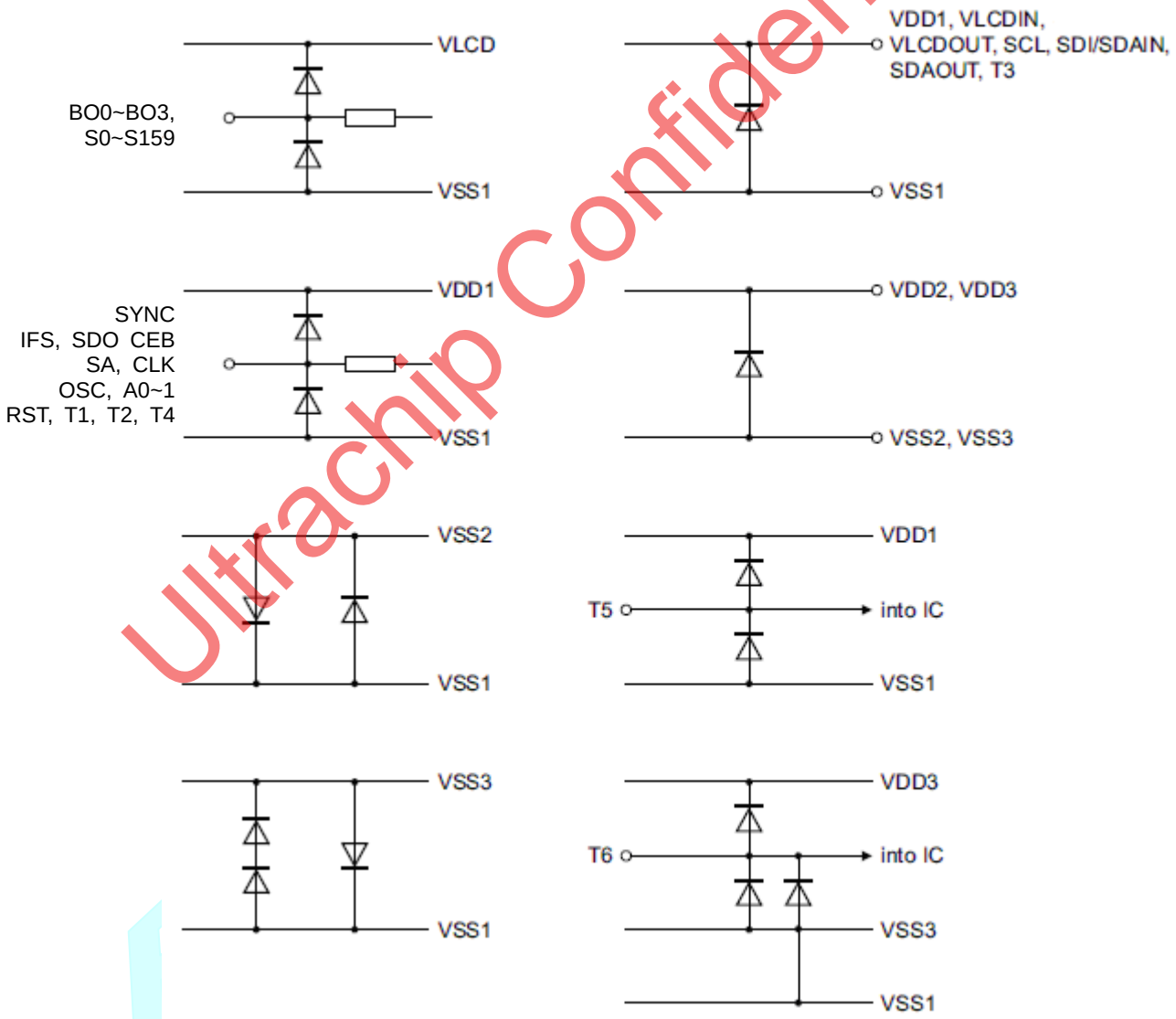

Figure 33. Device protection diagram

Ultrachip Confidential

Ultrachip Confidential
Preliminary Confidential

ABSOLUTE MAXIMUM RATING

In accordance with the Absolute Maximum Rating System (IEC 60134). [1]

Symbol	Parameter	Conditions	Min.	Max.	Unit
V_{DD1}	Supply voltage 1	analog and digital	–0.5	+6.5	V
V_{DD2}	Supply voltage 2	charge pump	–0.5	+6.5	V
V_{DD3}	Supply voltage 3	analog	–0.5	+6.5	V
I_{DD1}	Supply current 1	analog and digital	–50	+50	mA
I_{DD2}	Supply current 2	charge pump	–50	+50	mA
I_{DD3}	Supply current 3	analog	–50	+50	mA
V_{LCD_IN}	LCD supply voltage	external supply, input, output on pin V_{LCD}	–0.5	+12.4	V
V_{LCD_OUT}	LCD supply voltage	internal supply, output, input on pin V_{LCD}	–0.5	+12.4	V
$I_{DD(LCD)}$	LCD supply current		–50	+50	mA
Vi	Input voltage	on pins CLK, OSC, A1, A0, $\overline{RST}$, IFS, SCL, SDI, SA0, $\overline{CE}$, SYNC	–0.5	+6.5	V
Ii	Input current		–10	+10	mA
Vo	Output Voltage	on pins S0~S159, BO0~BO3	–0.5	+9.0	V
		on pins SDO, SA0, CLK, SYNC	–0.5	+6.5	V
Io	Output current		–10	+10	mA
Iss	Ground supply current		–50	+50	mA
Ptot	Total power dissipation		–	400	mW
P/out	Power dissipation per output		–	100	mW
V_{ESD}	Electrostatic Discharge Voltage	HBM		+/- 4500	V
		MM		+/- 250	V
Ilu	Latch-up Current			200	mA
t_{STG}	Storage temperature		-55	+125	^{o}C
t_{OPER}	Operating temperature	operating device	-40	+85	^{o}C

Note: Static voltages across the liquid crystal display (LCD) can build up when the LCD supply voltage (V_{LCD}) is ON while the IC supply voltage (V_{DD}) is OFF, or vice versa. This may cause unwanted display artifacts. To avoid such artifacts, V_{LCD} and V_{DD} must be applied or removed together.

[1] Stresses above the values listed may cause permanent damage to the device.
[2] The devices have to be stored at a temperature of +8 ^{o}C to +45 ^{o}C and humidity of 25% to 75%.

DC CHARACTERISTICS

$V_{DD1}=V_{DD2}=V_{DD3}=2.5V\sim5.5V$, $V_{SS1}=0V$, $V_{LCD}=4.0V\sim11.2V$, $T_{amb}=-40^{o}C\sim+85^{o}C$; unless otherwise specified.

Symbol	Parameter	Condition		Min.	Typ.	Max.	Unit
SUPPLY							
V_{DD1}	Supply voltage 1			2.5	–	5.5	V
V_{DD2}	Supply voltage 2			2.5	–	5.5	V
V_{DD3}	Supply voltage 3			2.5	–	5.5	V
V_{LCD}	LCD supply voltage	$V_{LCD} \geqslant V_{DD2}$	external supply	4.0	–	11.2	V
			internal supply	4.0	–	11.2	V
I_{DD1}	Supply current 1, on pin Vdd1	default condition after POR and initiallize command		–	–	70	uA
		display enabled; internal clock		–	–	–	
I_{DD2}	Supply current 2, on pin Vdd2	default condition after POR and initiallize command		–	–	70	uA
		display enabled; internal clock		–	–	–	
I_{DD3}	Supply current 3, on pin Vdd3	default condition after POR and initiallize command		–	–	70	uA
		display enabled; internal clock		–	–	–	
$I_{DD(LCD)}$	LCD supply current on pin Vlcd; external Vlcd=8V	display disabled		–	–	70	uA
		MUX 1:4; 1⁄3 bias; ffr = 75 Hz; RAM entirely filled with 1; frame inversion mode; display enabled; no display attached		–	–	–	
ACCURACY							
ΔV_{LCD}	LCD voltage variation	on pin V_{LCD}; internal V_{LCD}; V_{LCD}=8V; $t_{AMB}=25^{o}C$		(TBD)	8	(TBD)	V
Δf_{FR}	frame frequency variation	internal clock; f_{FR}=75Hz; $t_{AMB}=25^{o}C$		77	80	83	Hz
Δt_{MEAS}	measurement temperature variation	$t_{AMB}=25^{o}C$		22	25	28	^{o}C
OUTPUT RESISTANCE							
$R_{o(COM)}$	Output resistance on pin BO0~BO3	external V_{LCD}=11.2V		–	1.5	–	kΩ
$R_{o(S)}$	Output resistance on pin S0~S160	external V_{LCD}=11.2V		–	2.0	–	kΩ

Note:

[1] V_{DD1}=5V; $T_{AMB}=25^{o}C$
[2] V_{DD1}=5.5V; $T_{AMB}=85^{o}C$
[3] V_{DD3}=5V; $T_{AMB}=25^{o}C$
[4] V_{DD3}=5.5V; $T_{AMB}=85^{o}C$

Ultrachip Confidential
Preliminary Confidential

$V_{DD1}=V_{DD2}=V_{DD3}=2.5V\sim5.5V$, $V_{SS1}=0V$, $V_{LCD}=4.0V\sim11.2V$, Tamb=–40°C~+85°C; unless otherwise specified.

Symbol	Parameter	Condition	Min.	Typ.	Max.	Unit
LOGIC -- ON PINS CLK, OSC, A0, A1, SYNC0, SYNC1, $\overline{RST}$, IFS						
V_I	Input voltage		Vss1-0.5	–	V_{DD1}+0.5	V
V_{IL}	Input voltage – low		–	–	0.3 V_{DD1}	V
V_{IH}	Input voltage – high		0.7 V_{DD}	–	–	V
I_{LI}	Input leakage current	V_I=V_{DD1} or Vss1.	–	0	–	uA
LOGIC -- ON PINS CLK, SYNC0, SYNC1						
V_O	Output voltage		–0.5	–	V_{DD1}+0.5	V
V_{OH}	Output voltage – high		0.8 V_{DD1}	–	–	V
V_{OL}	Output voltage – low		–	–	0.2 V_{DD1}	V
I_{OH}	Output current – high	output source current, V_{OH}=4.6V, V_{DD1}=5V	1	–	–	mA
I_{OL}	Output current – low	output source current, V_{OL}=0.4V, V_{DD1}=5V	1	–	–	mA
I_{LO}	Output leakage current	V_O=V_{DD1} or Vss1	–	0	–	uA
I^2C BUS -- ON PINS SCL, SDI/SDAIN						
V_I	Input voltage		Vss1-0.5	–	5.5	V
V_{IL}	Input voltage – low		–	–	0.3 V_{DD1}	V
V_{IH}	Input voltage – high		0.7 V_{DD1}	–	–	V
I_{LI}	Input leadkage voltage	Vi=Vdd1 or Vss1	–	0	–	uA
I^2C BUS -- ON PIN SDAOUT						
V_O	output voltage		-0.5	–	+5.5	V
I_{OL}	Output current – low	output sink current; V_{OL}=0.4V	6	–	–	mA
I_{LI}	Input leakage current	V_I=V_{DD1} or Vss1.	–	0	–	uA
I_{LO}	Output leakage current	V_O=Vss1	–	0	–	uA
SPI BUS – ON PIN SCL, SDI/SDAIN, $\overline{CE}$						
V_I	Input voltage	on pins SCL, SDI/SDAIN	Vss1-0.5	–	5.5	V
		on pin $\overline{CE}$	Vss1-0.5	–	V_{DD1}+0.5	V
V_{IL}	Input voltage – low		–	–	0.3 V_{DD1}	V
V_{IH}	Input voltage – high		0.7 V_{DD1}	–	–	V
I_{LI}	Input leakage current	V_I=V_{DD1} or Vss1.	–	0	–	uA
SPI BUS – ON SDO						
V_O	Output voltage		–0.5	–	V_{DD1}+0.5	V
V_{OH}	Output voltage – high		0.8 V_{DD1}	–	–	V
V_{OL}	Output voltage – low		–	–	0.2 V_{DD1}	V
I_{OH}	Output current – high	output source current, V_{OH}=4.6V, V_{DD1}=5V	1	–	–	mA
I_{OL}	Output current – low	output source current, V_{OL}=0.4V, V_{DD1}=5V	1	–	–	mA
I_{LO}	Output leakage current	V_O=V_{DD1} or Vss1	–	0	–	uA

Ultrachip Confidential
Preliminary Confidential

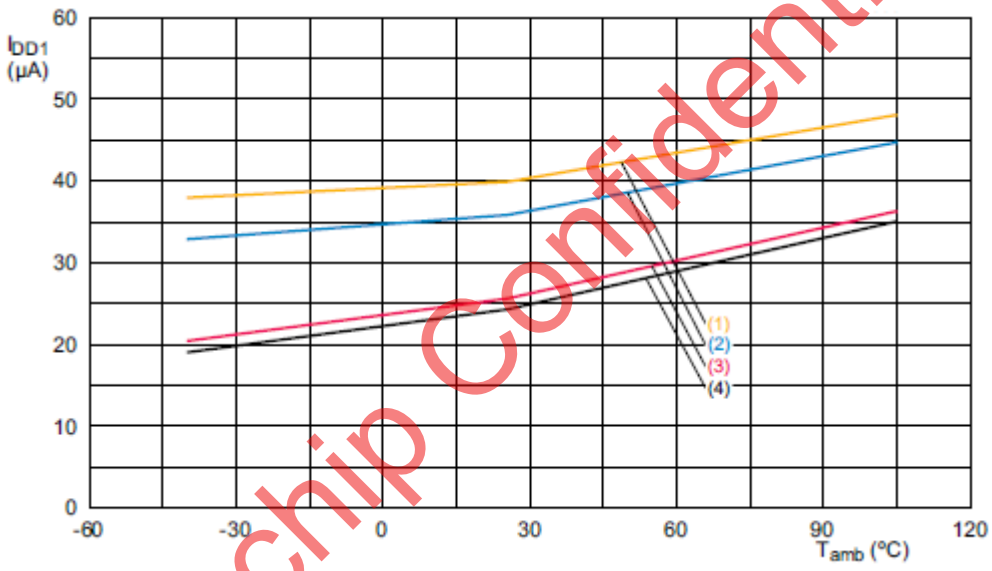

Default conditions after POR and initialization.
(1) VDD1 = 5.5 V.
(2) VDD1 = 5 V.
(3) VDD1 = 3 V.
(4) VDD1 = 2.5 V.

Figure 34. Typical IDD1 with respect to temperature

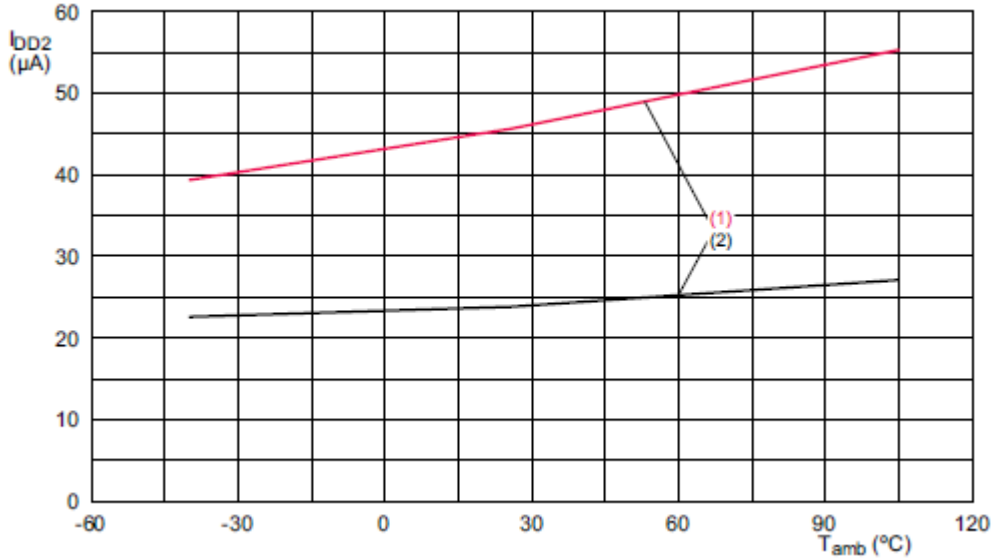

(1) VDD2 = 3 V; charge pump at VLCD = 3 x VDD2; VLCD = 8 V; CVLCD = 100 nF; display disabled.
(2) VDD2 = 5 V; charge pump at VLCD = 2 x VDD2; VLCD = 8 V; CVLCD = 100 nF; display disabled.

Figure 35. Typical IDD2 with respect to temperature

Ultrachip Confidential

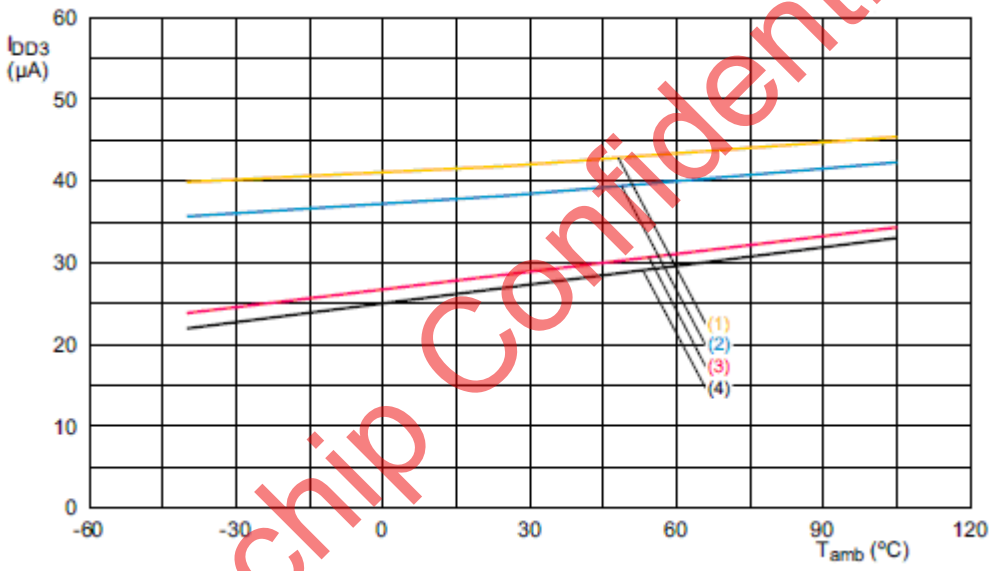

Default conditions after POR.
(1) VDD1 = 5.5 V.
(2) VDD1 = 5 V.
(3) VDD1 = 3 V.
(4) VDD1 = 2.5 V.

Figure 36. Typical IDD3 with respect to temperature

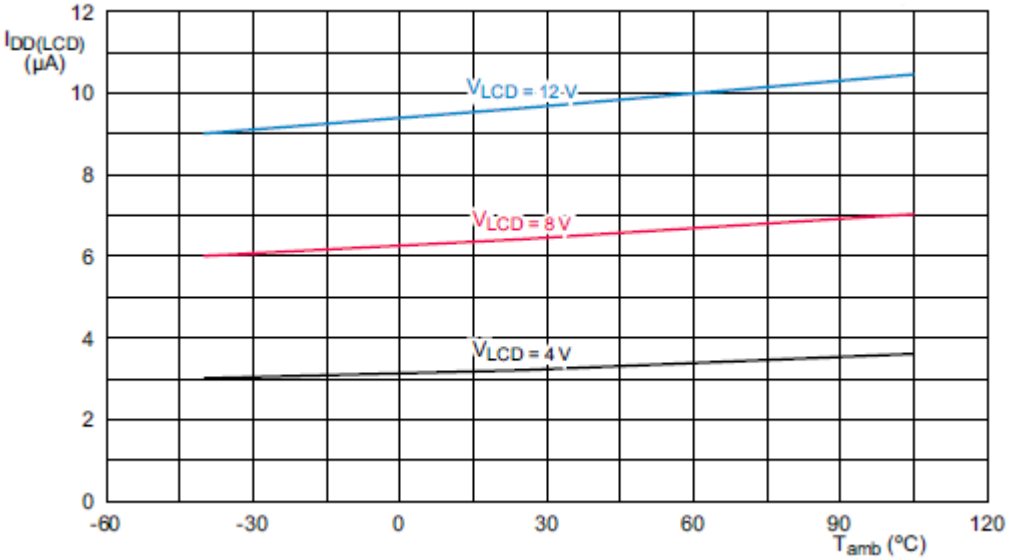

Conditions: External VLCD; display disabled.

Figure 37. Typical IDD(LCD) with respect to temperature

Ultrachip Confidential

Ultrachip Confidential

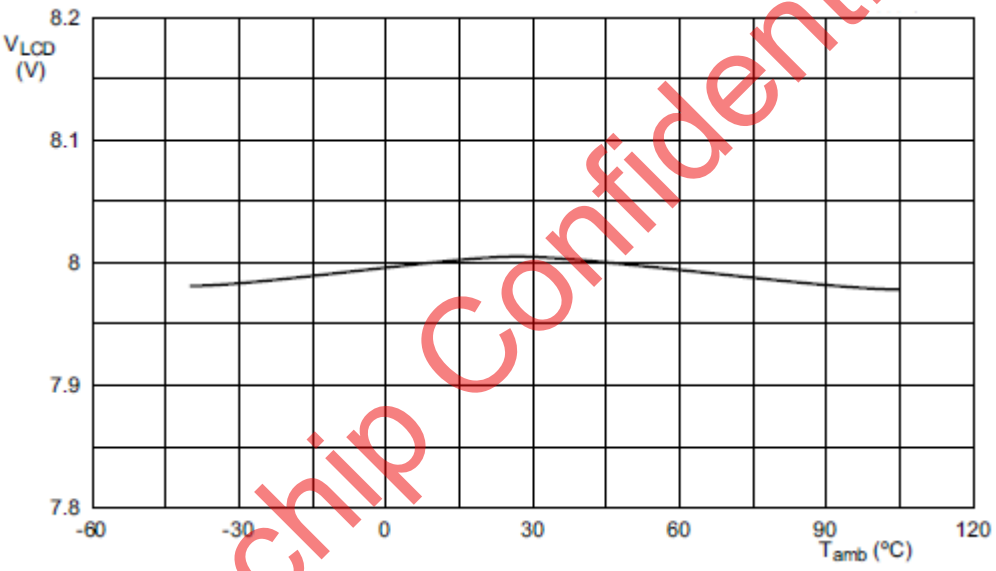

Conditions: VDD2 = 5 V; charge pump at VLCD = 2 x VDD2; VLCD = 8 V; V[7:0] = 134h; temperature compensation disabled.

Figure 38. Typical VLCD variation with respect to temperature

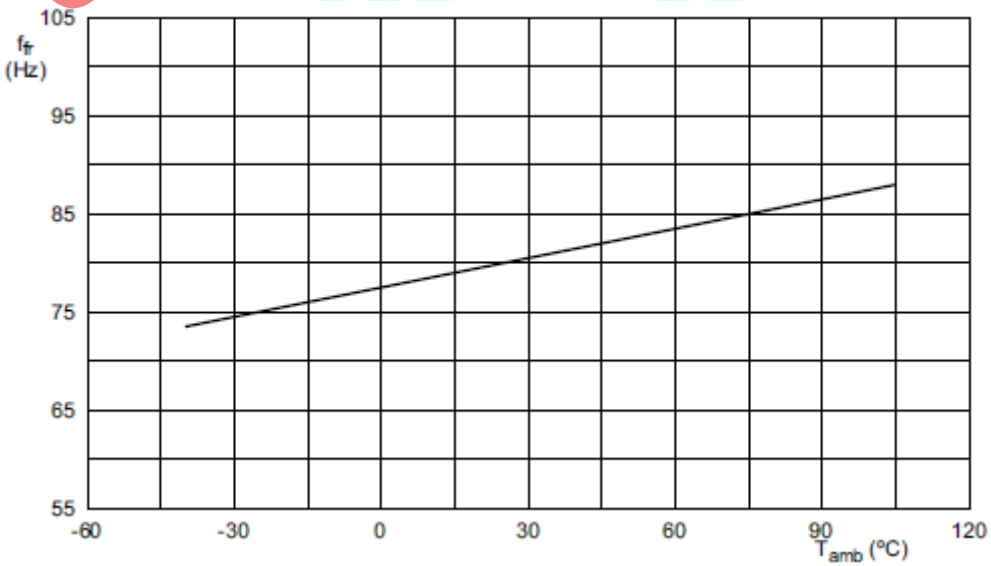

Conditions: frame frequency prescaler = 001; 75 Hz typical.

Figure 39. Typical frame frequency variation with respect to temperature

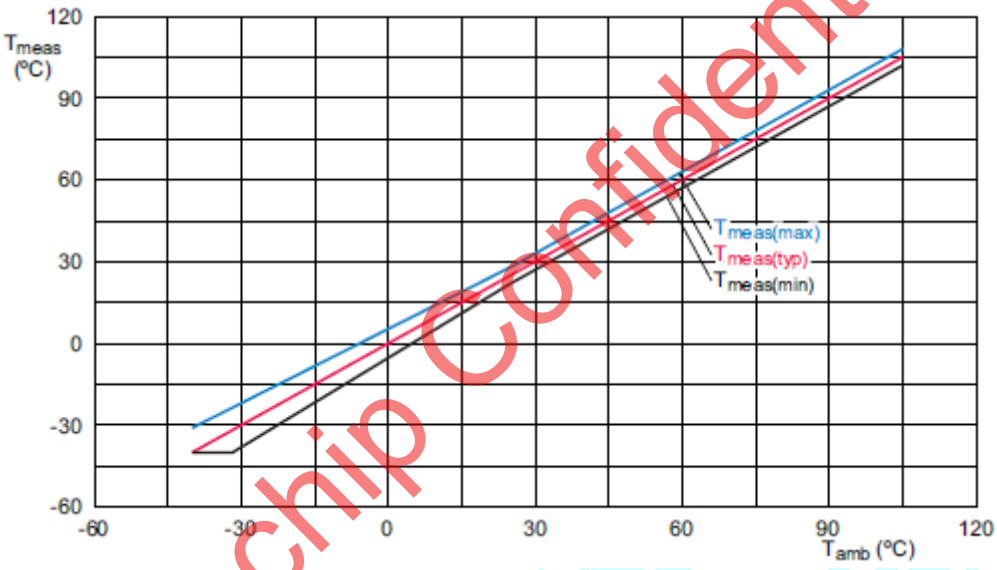

Figure 40. Measurement temperature variation with respect to temperature

Ultrachip Confidential
Preliminary Confidential

Table Static Characteristics

Symbol	Parameter	Conditions		Min.	Typ.	Max.	Unit
LCD OUTPUTS							
ΔVo	Output Voltage Variation	on pins BP0 to BP3, S0 to S159		-30	-	+30	mV
Ro	Output Resistance	Vlcd=5V	on pins BP0 to BP3	-	1.5	5	KΩ
			on pins S0 to S159	-	2.0	5	KΩ

[1] LCD outputs are open-circuit; inputs at VSS or VDD; I2C-bus inactive; VLCD = 8.0 V, VDD = 5.0 V and RAM written with all logic 1.

[2] External clock with 50 % duty factor.

[3] For typical values, see the Figure 54 below.

[4] For typical values, see the Figure 55 on the next page.

[5] Variation between any 2 backplanes on a given voltage level; static measured.

[6] Variation between any 2 segments on a given voltage level; static measured.

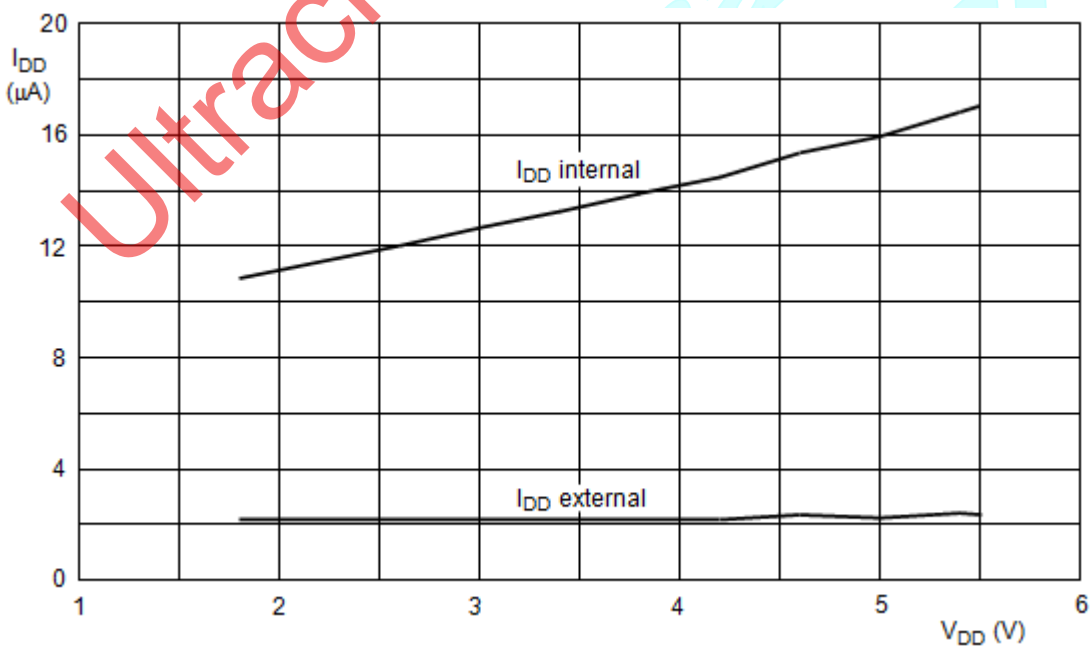

Tamb = 30 °C; 1:4 multiplex; VLCD = 8 V; all RAM written with logic 1; no display connected.

Figure 41. IDD with respect to Vdd

Ultrachip Confidential

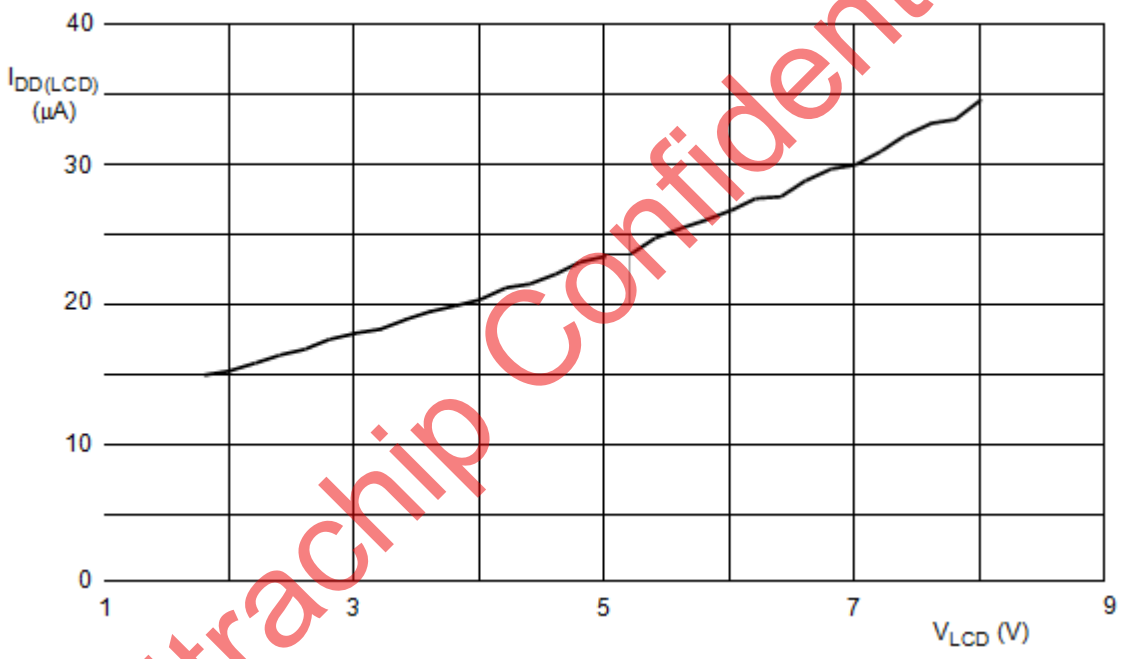

Tamb = 30 °C; 1:4 multiplex; all RAM written with logic 1; no display connected;
external clock with fclk = 1.800 kHz or fclk(ext) = 1.800 kHz.

Figure 42. IDD(LCD) with respect to VLCD

Ultrachip Confidential
Preliminary Confidential

AC CHARACTERISTICS

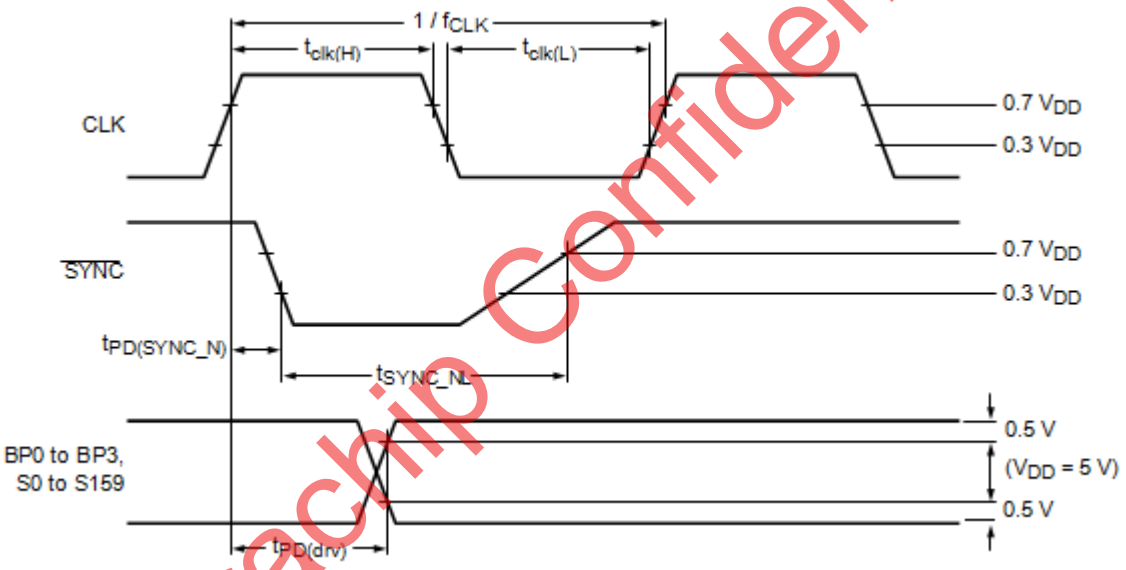

Figure 43: Driver Timing Waveform

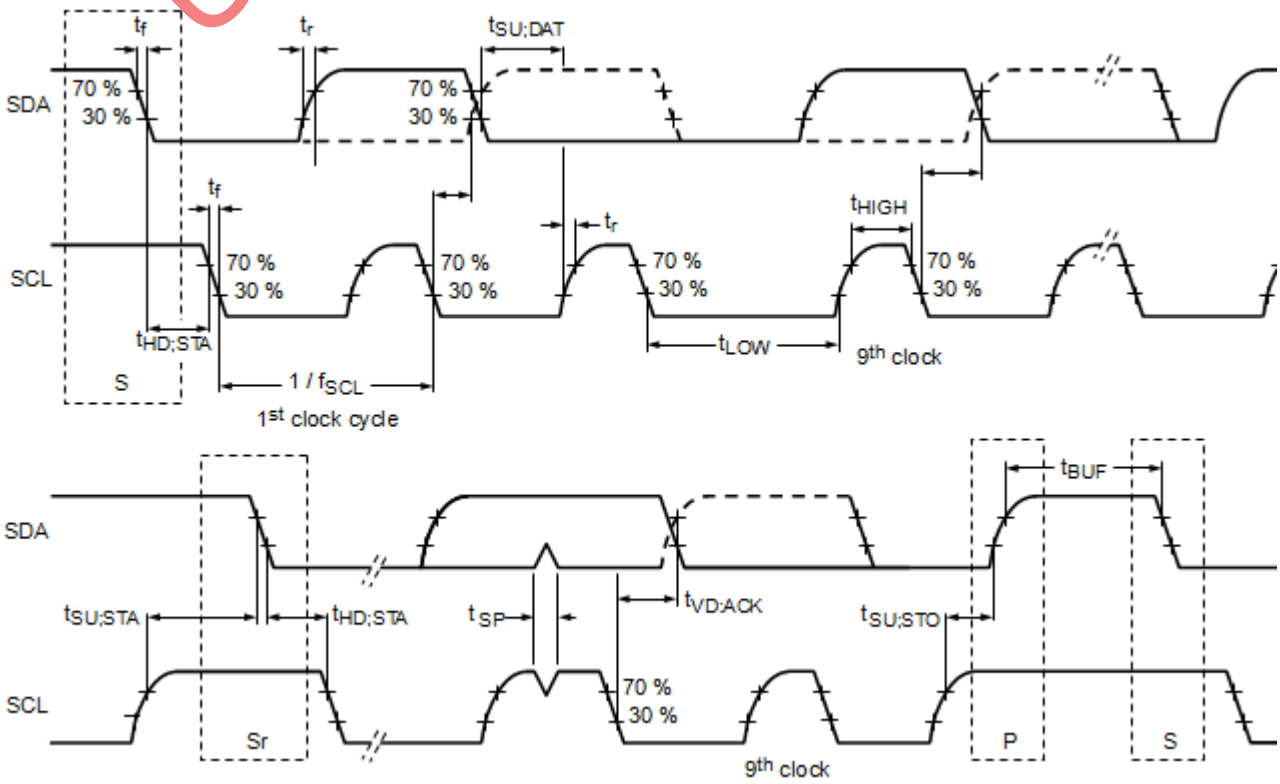

Figure 44: I²C Series Interface Characteristics

Ultrachip Confidential

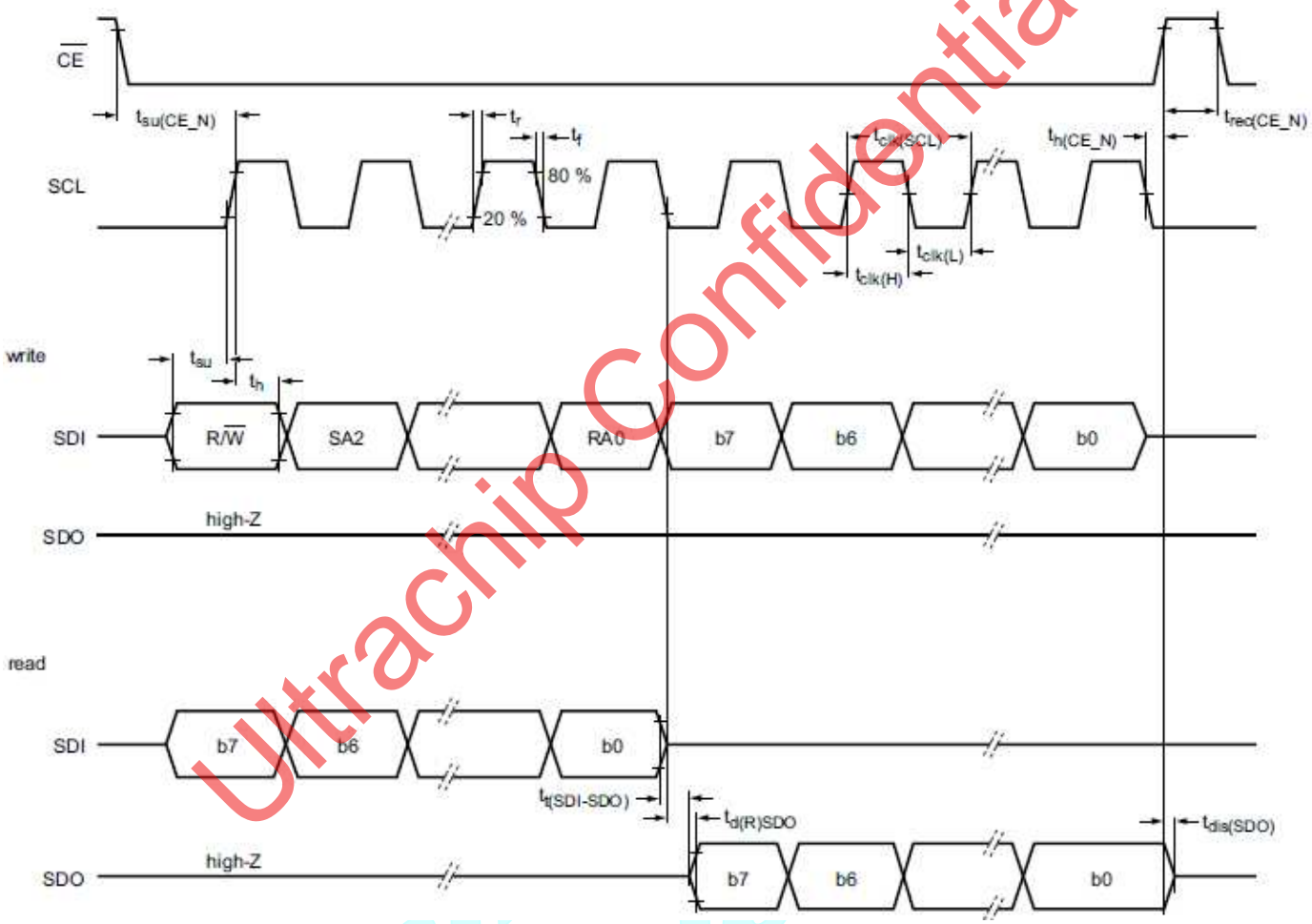

Figure 45: SPI-bus timing

Ultrachip Confidential

V_{DD}=2.5V~5.5V, Vss=0V, V_{LCD}=2.5V~11.2V, T_{AMB}= –30°C~+85°C; unless otherwise specified.

Symbol	Description	Condition	Min.	Typ.	Max.	Unit
f_{CLK}	Clock frequency	on pin CLK; V_{DD}=5V±0.5V [1][2][3]	1600	**1800**	2060	Hz
$f_{CLK(EXT)}$	External clock frequency	[4]	700	–	5000	Hz
$f_{CLK(H)}$	High-level clock time		100	–	–	uS
$f_{CLK(L)}$	Low-level clock time		100	–	–	uS
Δf_{FR}	Frame frequency	V_{DD}=5V±0.5V				%
		f_{FR}=75Hz, tamb=30°C	-3.9	–	+3.9	
		f_{FR}=70.3Hz, tamb=95°C	-5.2	–	+5.2	
		f_{FR}=80Hz, tamb=-40°C	-6.3	–	+7.3	
$t_{PD(SYNC_N)}$	$\overline{SYNC}$ propagation delay		–	30	–	nS
t_{SYNC_NL}	$\overline{SYNC}$ low time		100	–	–	uS
$t_{PD(DRV)}$	Driver propagation delay	V_{LCD}=5V	–	10	–	uS
I2C bus timing [5]						
f_{SCL}	SCL clock frequency		–	–	400	kHz
tbuf	Bus free time between STOP & START		1.3	–	–	uS
$t_{HD;STA}$	Hold time (repeated) START		0.6	–	–	uS
$t_{SU;STA}$	Set-up time for a repeated START		0.6	–	–	uS
$t_{VD;ACK}$	Data valid acknowledge time		–	–	0.9	uS
t_{LOW}	LOW period of the SCL clock		1.3	–	–	uS
t_{HIGH}	HIGH period of the SCL clock		0.6	–	–	uS
tf	Fall time of both SDA and SCL signals		–	–	0.3	uS
tr	Rise time of both SDA and SCL signals		–	–	0.3	uS
Cb	Capacitive load for each bus line		–	–	400	pF
$t_{SU;DAT}$	Data set-up time		100	–	–	nS
$t_{HD;DAT}$	Data hold time		0	–	–	nS
$t_{SU;STO}$	Set-up time from STOP		0.6	–	–	uS
tsp	Pulse width spikes that must be suppressed by the input filter		–	–	50	nS

Note: The rising time (tr) and the falling time (tf) are stipulated to be equal to or less than 15nS.

[1] Typical output duty cycle of 50 %.

[2] The corresponding frame frequency is $f_{fr} = \frac{fclk}{24}$.

[3] All timing values are valid within the operating supply voltage and ambient temperature range and are referenced to VIL and VIH with an input voltage swing of VSS to VDD.

[4] For I^2C-bus timings see the I^2C Figure on the previous page.

Ultrachip Confidential
Preliminary
Confidential

PHYSICAL DIMENSIONS

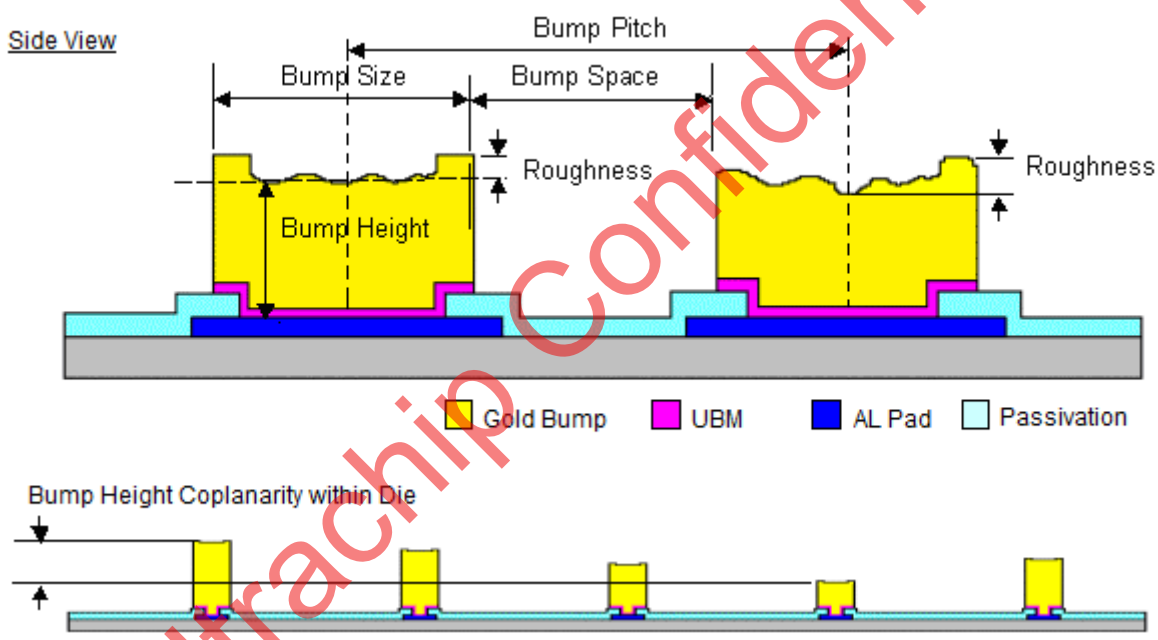

Die Size:	(6540μM ± 40μM) x (1103μM ± 40μM)
Die Thickness:	400μM ± 20μM (Polished)
Die TTV:	(D_{MAX} – D_{MIN}) within die ⩽ 2μM
Bump Height:	15μM ± 3μM
	(H_{MAX} – H_{MIN}) within die ⩽ 2μM
Hardness:	65Hv ± 15Hv
Shear:	⩾5g / mil^2
Bump Size:	(30μM ± 2μM) x (90μM ± 2μM)
Bump Area:	2700μM^2
Bump Pitch:	45μM
Bump Gap:	15μM ± 3μM
Coordinate origin:	Chip center
Pad reference:	Pad center

Ultrachip Confidential
Preliminary Confidential

Ultrachip Confidential
Preliminary Confidential

ALIGNMENT MARK INFORMATION

ALIGNMENT MARK POSITION:

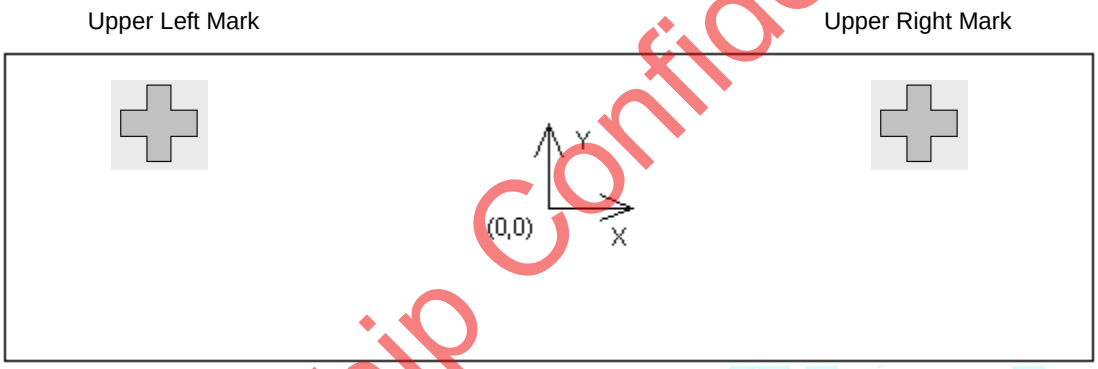

ALIGNMENT MARK SHAPES:

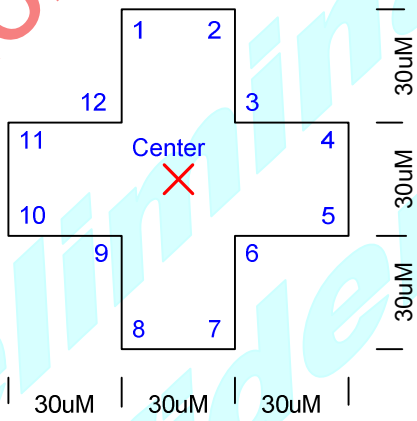

ALIGNMENT MARK COORDINATES:

Point	Upper Left mark		Upper Right mark	
	X	Y	X	Y
1	-2296.115	431.5	2576.505	431.5
2	-2266.115	431.5	2606.505	431.5
3	-2266.115	461.5	2606.505	461.5
4	-2236.115	461.5	2636.505	461.5
5	-2236.115	491.5	2636.505	491.5
6	-2266.115	491.5	2606.505	491.5
7	-2266.115	521.5	2606.505	521.5
8	-2296.115	521.5	2576.505	521.5
9	-2296.115	491.5	2576.505	491.5
10	-2326.115	491.5	2546.505	491.5
11	-2326.115	461.5	2546.505	461.5
12	-2296.115	461.5	2576.505	461.5
Center (X)	-2281.115	476.5	2591.505	476.5

PAD COORDINATES

#	Pad	X	Y	W	H
1	SDO	-1775.4	-481.5	30	90
2	SDO	-1730.4	-481.5	30	90
3	SDO	-1685.4	-481.5	30	90
4	SDA	-1640.4	-481.5	30	90
5	SDA	-1595.4	-481.5	30	90
6	SDA	-1550.4	-481.5	30	90
7	CLK_in_T	-1505.4	-481.5	30	90
8	ANA_T_O	-1460.4	-481.5	30	90
9	SCL	-1415.4	-481.5	30	90
10	SCL	-1370.4	-481.5	30	90
11	SCL	-1325.4	-481.5	30	90
12	CLK	-1280.4	-481.5	30	90
13	CEB	-1235.4	-481.5	30	90
14	VDD1	-1190.4	-481.5	30	90
15	VDD1	-1145.4	-481.5	30	90
16	VDD1	-1100.4	-481.5	30	90
17	VDD1	-1055.4	-481.5	30	90
18	VDD3	-1010.4	-481.5	30	90
19	VDD3	-965.4	-481.5	30	90
20	VDD3	-920.4	-481.5	30	90
21	VDD3	-875.4	-481.5	30	90
22	VDD3	-830.4	-481.5	30	90
23	VDD2	-785.4	-481.5	30	90
24	VDD2	-740.4	-481.5	30	90
25	VDD2	-695.4	-481.5	30	90
26	VDD2	-650.4	-481.5	30	90
27	VDD2	-605.4	-481.5	30	90
28	VDD2	-560.4	-481.5	30	90
29	VDD2	-515.4	-481.5	30	90
30	VDD2	-470.4	-481.5	30	90
31	T4	-425.4	-481.5	30	90
32	T5	-380.4	-481.5	30	90
33	T6	-335.4	-481.5	30	90
34	T7	-290.4	-481.5	30	90
35	T8	-245.4	-481.5	30	90
36	SYNC	-200.4	-481.5	30	90
37	IFS	-155.4	-481.5	30	90
38	OSC	-110.4	-481.5	30	90
39	T1	-65.4	-481.5	30	90
40	T2	-20.4	-481.5	30	90
41	T3	24.6	-481.5	30	90
42	T9	69.6	-481.5	30	90
43	T10	114.6	-481.5	30	90
44	RST	159.6	-481.5	30	90
45	A0	204.6	-481.5	30	90
46	A1	249.6	-481.5	30	90
47	SA0	294.6	-481.5	30	90
48	VSS1	339.6	-481.5	30	90
49	VSS1	384.6	-481.5	30	90
50	VSS1	429.6	-481.5	30	90
51	VSS1	474.6	-481.5	30	90
52	VSS1	519.6	-481.5	30	90
53	VSS1	564.6	-481.5	30	90
54	VSS3	609.6	-481.5	30	90
55	VSS3	654.6	-481.5	30	90
56	VSS3	699.6	-481.5	30	90
57	VSS3	744.6	-481.5	30	90

#	Pad	X	Y	W	H
58	VSS3	789.6	-481.5	30	90
59	VSS3	834.6	-481.5	30	90
60	VSS3	879.6	-481.5	30	90
61	VSS2	924.6	-481.5	30	90
62	VSS2	969.6	-481.5	30	90
63	VSS2	1014.6	-481.5	30	90
64	VSS2	1059.6	-481.5	30	90
65	VSS2	1104.6	-481.5	30	90
66	VSS2	1149.6	-481.5	30	90
67	VSS2	1194.6	-481.5	30	90
68	VSS2	1239.6	-481.5	30	90
69	VSS2	1284.6	-481.5	30	90
70	VSS2	1329.6	-481.5	30	90
71	VLCD_out	1374.6	-481.5	30	90
72	VLCD_out	1419.6	-481.5	30	90
73	VLCD_out	1464.6	-481.5	30	90
74	VLCD_out	1509.6	-481.5	30	90
75	VLCD_out	1554.6	-481.5	30	90
76	VLCD_in	1599.6	-481.5	30	90
77	VLCD_in	1644.6	-481.5	30	90
78	VLCD_in	1689.6	-481.5	30	90
79	VLCD_in	1734.6	-481.5	30	90
80	VLCD_in	1779.6	-481.5	30	90
81	BO<2>	1824.6	-481.5	30	90
82	BO<0>	1869.6	-481.5	30	90
83	SO<0>	1914.6	-481.5	30	90
84	SO<1>	1959.6	-481.5	30	90
85	SO<2>	2004.6	-481.5	30	90
86	SO<3>	2049.6	-481.5	30	90
87	SO<4>	2094.6	-481.5	30	90
88	SO<5>	2139.6	-481.5	30	90
89	SO<6>	2184.6	-481.5	30	90
90	SO<7>	2229.6	-481.5	30	90
91	SO<8>	2274.6	-481.5	30	90
92	SO<9>	2319.6	-481.5	30	90
93	SO<10>	2364.6	-481.5	30	90
94	SO<11>	2409.6	-481.5	30	90
95	SO<12>	2454.6	-481.5	30	90
96	SO<13>	2499.6	-481.5	30	90
97	SO<14>	2544.6	-481.5	30	90
98	SO<15>	2589.6	-481.5	30	90
99	SO<16>	2634.6	-481.5	30	90
100	SO<17>	2679.6	-481.5	30	90
101	SO<18>	2724.6	-481.5	30	90
102	SO<19>	2769.6	-481.5	30	90
103	SO<20>	2814.6	-481.5	30	90
104	SO<21>	2859.6	-481.5	30	90
105	SO<22>	2904.6	-481.5	30	90
106	SO<23>	2949.6	-481.5	30	90
107	SO<24>	2994.6	-481.5	30	90
108	SO<25>	3039.6	-481.5	30	90
109	SO<26>	3084.6	-481.5	30	90
110	SO<27>	3129.6	-481.5	30	90
111	SO<28>	3174.6	-481.5	30	90
112	DUMMY	3175.5	481.5	30	90
113	DUMMY	3130.5	481.5	30	90
114	SO<29>	3085.5	481.5	30	90

Ultrachip Confidential

#	Pad	X	Y	W	H
115	SO<30>	3040.5	481.5	30	90
116	SO<31>	2995.5	481.5	30	90
117	SO<32>	2950.5	481.5	30	90
118	SO<33>	2905.5	481.5	30	90
119	SO<34>	2860.5	481.5	30	90
120	SO<35>	2815.5	481.5	30	90
121	SO<36>	2770.5	481.5	30	90
122	SO<37>	2725.5	481.5	30	90
123	SO<38>	2460	481.5	30	90
124	SO<39>	2415	481.5	30	90
125	SO<40>	2370	481.5	30	90
126	SO<41>	2325	481.5	30	90
127	SO<42>	2280	481.5	30	90
128	SO<43>	2235	481.5	30	90
129	SO<44>	2190	481.5	30	90
130	SO<45>	2145	481.5	30	90
131	SO<46>	2100	481.5	30	90
132	SO<47>	2055	481.5	30	90
133	SO<48>	1762.5	481.5	30	90
134	SO<49>	1717.5	481.5	30	90
135	SO<50>	1672.5	481.5	30	90
136	SO<51>	1627.5	481.5	30	90
137	SO<52>	1582.5	481.5	30	90
138	SO<53>	1537.5	481.5	30	90
139	SO<54>	1492.5	481.5	30	90
140	SO<55>	1447.5	481.5	30	90
141	SO<56>	1402.5	481.5	30	90
142	SO<57>	1357.5	481.5	30	90
143	SO<58>	1312.5	481.5	30	90
144	SO<59>	1267.5	481.5	30	90
145	SO<60>	1222.5	481.5	30	90
146	SO<61>	1177.5	481.5	30	90
147	SO<62>	1132.5	481.5	30	90
148	SO<63>	1087.5	481.5	30	90
149	SO<64>	1042.5	481.5	30	90
150	SO<65>	997.5	481.5	30	90
151	SO<66>	732	481.5	30	90
152	SO<67>	687	481.5	30	90
153	SO<68>	642	481.5	30	90
154	SO<69>	597	481.5	30	90
155	SO<70>	552	481.5	30	90
156	SO<71>	507	481.5	30	90
157	SO<72>	462	481.5	30	90
158	SO<73>	417	481.5	30	90
159	SO<74>	372	481.5	30	90
160	SO<75>	327	481.5	30	90
161	SO<76>	282	481.5	30	90
162	SO<77>	237	481.5	30	90
163	SO<78>	192	481.5	30	90
164	SO<79>	147	481.5	30	90
165	BO<0>	68.6	481.5	30	90
166	BO<2>	23.6	481.5	30	90
167	BO<1>	-21.4	481.5	30	90
168	BO<3>	-66.4	481.5	30	90
169	SO<80>	-331.9	481.5	30	90
170	SO<81>	-376.9	481.5	30	90
171	SO<82>	-421.9	481.5	30	90
172	SO<83>	-466.9	481.5	30	90
173	SO<84>	-511.9	481.5	30	90

#	Pad	X	Y	W	H
174	SO<85>	-556.9	481.5	30	90
175	SO<86>	-601.9	481.5	30	90
176	SO<87>	-646.9	481.5	30	90
177	SO<88>	-691.9	481.5	30	90
178	SO<89>	-736.9	481.5	30	90
179	SO<90>	-781.9	481.5	30	90
180	SO<91>	-826.9	481.5	30	90
181	SO<92>	-871.9	481.5	30	90
182	SO<93>	-916.9	481.5	30	90
183	SO<94>	-961.9	481.5	30	90
184	SO<95>	-1006.9	481.5	30	90
185	SO<96>	-1051.9	481.5	30	90
186	SO<97>	-1096.9	481.5	30	90
187	SO<98>	-1362.4	481.5	30	90
188	SO<99>	-1407.4	481.5	30	90
189	SO<100>	-1452.4	481.5	30	90
190	SO<101>	-1497.4	481.5	30	90
191	SO<102>	-1542.4	481.5	30	90
192	SO<103>	-1587.4	481.5	30	90
193	SO<104>	-1632.4	481.5	30	90
194	SO<105>	-1677.4	481.5	30	90
195	SO<106>	-1722.4	481.5	30	90
196	SO<107>	-1767.4	481.5	30	90
197	SO<108>	-1812.4	481.5	30	90
198	SO<109>	-1857.4	481.5	30	90
199	SO<110>	-1902.4	481.5	30	90
200	SO<111>	-1947.4	481.5	30	90
201	SO<112>	-1992.4	481.5	30	90
202	SO<113>	-2037.4	481.5	30	90
203	SO<114>	-2082.4	481.5	30	90
204	SO<115>	-2127.4	481.5	30	90
205	SO<116>	-2419.9	481.5	30	90
206	SO<117>	-2464.9	481.5	30	90
207	SO<118>	-2509.9	481.5	30	90
208	SO<119>	-2554.9	481.5	30	90
209	SO<120>	-2599.9	481.5	30	90
210	SO<121>	-2644.9	481.5	30	90
211	SO<122>	-2689.9	481.5	30	90
212	SO<123>	-2734.9	481.5	30	90
213	SO<124>	-2779.9	481.5	30	90
214	SO<125>	-2824.9	481.5	30	90
215	SO<126>	-2869.9	481.5	30	90
216	SO<127>	-2914.9	481.5	30	90
217	SO<128>	-2959.9	481.5	30	90
218	SO<129>	-3004.9	481.5	30	90
219	SO<130>	-3049.9	481.5	30	90
220	DUMMY	-3094.9	481.5	30	90
221	DUMMY	-3139.9	481.5	30	90
222	SO<131>	-3170.4	-481.5	30	90
223	SO<132>	-3125.4	-481.5	30	90
224	SO<133>	-3080.4	-481.5	30	90
225	SO<134>	-3035.4	-481.5	30	90
226	SO<135>	-2990.4	-481.5	30	90
227	SO<136>	-2945.4	-481.5	30	90
228	SO<137>	-2900.4	-481.5	30	90
229	SO<138>	-2855.4	-481.5	30	90
230	SO<139>	-2810.4	-481.5	30	90
231	SO<140>	-2765.4	-481.5	30	90
232	SO<141>	-2720.4	-481.5	30	90

Ultrachip Confidential

#	Pad	X	Y	W	H
233	SO<142>	-2675.4	-481.5	30	90
234	SO<143>	-2630.4	-481.5	30	90
235	SO<144>	-2585.4	-481.5	30	90
236	SO<145>	-2540.4	-481.5	30	90
237	SO<146>	-2495.4	-481.5	30	90
238	SO<147>	-2450.4	-481.5	30	90
239	SO<148>	-2405.4	-481.5	30	90
240	SO<149>	-2360.4	-481.5	30	90
241	SO<150>	-2315.4	-481.5	30	90
242	SO<151>	-2270.4	-481.5	30	90
243	SO<152>	-2225.4	-481.5	30	90

#	Pad	X	Y	W	H
244	SO<153>	-2180.4	-481.5	30	90
245	SO<154>	-2135.4	-481.5	30	90
246	SO<155>	-2090.4	-481.5	30	90
247	SO<156>	-2045.4	-481.5	30	90
248	SO<157>	-2000.4	-481.5	30	90
249	SO<158>	-1955.4	-481.5	30	90
250	SO<159>	-1910.4	-481.5	30	90
251	BO<3>	-1865.4	-481.5	30	90
252	BO<1>	-1820.4	-481.5	30	90

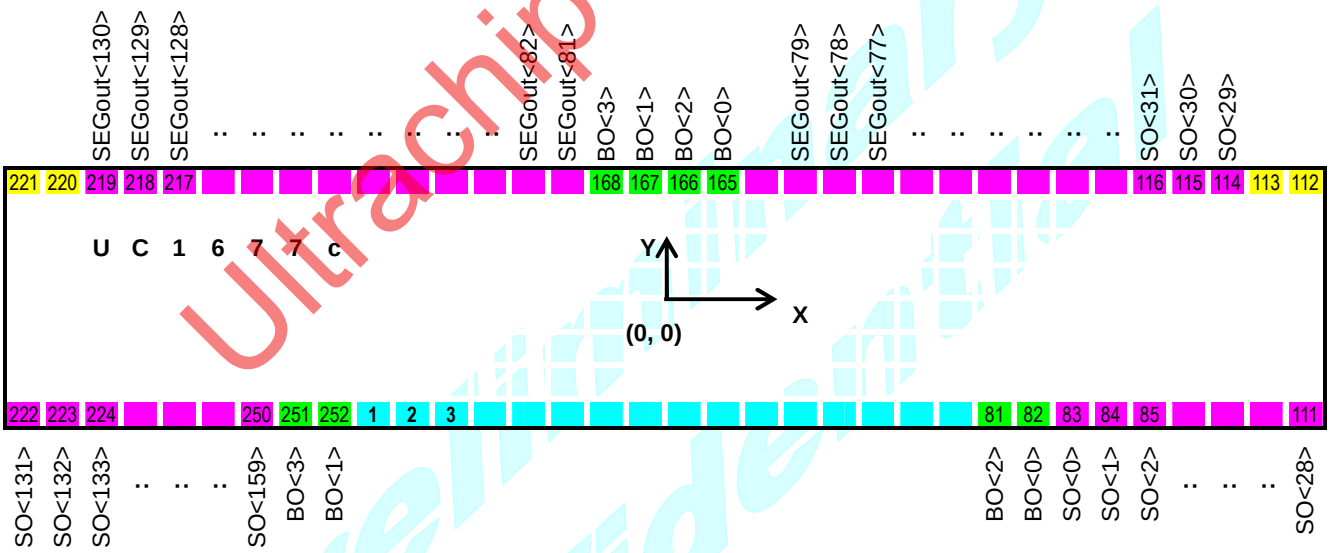

Ultrachip Confidential
Preliminary Confidential

TRAY INFORMATION

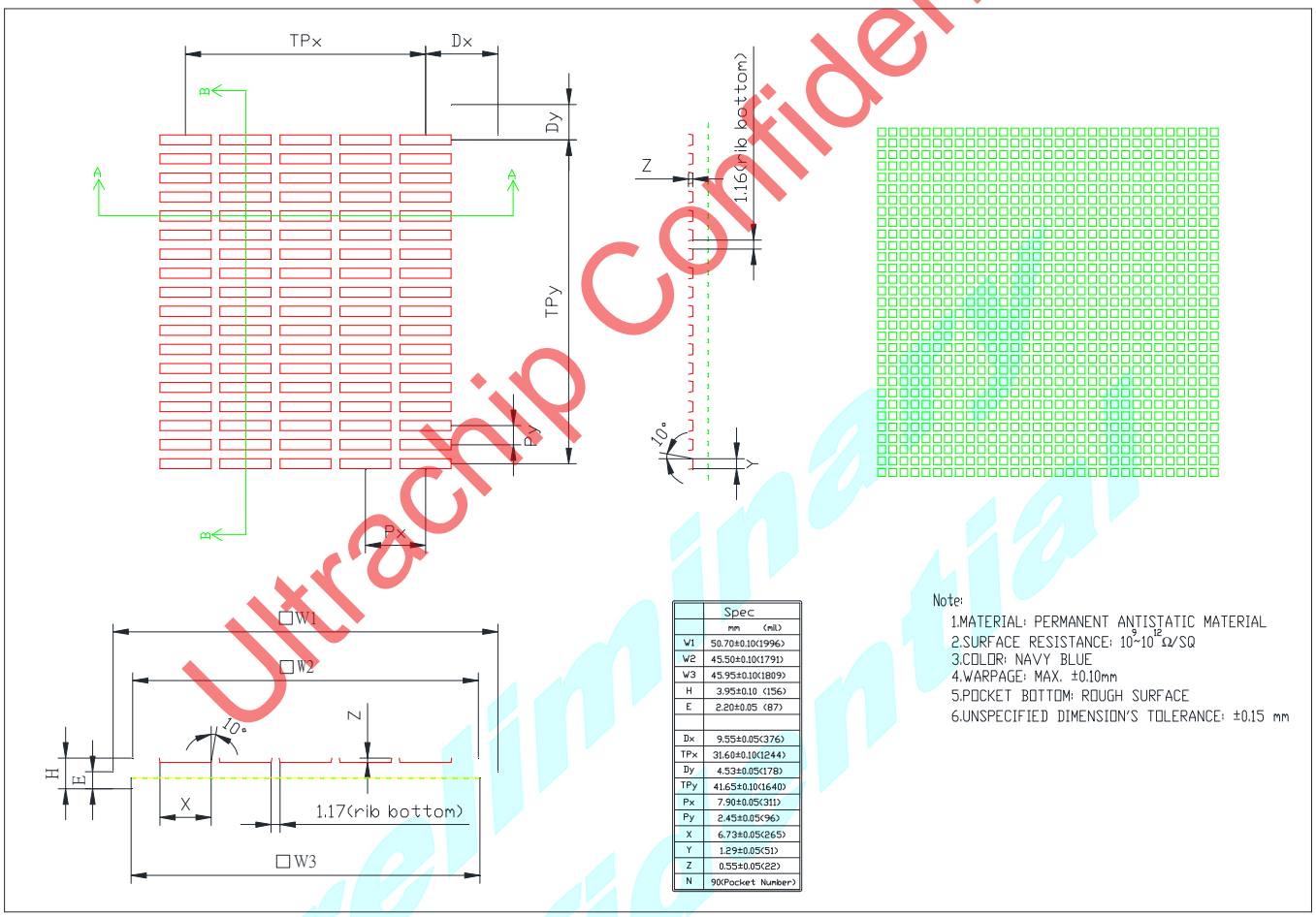

	Spec mm (mil)
W1	50.70±0.10(1996)
W2	45.50±0.10(1791)
W3	45.95±0.10(1809)
H	3.95±0.10 (156)
E	2.20±0.05 (87)
Dx	9.55±0.05(376)
TPx	31.60±0.10(1244)
Dy	4.53±0.05(178)
TPy	41.65±0.10(1640)
Px	7.90±0.05(311)
Py	2.45±0.05(96)
X	6.73±0.05(265)
Y	1.29±0.05(51)
Z	0.55±0.05(22)
N	90(Pocket Number)

Ultrachip Confidential
Preliminary Confidential