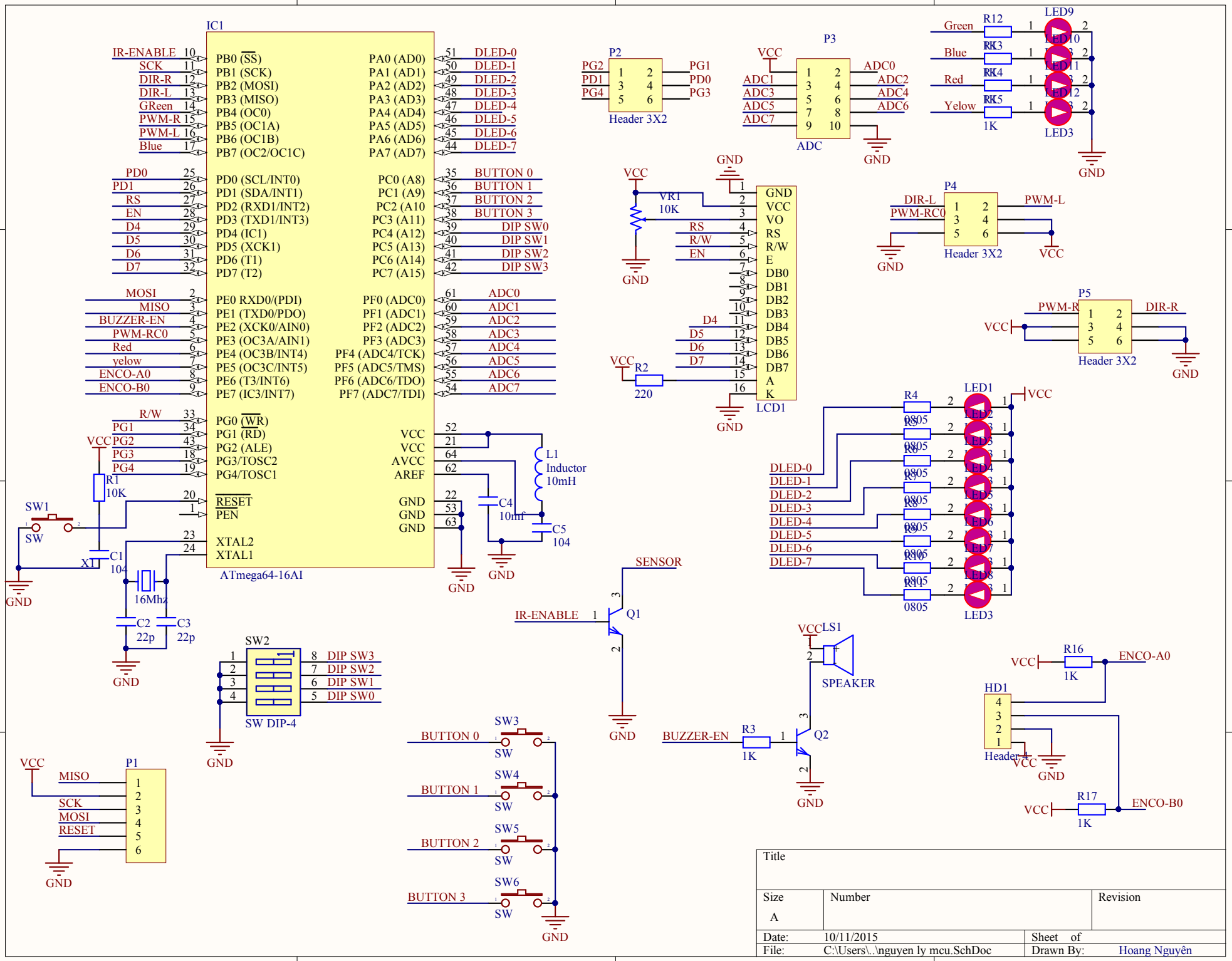
IC1
ATmega64-16AI
IR-ENABLE
SCK
DIR-R
DIR-L
GReen
PWM-R
PWM-L
Blue
PD0
PD1
RS
EN
D4
D5
D6
D7
MOSI
MISO
BUZZER-EN
PWM-RC0
Red
yelow
ENCO-A0
ENCO-B0
R/W
PG1
PG2
PG3
PG4
RESET
PEN
XTAL2
XTAL1
PB0 (SS)
PB1 (SCK)
PB2 (MOSI)
PB3 (MISO)
PB4 (OC0)
PB5 (OC1A)
PB6 (OC1B)
PB7 (OC2/OC1C)
PD0 (SCL/INT0)
PD1 (SDA/INT1)
PD2 (RXD1/INT2)
PD3 (TXD1/INT3)
PD4 (IC1)
PD5 (XCK1)
PD6 (T1)
PD7 (T2)
PE0 RXD0/(PDI)
PE1 (TXD0/PDO)
PE2 (XCK0/AIN0)
PE3 (OC3A/AIN1)
PE4 (OC3B/INT4)
PE5 (OC3C/INT5)
PE6 (T3/INT6)
PE7 (IC3/INT7)
PG0 (WR)
PG1 (RD)
PG2 (ALE)
PG3/TOSC2
PG4/TOSC1
VCC
AVCC
AREF
GND
PA0 (AD0)
PA1 (AD1)
PA2 (AD2)
PA3 (AD3)
PA4 (AD4)
PA5 (AD5)
PA6 (AD6)
PA7 (AD7)
PC0 (A8)
PC1 (A9)
PC2 (A10
PC3 (A11)
PC4 (A12)
PC5 (A13)
PC6 (A14)
PC7 (A15)
PF0 (ADC0)
PF1 (ADC1)
PF2 (ADC2)
PF3 (ADC3)
PF4 (ADC4/TCK)
PF5 (ADC5/TMS)
PF6 (ADC6/TDO)
PF7 (ADC7/TDI)
DLED-0
DLED-1
DLED-2
DLED-3
DLED-4
DLED-5
DLED-6
DLED-7
BUTTON 0
BUTTON 1
BUTTON 2
BUTTON 3
DIP SW0
DIP SW1
DIP SW2
DIP SW3
ADC0
ADC1
ADC2
ADC3
ADC4
ADC5
ADC6
ADC7
SW1
SW
R1
10K
C1
104
XT1
16Mhz
C2
22p
C3
22p
L1
Inductor
10mH
C4
10mf
C5
104
P2
Header 3X2
PG2
PD1
PG4
PG1
PD0
PG3
P3
ADC
ADC1
ADC3
ADC5
ADC7
ADC0
ADC2
ADC4
ADC6
LED9
LED10
LED11
LED12
LED3
R12
R13
R14
R15
1K
VR1
10K
R2
220
LCD1
GND
VCC
VO
RS
R/W
E
DB0
DB1
DB2
DB3
DB4
DB5
DB6
DB7
A
K
P4
DIR-L
PWM-RC0
PWM-L
Header 3X2
P5
PWM-R
DIR-R
Header 3X2
LED1
LED2
LED3
LED4
LED5
LED6
LED7
LED8
R4
R5
R6
R7
R8
R9
R10
R11
0805
SENSOR
Q1
IR-ENABLE
LS1
SPEAKER
Q2
BUZZER-EN
R3
1K
R16
R17
ENCO-A0
ENCO-B0
HD1
Header 4
SW2
SW DIP-4
SW3
SW4
SW5
SW6
P1
MISO
SCK
MOSI
RESET
Title
Size
A
Number
Revision
Date: 10/11/2015
Sheet of
File: C:\Users\..\nguyen ly mcu.SchDoc
Drawn By: Hoang Nguyên