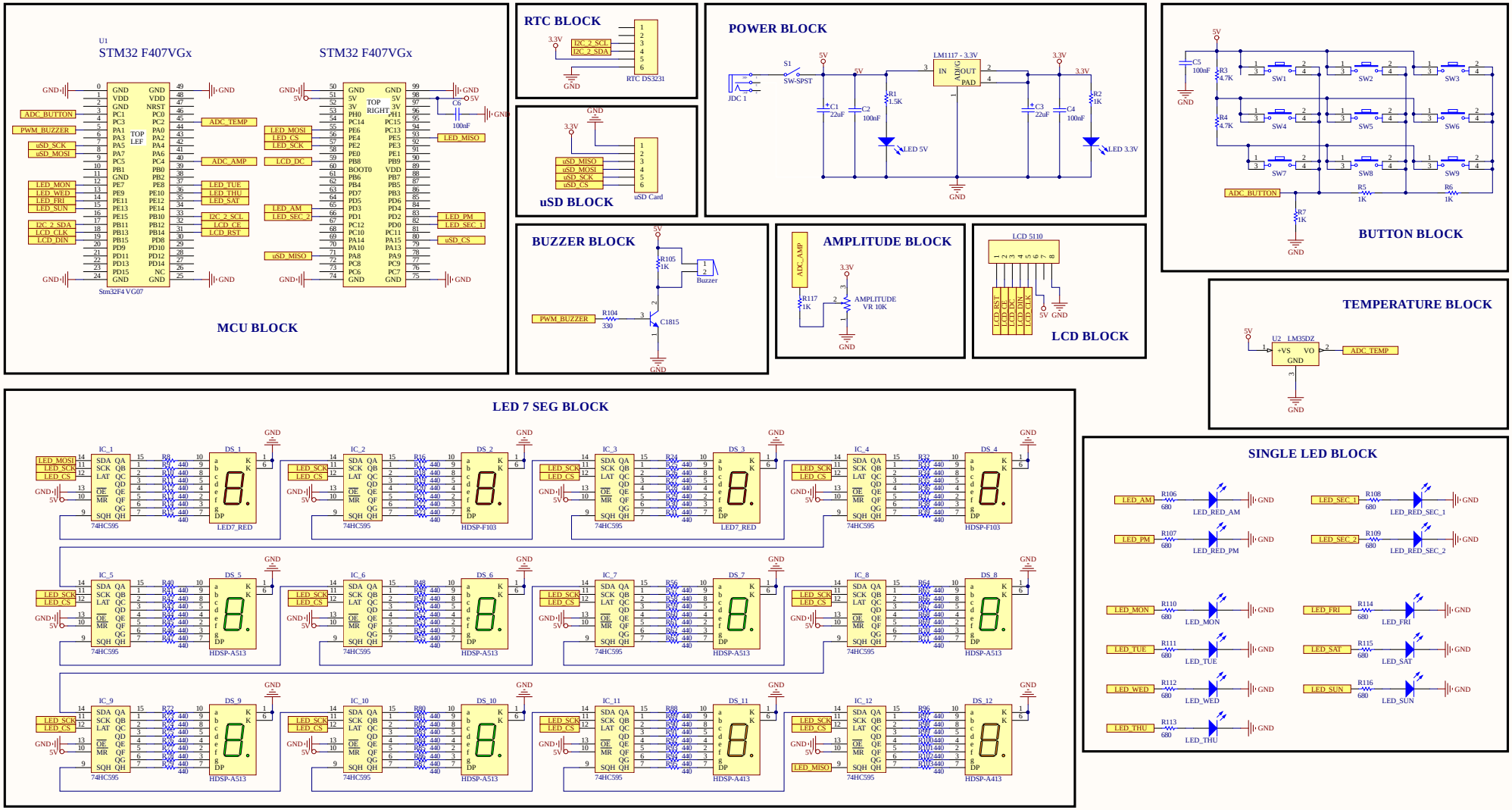

Title		
Size C	Number	Revision
Date: 11/29/2018	Sheet of	
File: C:\Users\..\Embedded.SchDoc	Drawn By:	