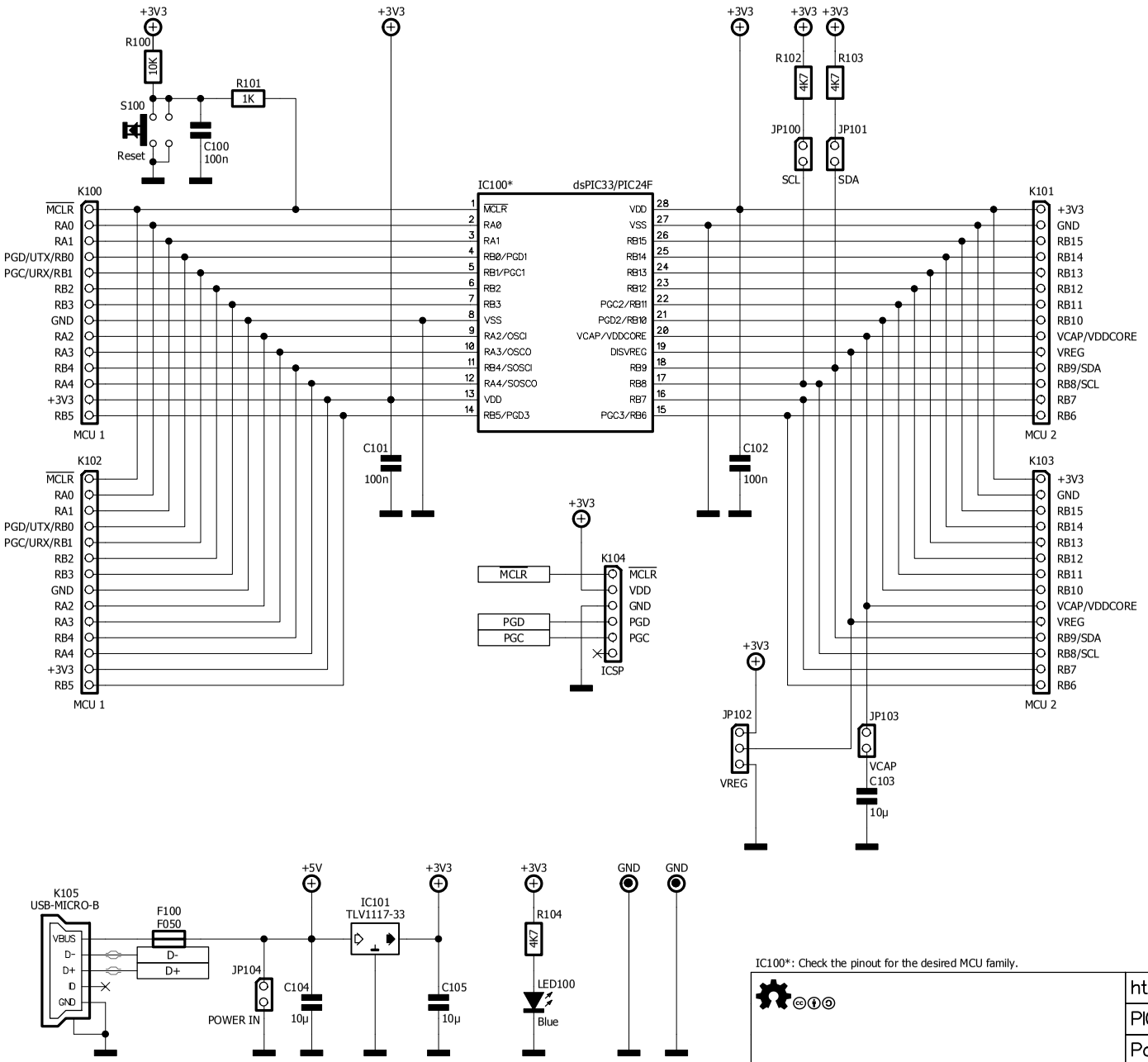


IC100*: Check the pinout for the desired MCU family.

http://creativecommons.org/licenses/by-sa/4.0/

| | | |
|---|---|---|
| http://www.tronix.io/ | | |
| PIC16-Bit Mini Trainer | | |
| Power and MCU | | |
| Sheet : 1/2 | 11/2020 | Rev.A |

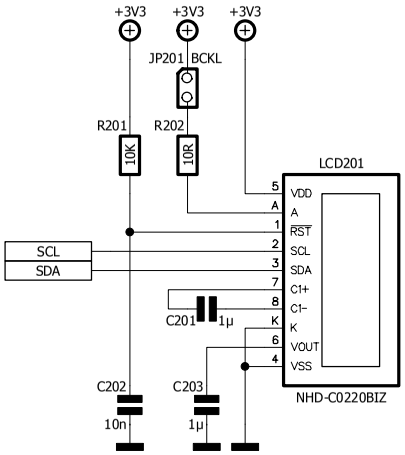


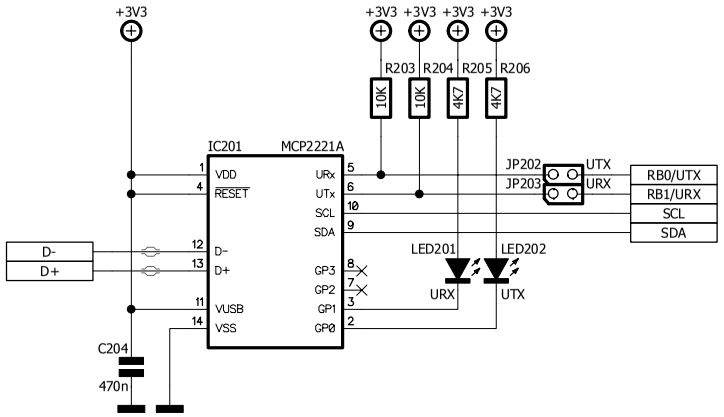


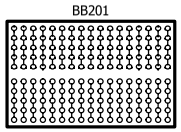


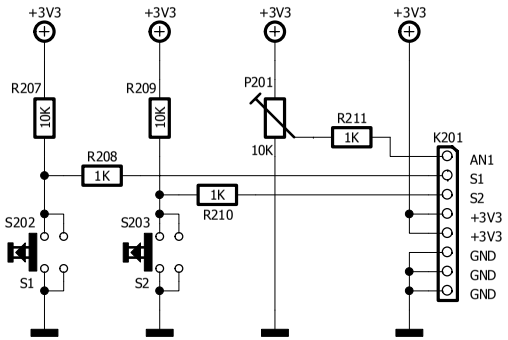


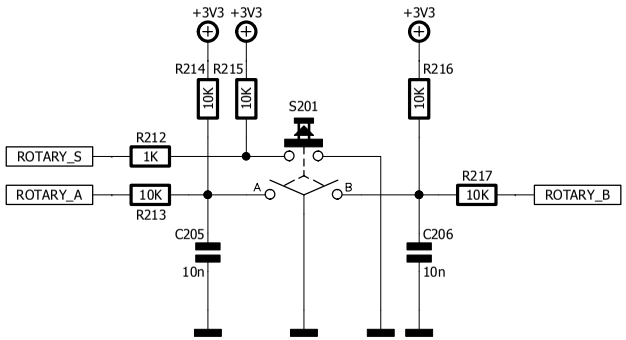


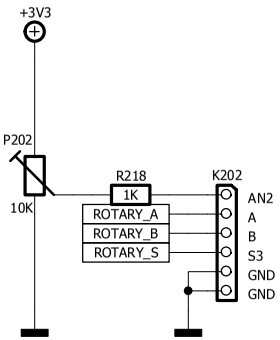


http://creativecommons.org/licenses/by-sa/4.0/

| | | |
|---|---|---|
| http://www.tronix.io/ | | |
| PIC16-Bit Mini Trainer | | |
| HID | | |
| Sheet : 2/2 | 11/2020 | Rev.A |