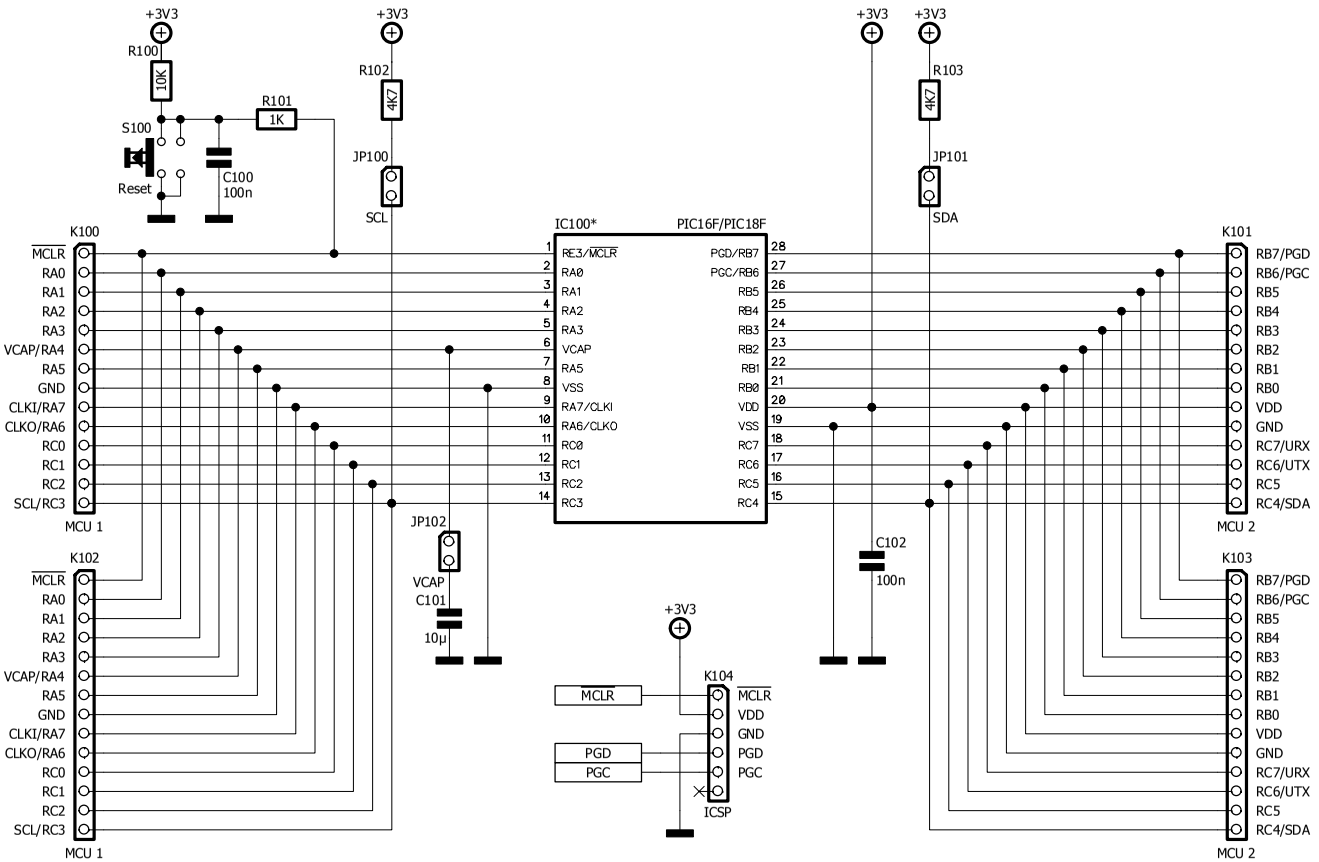

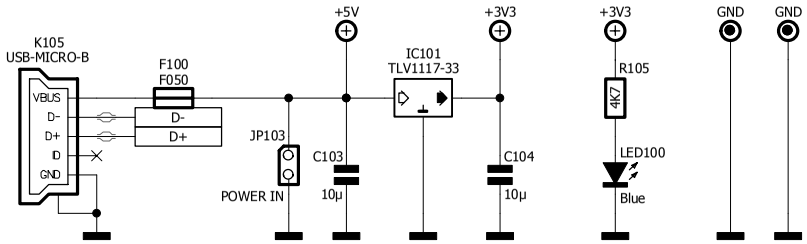

IC100*: Check the pinout for the desired MCU family.

http://creativecommons.org/licenses/by-sa/4.0/

http://www.tronix.io/		
PIC8-Bit Mini Trainer		
Power and MCU		
Sheet : 1/2	11/2020	Rev.A

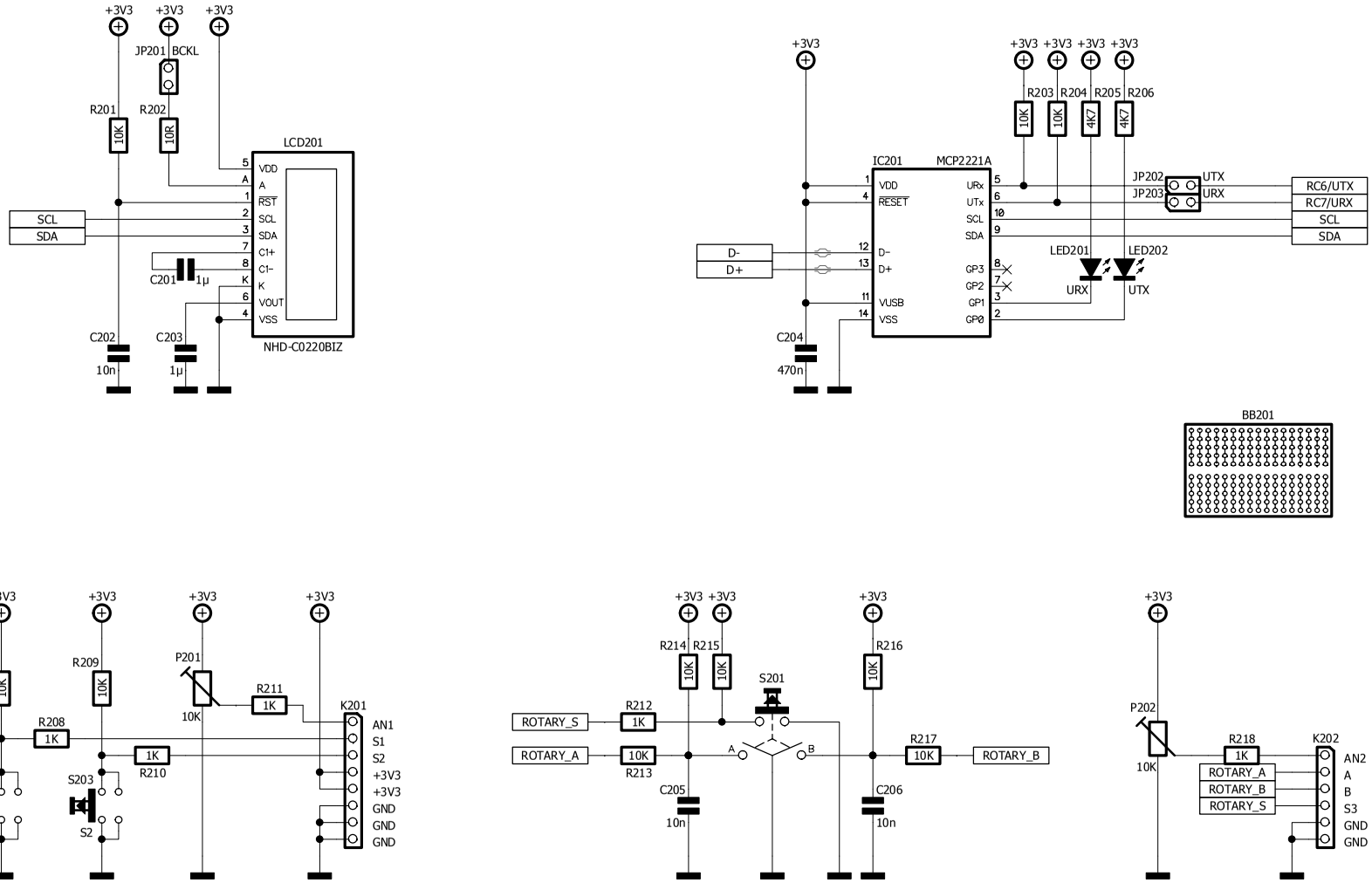

http://creativecommons.org/licenses/by-sa/4.0/

http://www.tronix.io/		
PIC8-Bit Mini Trainer		
HID		
Sheet : 2/2	11/2020	Rev.A