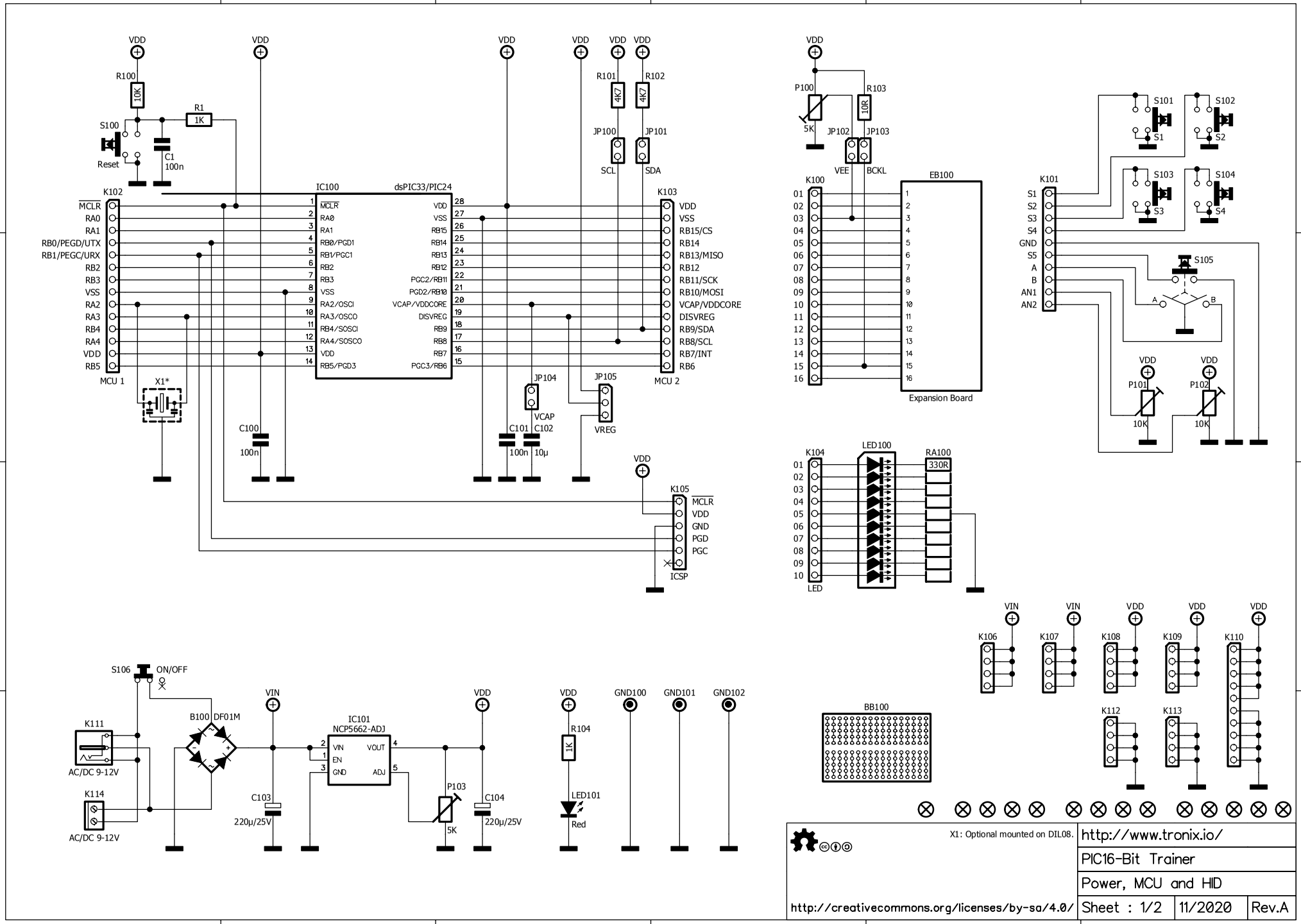
VDD
R100
10K
R1
1K
S100
Reset
C1
100n
K102
MCLR
RA0
RA1
RB0/PEGD/UTX
RB1/PEGC/URX
RB2
RB3
VSS
RA2
RA3
RB4
RA4
VDD
RB5
MCU 1
X1*
IC100
dsPIC33/PIC24
MCLR
RA0
RA1
RB0/PGD1
RB1/PGC1
RB2
RB3
VSS
RA2/OSCI
RA3/OSCO
RB4/SOSCI
RA4/SOSCO
VDD
RB5/PGD3
VDD
VSS
RB15
RB14
RB13
RB12
PGC2/RB11
PGD2/RB10
VCAP/VDDCORE
DISVREG
RB9
RB8
RB7
PGC3/RB6
C100
100n
R101
4K7
R102
4K7
JP100
JP101
SCL
SDA
JP104
VCAP
JP105
VREG
C101
100n
C102
10µ
K103
VDD
VSS
RB15/CS
RB14
RB13/MISO
RB12
RB11/SCK
RB10/MOSI
VCAP/VDDCORE
DISVREG
RB9/SDA
RB8/SCL
RB7/INT
RB6
MCU 2
K105
MCLR
VDD
GND
PGD
PGC
ICSP
P100
5K
R103
10R
JP102
JP103
VEE
BCKL
K100
EB100
Expansion Board
K101
S1
S2
S3
S4
GND
S5
A
B
AN1
AN2
S101
S102
S103
S104
S105
P101
10K
P102
10K
K104
LED
LED100
RA100
330R
K106
K107
K108
K109
K110
K112
K113
BB100
S106
ON/OFF
K111
AC/DC 9-12V
K114
AC/DC 9-12V
B100
DF01M
VIN
C103
220µ/25V
IC101
NCP5662-ADJ
VIN
EN
GND
VOUT
ADJ
P103
5K
C104
220µ/25V
R104
1K
LED101
Red
GND100
GND101
GND102
X1: Optional mounted on DIL08.
http://creativecommons.org/licenses/by-sa/4.0/
http://www.tronix.io/
PIC16-Bit Trainer
Power, MCU and HID
Sheet : 1/2
11/2020
Rev.A

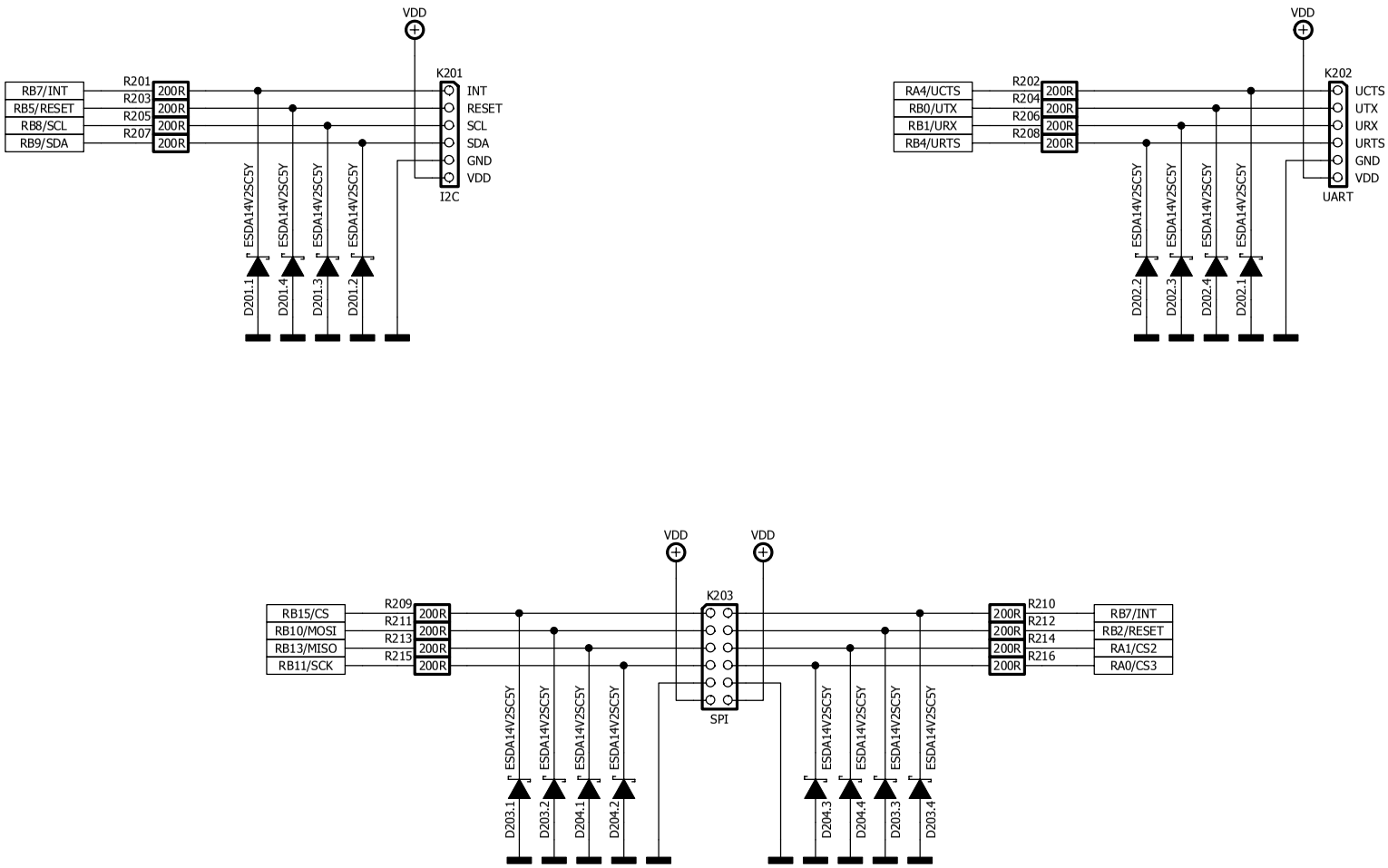

On this sheet all components are optional.

http://creativecommons.org/licenses/by-sa/4.0/

http://www.tronix.io/		
PIC16-Bit Trainer		
Modules		
Sheet : 2/2	11/2020	Rev.A