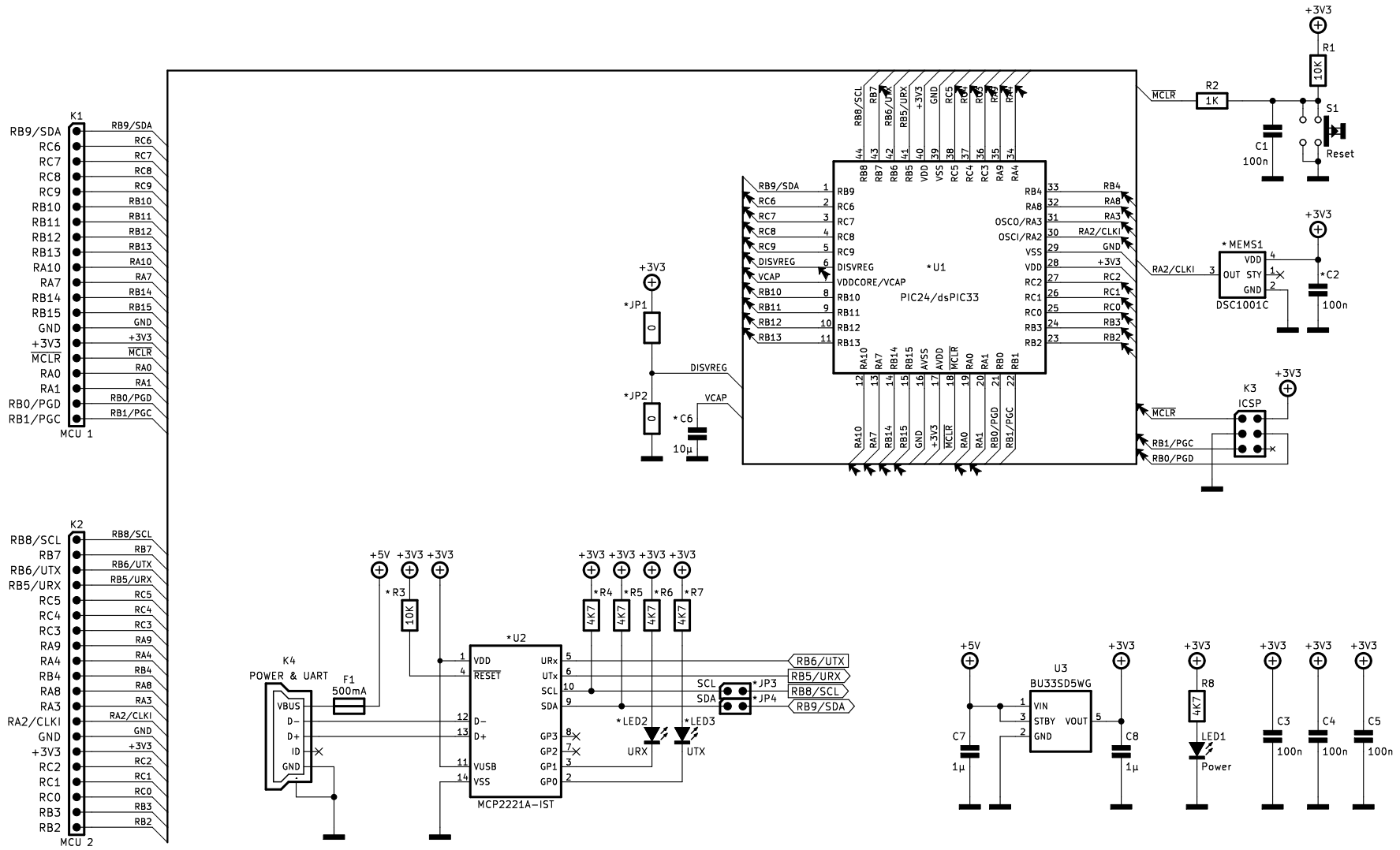

*U1: Check the pinout for the desired MCU family.
*C6: Optional check MCU datasheet.
*JP1/*JP2: Check MCU datasheet for Selection.
*MEMS1/*C2: Optional check MCU datasheet for values.
*R2/*R3/*JP3/*JP4: I2C Optional components.
*R1/*R4/*R5/*LED2/*LED3/*U2: EUSART Optional components.

https://creativecommons.org/licenses/by-sa/4.0/

https://www.tronix.io/

PIC16-Bit Nano Trainer

Sheet:1/1 | 01/2022 | Rev.A