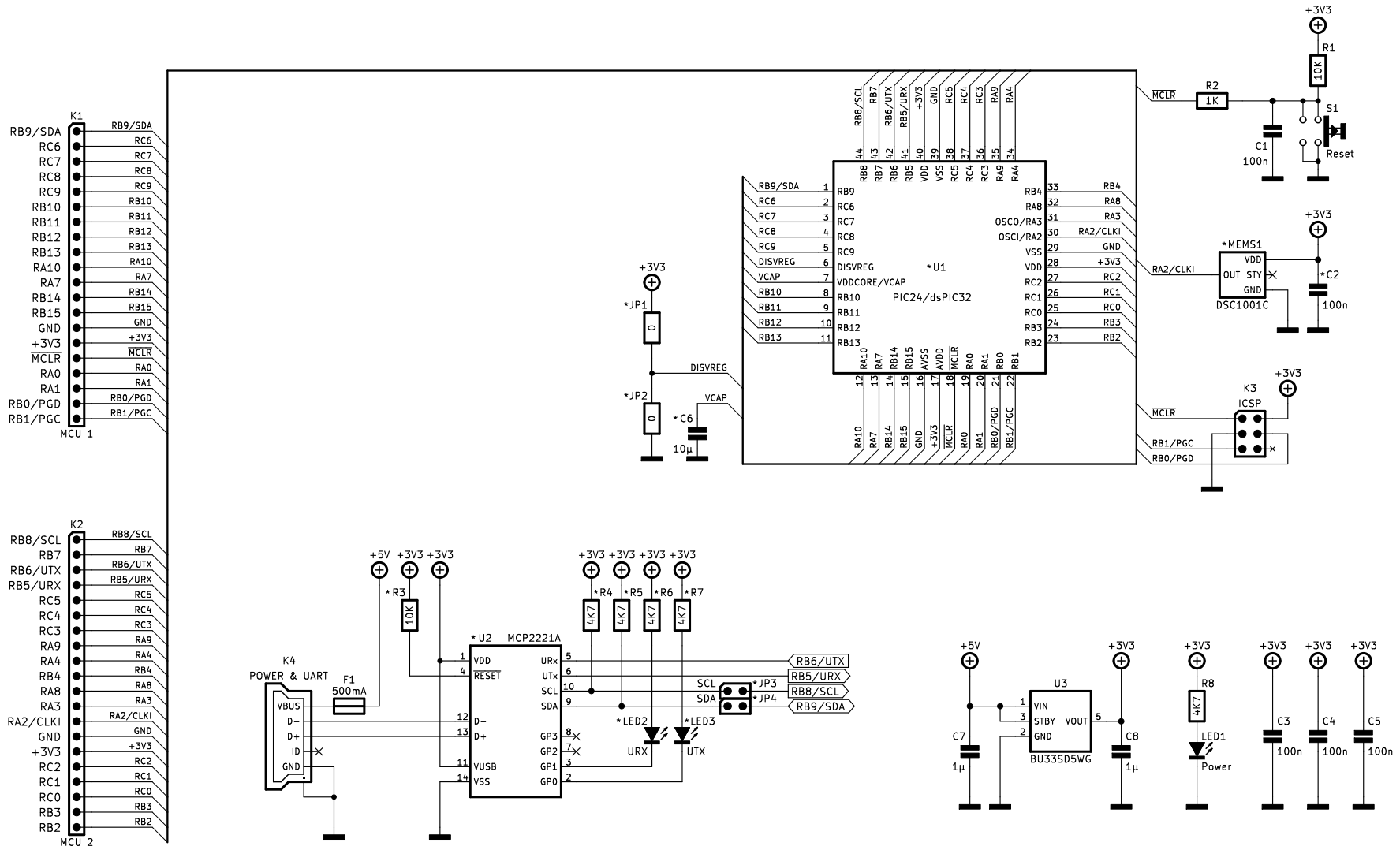

*U1: Check the pinout for the desired MCU family.
*C6: Optional check MCU datasheet.
*JP1/*JP2: Check MCU datasheet for Selection.
*MEMS1/*C2: Optional check MCU datasheet for values.
*R4/*R5/*JP3/*JP4: I2C Optional components.
*U2/*R3/*R6/*R7/*LED2/*LED3: EUSART Optional components.

https://www.tronix.io/

PIC16-Bit Nano Trainer

https://creativecommons.org/licenses/by-sa/4.0/

Sheet:1/1 | 01/2022 | Rev.A