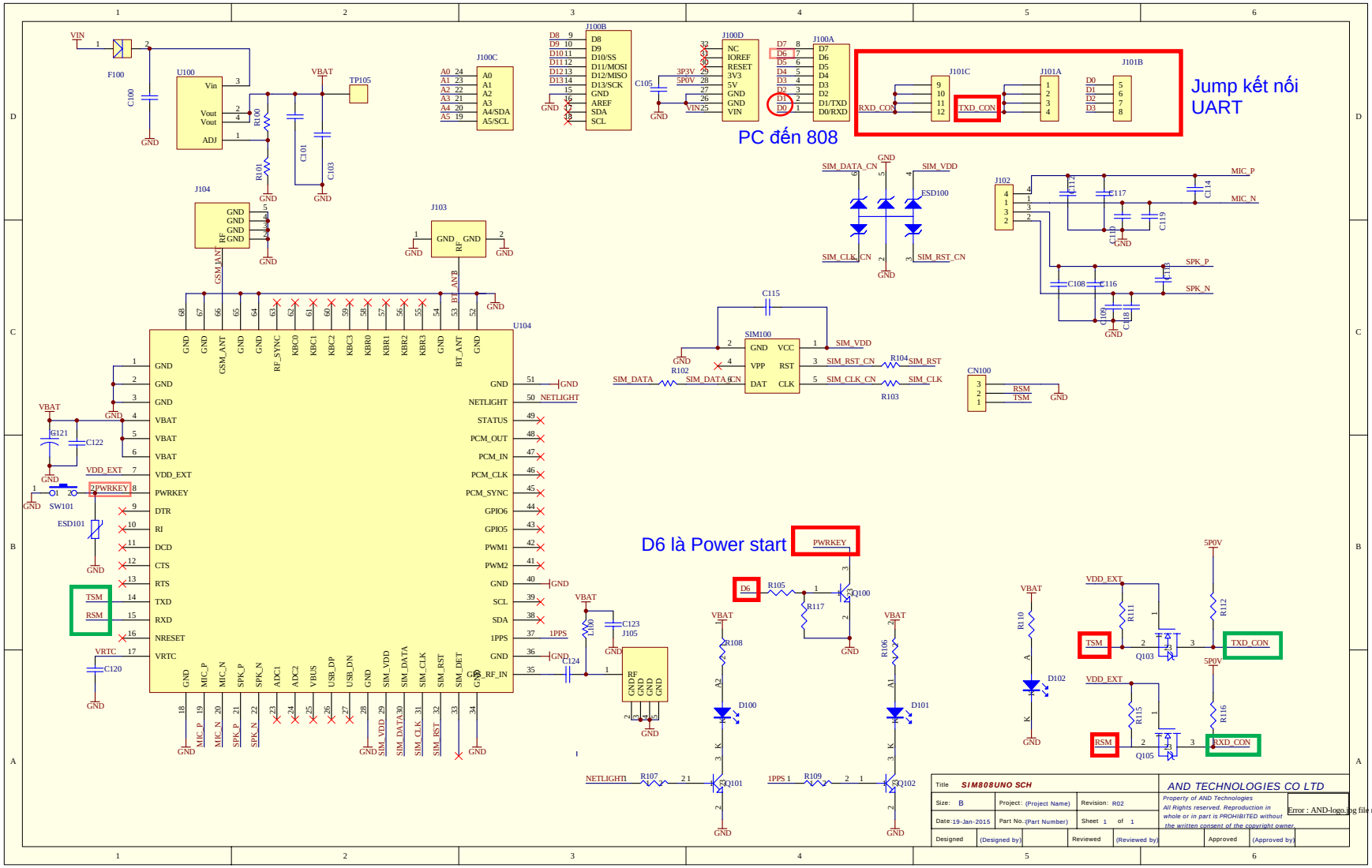
Jump kết nối UART
PC đến 808
D6 là Power start
PWRKEY
TSM
RSM
TXD_CON
RXD_CON
U104
U100
J100B
J100C
J100D
J100A
J101C
J101A
J101B
J104
J103
J102
CN100
SIM100
J105
Q100
Q101
Q102
Q103
Q105
D100
D101
D102
ESD101
SW101
F100
TP105
VIN
VBAT
5P0V
VDD_EXT
VRTC
MIC_P
MIC_N
SPK_P
SPK_N
SIM_VDD
SIM_DATA
SIM_CLK
SIM_RST
SIM_DET
NETLIGHT
STATUS
PCM_OUT
PCM_IN
PCM_CLK
PCM_SYNC
GPIO6
GPIO5
PWM1
PWM2
1PPS
NRESET
VDD_EXT
PWRKEY
DTR
RI
DCD
CTS
RTS
TXD
RXD
VRTC
GSM_ANT
BT_ANT
RF_IN
GND
AND TECHNOLOGIES CO LTD
Title SIM808UNO SCH
Size: B
Project: (Project Name)
Revision: R02
Date: 19-Jan-2015
Part No. (Part Number)
Sheet 1 of 1
Designed (Designed by)
Reviewed (Reviewed by)
Approved (Approved by)
Property of AND Technologies
All Rights reserved. Reproduction in whole or in part is PROHIBITED without the written consent of the copyright owner.
Error : AND-logo.jpg file not found.