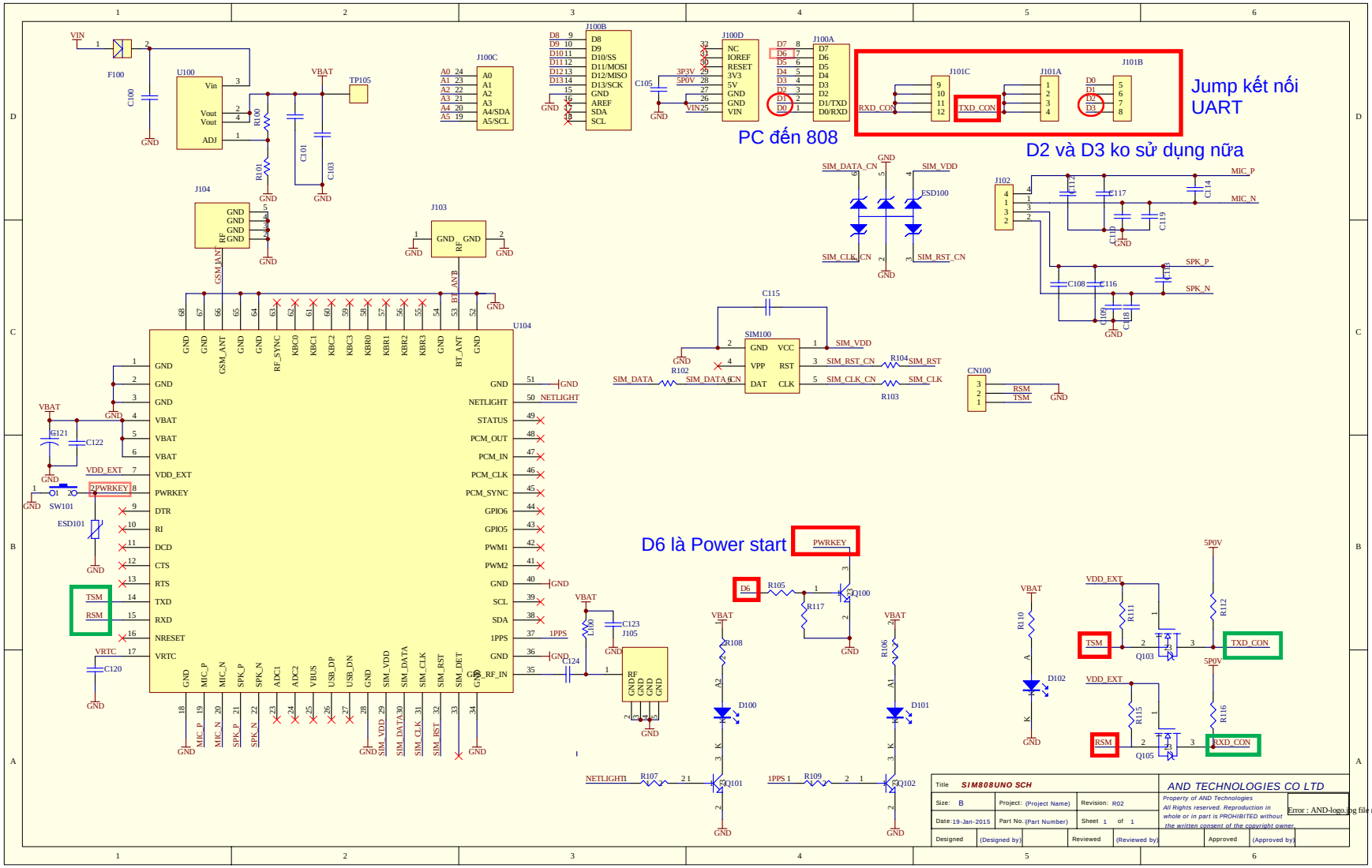
Jump kết nối UART
PC đến 808
D2 và D3 ko sử dụng nữa
D6 là Power start
U104
U100
J100A
J100B
J100C
J100D
J101A
J101B
J101C
J102
J103
J104
J105
SIM100
CN100
SW101
ESD101
ESD100
TP105
F100
TSM
RSM
PWRKEY
TXD_CON
RXD_CON
MIC_P
MIC_N
SPK_P
SPK_N
SIM_VDD
SIM_CLK
SIM_RST
SIM_DATA
NETLIGHT
VBAT
VDD_EXT
5P0V
Title SIM808UNO SCH
Size: B
Project: (Project Name)
Revision: R02
Date: 19-Jan-2015
Part No. (Part Number)
Sheet 1 of 1
Designed (Designed by)
Reviewed (Reviewed by)
Approved (Approved by)
AND TECHNOLOGIES CO LTD
Property of AND Technologies
All Rights reserved. Reproduction in whole or in part is PROHIBITED without the written consent of the copyright owner.
Error : AND-logo.jpg file not found.