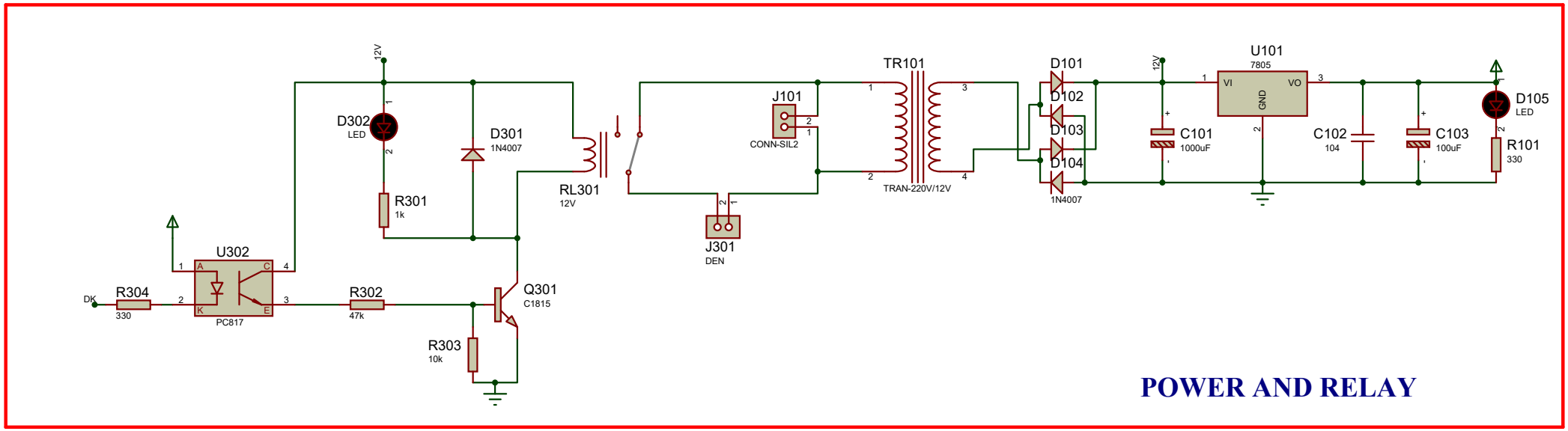

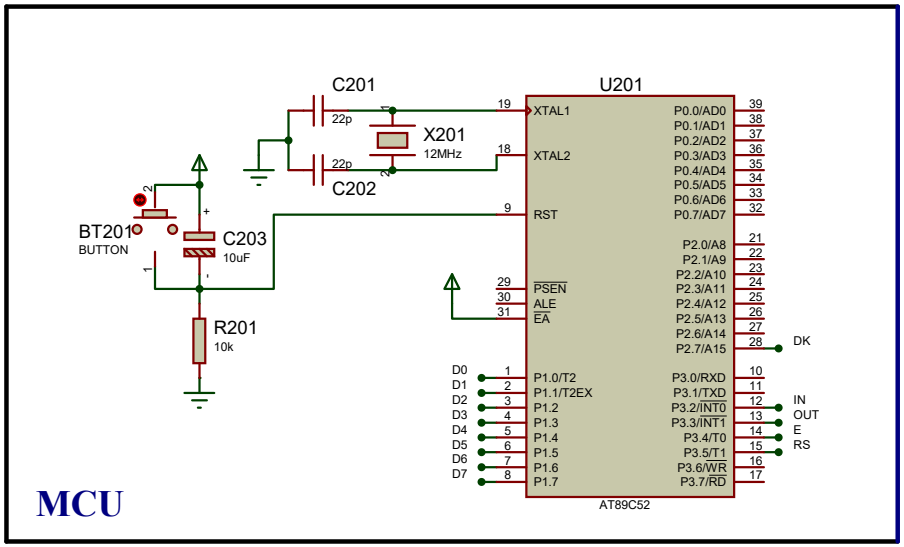

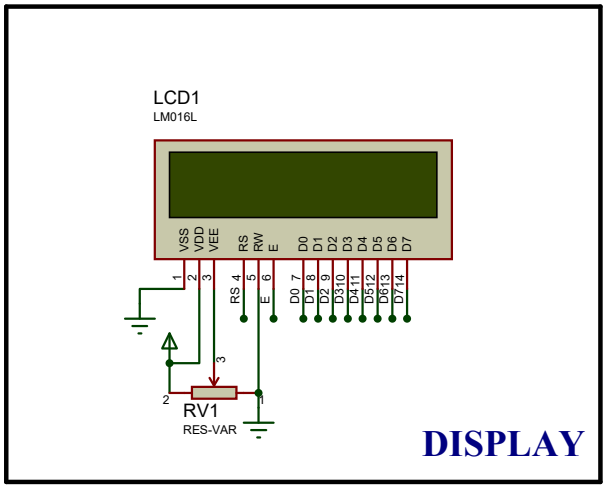

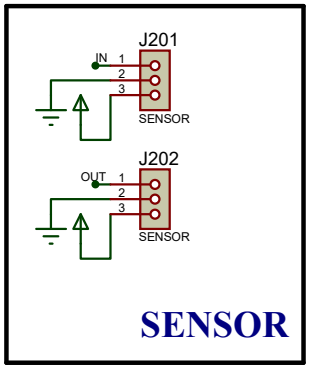

FILE NAME:	AUTOMATICLIGHT.pdsprj		DATE: 12/2/2020
DESIGN TITLE:	AUTOMATICLIGHT		PAGE: 1 of 1
PATH:	D:\EMBEDDED SYSTEM DESIGN\AUTOMATICLIGHT.pdsprj		
BY: Trung Nguyen		REV: Toan	TIME: 11:42:16 AM