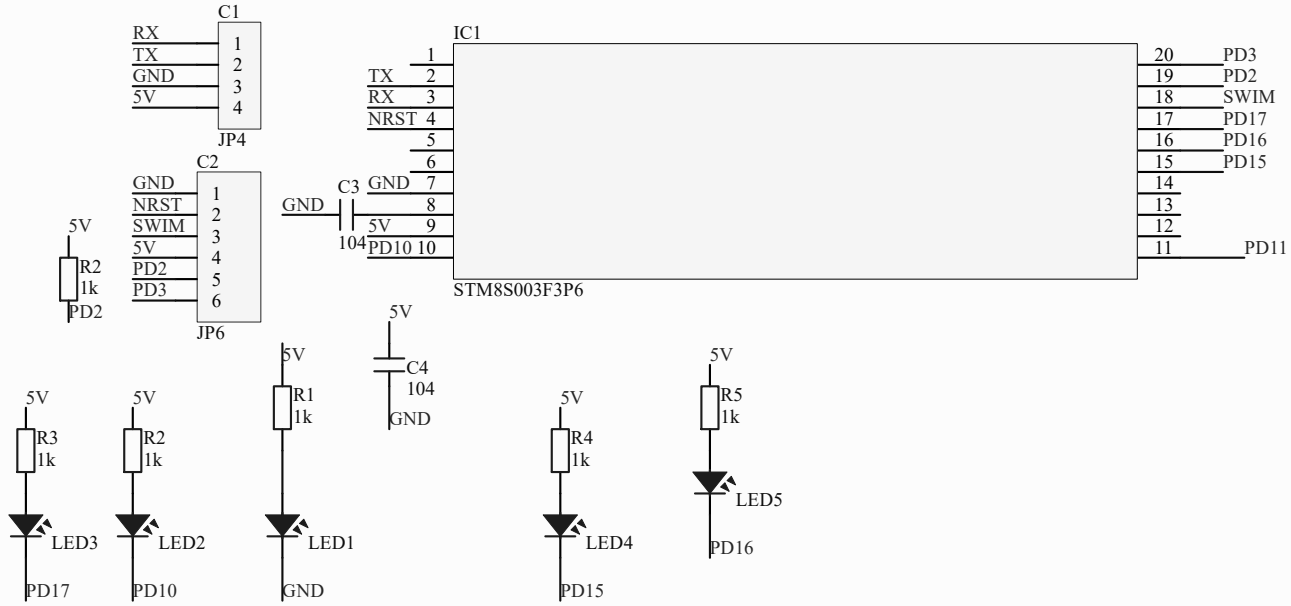

Title		
Size A	Number	Revision
Date: 3/7/2019	Sheet of	
File: D:\ProgramFile\..\Sheet1.SchDoc	Drawn By:	